W. C. STEWART.

LAST.

APPLICATION FILED DEC. 2, 1918.

1,432,217.

Patented Oct. 17, 1922.

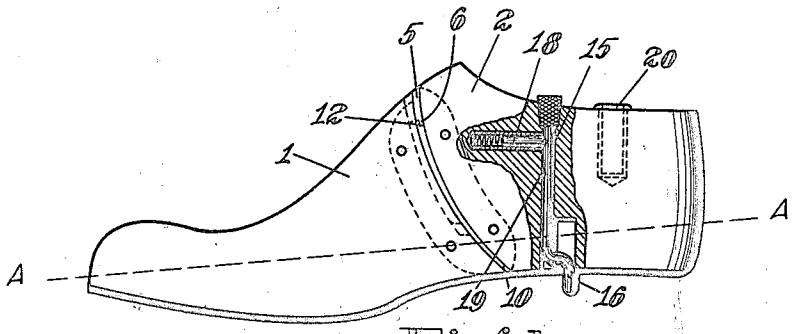

Fig. 1

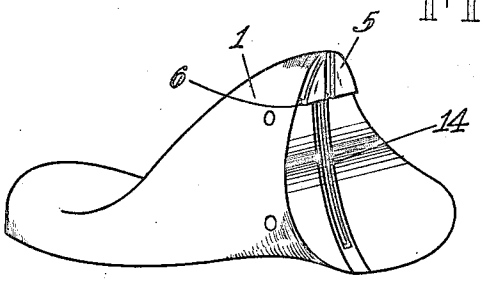

Fig. 2

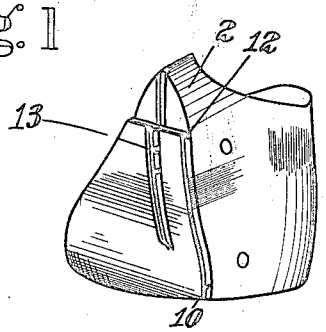

Fig. 3

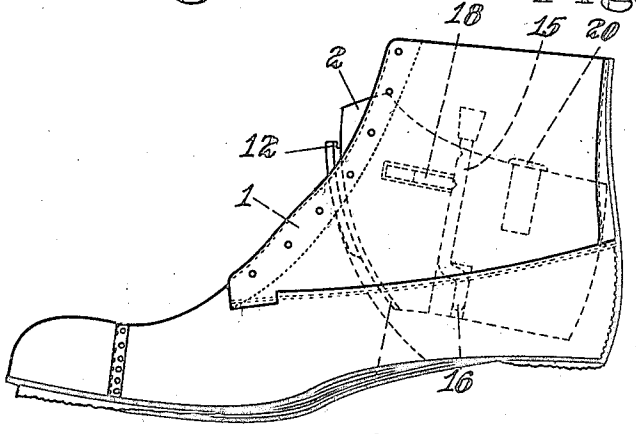

Fig. 4

INVENTOR

William C. Stewart

By his Attorney,

Robert Howard

Patented Oct. 17, 1922.

1,432,217

UNITED STATES PATENT OFFICE.

WILLIAM C. STEWART, OF SWAMPSCOTT, MASSACHUSETTS, ASSIGNOR TO UNITED SHOE MACHINERY CORPORATION, OF PATERSON, NEW JERSEY, A CORPORATION OF NEW JERSEY.

LAST.

Application filed December 2, 1918. Serial No. 264,953.

To all whom it may concern:

Be it known that I, WILLIAM C. STEWART, a subject of the King of England, residing at Swampscott, in the county of Essex and State of Massachusetts, have invented certain Improvements in Lasts, of which the following description, in connection with the accompanying drawings, is a specification, like reference characters on the drawings indicating like parts in the several figures.

This invention relates to divided lasts and more especially to separable lasts comprising foreparts and heel parts which are relatively separable as an incident of ordinary use. The principal object of the invention is to produce a last adapted to meet certain conditions of use among which may be mentioned adaptability for insertion with a stretching effect into a shoe upper having previously molded toe and heel ends; adaptability for securing retention of the forepart and the heel part in operative relation while the last is being subjected to the strain incident to the several shoemaking operations; and also adaptability for having the heel part removed from the shoe separately from the forepart prior to the heel attaching operation.

The various features of the invention incorporated in the illustrated embodiment thereof for the purpose of attaining the above and other objects will appear in connection with the following description of the last shown in the accompanying drawings and the invention will then be definitely pointed out in the claims.

Fig. 1 of the drawings is a side elevation of the last partly in section;

Fig. 2 shows the rear end face of the forepart;

Fig. 3 shows the front end face of the heel part; and

Fig. 4 shows the last partially inserted in a shoe.

The last is divided along a substantially circular cut that is swung about a point located above and behind the cut as a center. As illustrated, this cut intersects the instep of the last a short distance in front of the cone and intersects the tread face of the last slightly in front of the heel seat area. This division between the forepart 1 and heel part 2 is at such a point that the forepart may be inserted into a shoe upper having molded toe and heel ends and having an insole lying against the inturned toe and heel flanges and that then the heel part may be inserted by introducing its rear end within the upper slightly in advance of its front end and sliding its front end face along the curved rear end face of the forepart, as illustrated in Fig. 4, to wedge the heel part into position in the shoe. In this manner of introducing the heel part, the two ends of the last are caused to engage the two ends of the shoe and, as the two parts of the last are forced into final position, the upper is stretched longitudinally to a substantial extent but with slight effort. As the heel part moves to position, it rotates substantially about its upper rear corner. It is thus not obliged to slide down along the rear end of the upper with consequent friction and liability of disarranging the shoe lining. To facilitate this introductory and shoe-stretching movement of the heel part and to afford suitable mounting for bonding means, the meeting faces of the forepart and the heel part are provided with metallic plates formed to slide easily in contact with each other. These plates may be used as templates in scouring or finishing the last parts. The plate 5 attached to the forepart has a downwardly extending hook or finger 6 and the plate 10 attached to the rear part has a similar upwardly extending hook or finger 12. These co-operating hooks or fingers 6, 12 constitute bonding means for holding the heel part and forepart in register while the last is in the shoe. This bonding means is preferably supplemented by an approximately vertical rib 13 on the heel part plate 10 which finds guidance in a groove 14 in the forepart plate 5 and insures the correct lateral relation of the two parts of the last.

It will be observed that the bonding means lies entirely above the longitudinal axis of the last, represented by the line A—A in Fig. 1, and relatively close to the top of the last. Such location has, among others, the great practical advantage that the last is relatively strong to resist the heavy transverse pressure to which it is subjected in certain shoemaking operations, notably sole leveling. In that operation the shoe is usually supported in inverted posi-

tion in a jack which engages the shoe at two points respectively adjacent to the toe and heel while the leveling roll or other leveling means exerts pressure upon the sole. The last therefore acts as a beam so that the abutting faces of the forepart and heel part adjacent to the tread face are pressed together while they tend to separate adjacent to the cone of the last. This tendency to separate is most effectively resisted by locating the bonding means 6, 12 relatively close to the cone of the last and this is an important feature of the present invention.

It will be observed further that with this construction it is necessary to depress the heel part slightly beyond its position of registration with the forepart as shown in Fig. 1 in order that the hook 12 may engage the hook 6 after which the elasticity of the stretched upper will cause the hooks to interlock as the heel part is permitted to rise to registration with the forepart. The bonding means permits free movement of the heel part downwardly from registration with the forepart and in practice, when it is desired to remove the heel part from the shoe, it is pressed downwardly within the shoe slightly but far enough to enable the heel part and forepart to be sprung away from each other near their upper edges until the finger 12 passes out from under the finger 6 in a position to rise along the plate 5. This forms a very simple and inexpensive bonding means which locks the heel part against movement upwardly relatively to the forepart during the process of manufacture of the shoe but allows the heel part freedom of movement downwardly when the last is to be removed.

The importance of the location of the bonding means near the periphery of the last, which is an important feature of the invention, will now be readily manifest. The separable last, broadly speaking, is not novel, but no such last has ever appeared in actual shoemaking practice because none has ever been found which would operate easily and reliably. A last for machine shoemaking must be firm, and at the same time the bonding mechanism of a separable last must be simple and so easily operated as to be even loose. The removal of a heel part from a shoe without disturbance of the forepart requires a last the bonding mechanism of which is very easy to operate, and accessible from the top of the shoe so that the reason for any failure to operate can be readily ascertained.

The construction shown is peculiarly well adapted to this problem. In the first place, the bonding mechanism is in the cone of the last, as near as may be to the periphery, where an easy inspection will show whether it is hooked or unhooked and the nature of any difficulty present. This location also makes the operation of the bonding means more simple than in any previously proposed last of this type. The last being inverted on a jack, the operator, in case the forepart does not readily slide on the heel part to disengage the hooks, will press down on the toe of the shoe. The joint between the last parts will then open from the bottom of the last, the requisite movement being permitted by a slight longitudinal stretch of the shoe upper. The forepart and heel part are then in engagement only at the hooks 6 and 12 and the small area above them, and at the upper part of the rib and slot 13, 14 (in case these parts are present), and the normal looseness of the parts will permit a certain amount of twisting and rocking play which can be utilized by the operator in working the two hooks out of engagement, after which the lifting of the toe (the shoe being still inverted, of course) by the operator enables the hooks to pass each other and the shoe and forepart are slipped up and over the heel part which is left on the jack. There is a considerable advantage in this type of relative movement between the shoe and the heel part, since the lower and widest portion of the heel part passes through the shoe by a forward and upward or a backward and downward movement, and thus does not have to force its way through the upper rear counter portion of the shoe, where the counter is narrowest and stiffest.

The location of the bonding means near the top of the last also permits advantage to be taken of the comparative looseness of a lasted or formed upper at this point, since any longitudinal relative movement between the bonding members which may be requisite for the operation of the bonding mechanism can be more easily effected at this point than at any other.

In short, the location of the bonding means at the periphery of the last affords greater opportunity for manipulation in preparation for collapse than would be the case if it were located at the center or so as to cover a considerable area, with the same clearance or looseness of parts, since any leverage of one last part on the other produces its maximum effect at the periphery, and the location of the bonding means in the upper part of the last provides further for ample strength in resistance of machine shoemaking stresses with minimum size of bonding parts (the tension of the formed upper supplying the small stress requisite to hold the parts steady in the shoe) and also permits ready inspection and correction of any accidental difficulty. Further, the formation of the bonding members integral with the last parts makes them relatively disengageable by a mere relative movement of the last parts, the operator not being

obliged to grope after and to adjust movable parts.

The last may be provided with any suitable or usual thimble 20. The particular last herein illustrated is well adapted for use in practising a radically new method of making shoes which is disclosed in another application for United States Letters Patent Serial No. 252,628, Warren, filed September 4, 1918, and owned by the assignee of the present application. To that end, the heel part of the last is provided with a sliding pin 15 having a head located at the cone of the last and its opposite end at the heel seat of the last. The pin is offset near its heel seat end at 16, the last being recessed to permit movement of said offset portion in the direction of the height of the last. The heel part of the last is provided also with a spring-pressed plunger 18 adapted to seat itself in either one of two notches 19 in the pin 15 for yieldingly holding the pin at either extremity of its lengthwise movement. When the pin is in the position shown in Fig. 1, it projects from the heel seat face of the last in position to engage a hole in the insole or in general to co-operate with position-determining surfaces on the shoe parts and assist in securing predetermined positioning of such parts relatively to one another and to the last. The pin 15 may be moved upwardly to disengage it from the shoe parts and withdraw such resistance as it would otherwise offer to the removal of the heel part of the last from the shoe.

Having explained the nature of this invention and described a preferred embodiment thereof, I claim as new and desire to secure by Letters Patent:

1. A divided last having a bonding means lying entirely substantially above the longitudinal axis of the last, the joint surfaces of the last parts below the longitudinal axis having no members uniting the last parts, whereby the heel part may slip easily over the forepart while being inserted in or removed from a shoe.

2. A divided last having a separable bonding means lying entirely within the upper third of the instep portion of the last, the joint surfaces of the last parts below the bonding means having no members uniting the last parts, whereby the heel part may slip easily over the forepart while being inserted in or removed from a shoe.

3. A divided last having a heel part constructed and arranged for insertion in and removal from the shoe while the forepart is in the shoe, the said parts being divided along a downwardly and backwardly extending cut, and a bonding means lying entirely in the cone portion of the last, constructed and arranged to be engaged and disengaged by a slight relative movement of the last parts from extended position.

4. A divided last having its bonding means lying entirely within the upper third of the instep portion of the last, and abutting surfaces on the heel part and forepart below the longitudinal axis of the last constructed and arranged to support the last in extended position under the pressure of a leveling machine.

5. A divided last having a bonding means constructed and arranged to lock the heel part against movement upward from normal position relatively to the forepart while allowing the heel part freedom of movement downward from normal position relatively to the forepart.

6. A last divided along a downwardly and backwardly extending cut and having a bonding means constructed and arranged to engage and come into locked position as the heel part rises to registration with the forepart.

7. A last divided along a downwardly and backwardly extending cut and having a bonding means constructed and arranged to engage and come into locked position as the heel part moves in one direction to registration with the forepart, but to permit free movement of the heel part in the opposite direction away from registration with the forepart.

8. A last divided along a substantially circular cut swung about a point above and behind the cut as center, and having a bonding means constructed and arranged to engage and hold the heel part as it rises to registration with the forepart.

9. A last divided along a substantially circular cut swung about a point above and behind the cut as center, and having a bonding means constructed and arranged to engage and hold the heel apart as it rises to registration with the forepart, but to permit free movement of the heel part downward from registration with the forepart.

10. A last divided along a downwardly and backwardly extending cut, and having a bonding means constructed and arranged to stop the heel part as it rises and to hold it in registration with the forepart and to be disengaged while the last is in a shoe whereby the heel part may rise from registration with the forepart.

11. A last divided along a downwardly and backwardly extending cut, and having a separable bonding means constructed and arranged to stop the heel part as it rises and to hold it in registration with the forepart and to be disengaged while the last is in a shoe whereby the heel part may rise from registration with the forepart.

12. A last divided along a downwardly and backwardly extending cut, and having a bonding hook constructed and arranged to stop the heel part as it rises and to hold it in registration with the forepart and to be

disengaged while the last is in a shoe whereby the heel part may rise from registration with the forepart.

13. A last divided along a downwardly and backwardly extending cut and having on the adjacent faces of the forepart and heel part thus formed vertical interengaging rib and groove formation and transverse interlocking hook or finger formations combined to give the last parts stability in their normal relation.

14. A last divided along a downwardly and backwardly extending cut and having on the adjacent faces of the forepart and heel part plates which are formed to present a downwardly facing hook and an upwardly facing cooperative hook to retain the heel part against upward displacement and are further formed to present an interengaging rib and groove to maintain the parts in lateral relation.

15. A divided last having a forepart, a heel part constructed and arranged for insertion in and removal from the shoe while the forepart is in the shoe, and a bonding means constructed and arranged to hold the last parts in extended postion in the shoe under the stresses of machine shoemaking, and to be disengaged merely by a relative movement of the last parts from extended position.

16. A separable last having a bonding mechanism comprising solely a vertically directed hook on each last part, said hooks being located near the periphery of the last.

17. A separable last having a bonding mechanism comprising solely two oppositely directed hooks, one on each last part, located as nearly as practicable at the periphery of the last.

18. A separable last having a heel part and a forepart, having normally contacting secant faces, and a bonding mechanism comprising a hook located at the periphery of the last, the remainder of the secant faces of the last parts being free from mechanism uniting the last parts, whereby the operation of the bonding mechanism is rendered easier.

19. A collapsible last having a bonding mechanism comprising overlapping members, one in each last part, constructed and arranged to be disengaged by a relative movement longitudinally of the last to permit collapse of the last, said overlapping members being located in the upper part of the last whereby the comparative looseness of the upper at this point may facilitate collapsing movement.

20. A collapsible last having a bonding mechanism comprising members, one in each last part, constructed and arranged to be disengaged by a relative movement longitudinally of the last to permit collapse of the last, said members being located in the upper part of the last whereby the comparative looseness of the upper at this point may facilitate collapsing movement.

21. A separable last consisting of a heel part and a forepart and a bonding mechanism consisting solely of two oppositely directed hooks, constructed and arranged to hold the last parts in operative position in the shoe under the stresses of machine shoemaking.

22. A separable last consisting of a heel part and a forepart and a bonding mechanism consisting solely of two oppositely directed hooks, constructed and arranged to hold the last parts in operative position in the shoe under the stresses of machine shoemaking and to be disengaged while the last is in the shoe by relative movement of the heel part and the forepart.

23. A separable last consisting of a heel part and a forepart divided by a cut extending generally upward and forward and a bonding mechanism consisting solely of two oppositely directed hooks, constructed and arranged to hold the last parts in operative position in the shoe under the stresses of machine shoe making.

24. A separable last consisting of a heel part and a forepart divided by a cut extending generally upward and forward and a bonding mechanism consisting solely of two oppositely directed hooks, constructed and arranged to hold the last parts in operative position in the shoe under the stresses of machine shoemaking and to be disengaged while the last is in the shoe by relative movement of the heel part and the forepart.

In testimony whereof I have signed my name to this specification.

WILLIAM C. STEWART.