March 20, 1962 W. F. STROUD 3,026,107

COLLATING APPARATUS FOR PRINTING MACHINES

Filed March 25, 1960 4 Sheets-Sheet 1

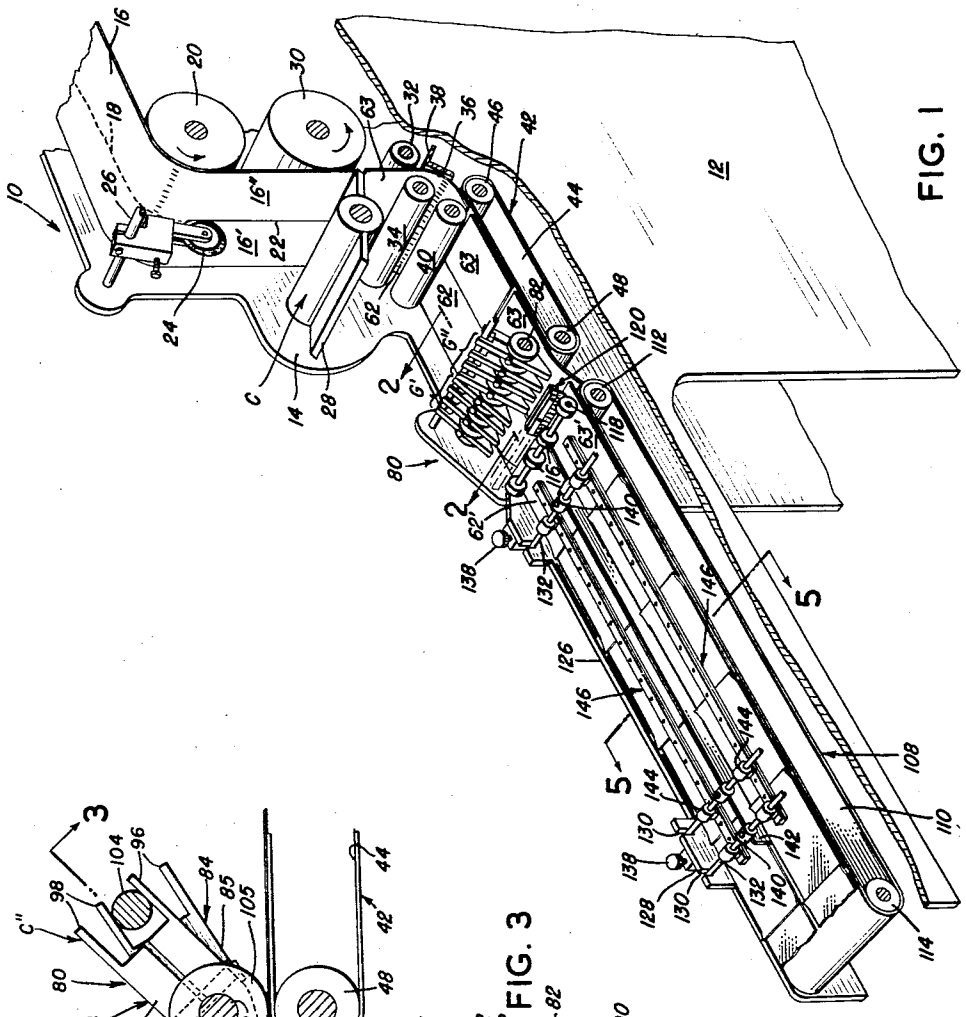

FIG. 1

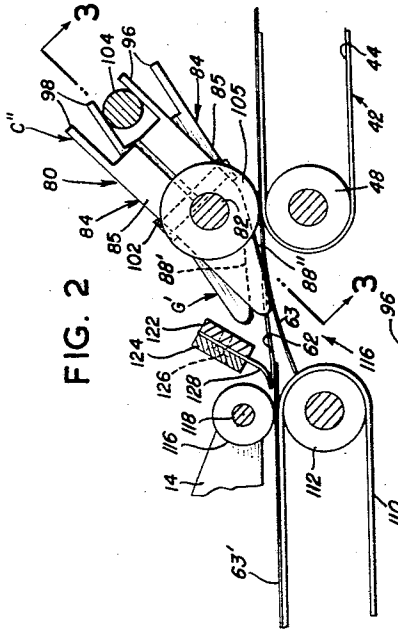

FIG. 2

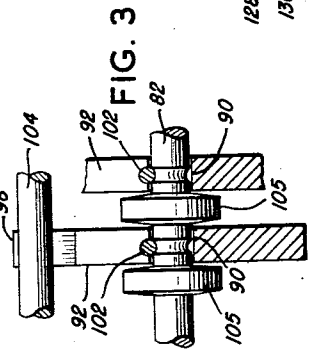

FIG. 3

INVENTOR
WILLIAM F. STROUD

BY: Frederick C. Bromley
ATTORNEY

March 20, 1962 W. F. STROUD 3,026,107

COLLATING APPARATUS FOR PRINTING MACHINES

Filed March 25, 1960 4 Sheets-Sheet 2

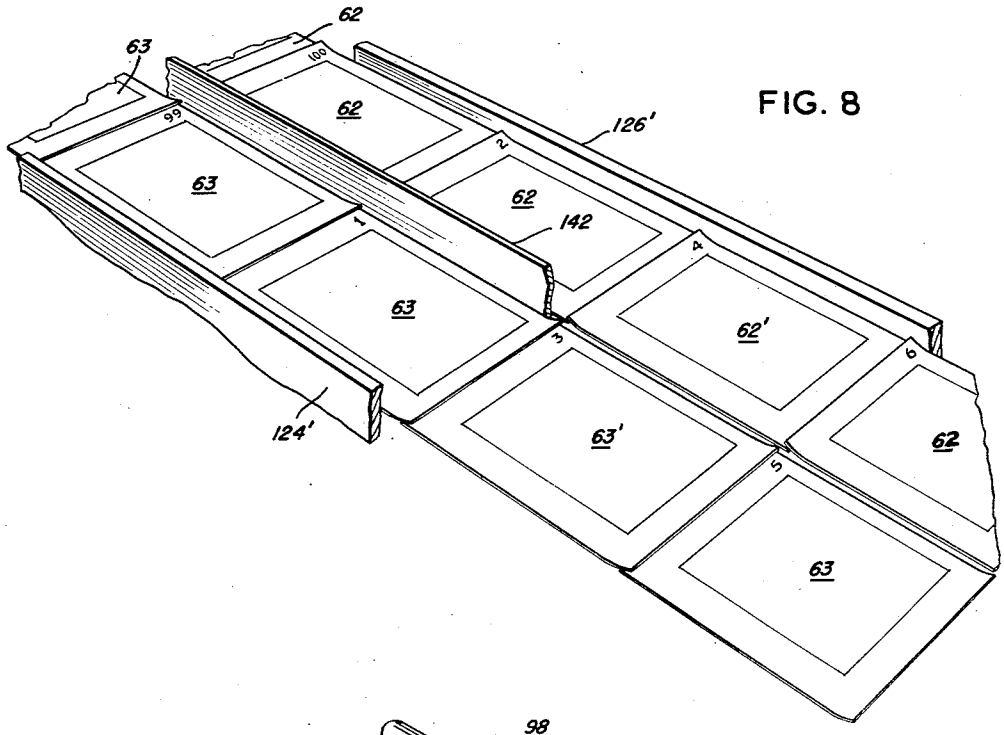

FIG. 8

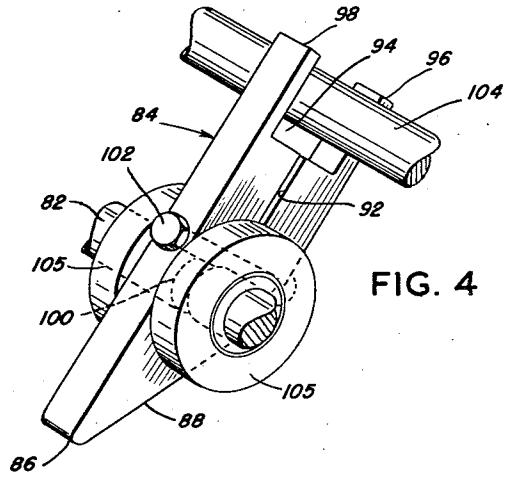

FIG. 4

INVENTOR
WILLIAM F. STROUD

BY: Frederick C. Bromley

ATTORNEY

March 20, 1962 W. F. STROUD 3,026,107

COLLATING APPARATUS FOR PRINTING MACHINES

Filed March 25, 1960 4 Sheets-Sheet 3

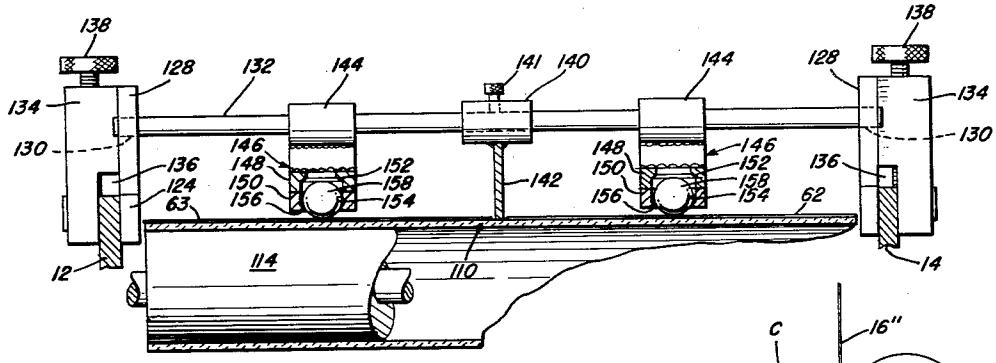

FIG. 5

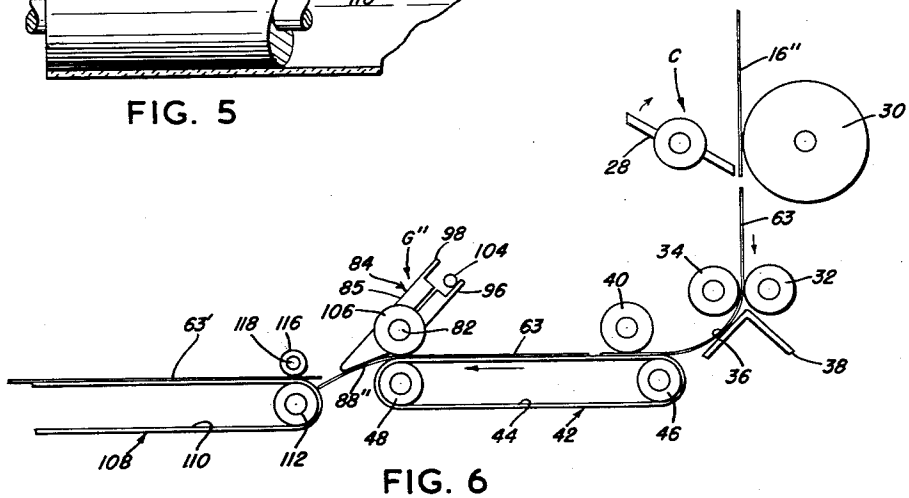

FIG. 6

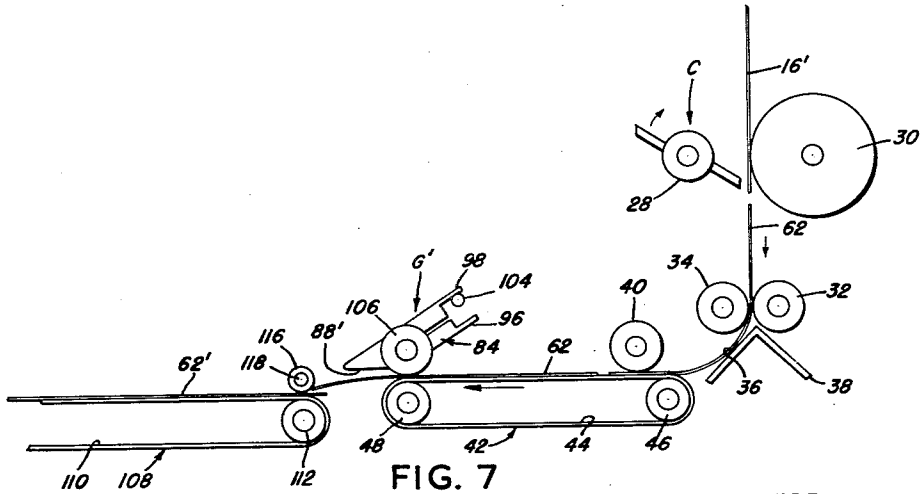

FIG. 7

INVENTOR
WILLIAM F. STROUD

BY: Frederick C. Stanley
ATTORNEY

March 20, 1962 W. F. STROUD 3,026,107

COLLATING APPARATUS FOR PRINTING MACHINES

Filed March 25, 1960 4 Sheets-Sheet 4

FIG. 10a

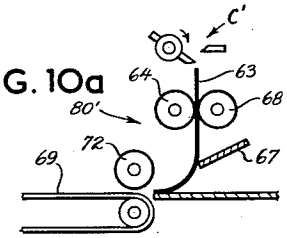

FIG. 10b

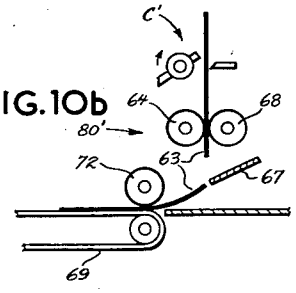

FIG. 10c

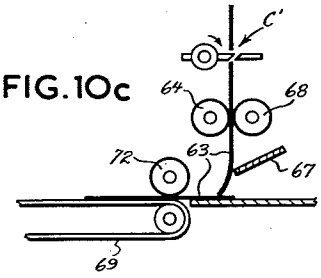

FIG. 10d

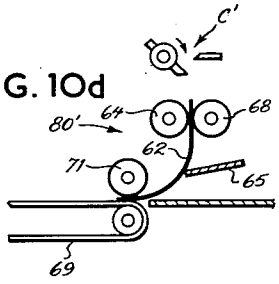

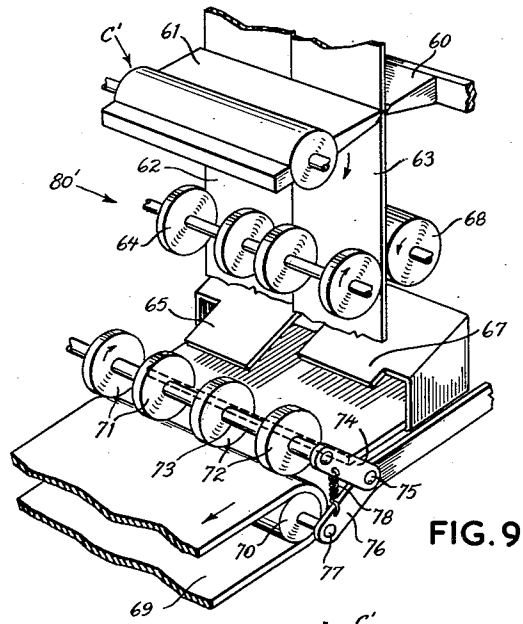

FIG. 9

FIG. 10e

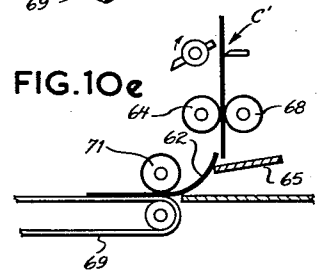

FIG. 10f

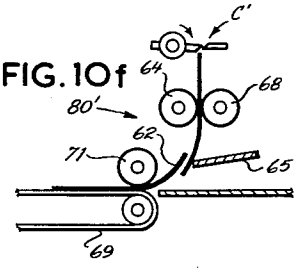

INVENTOR
WILLIAM F. STROUD

BY Frederick C. Bromley
ATTORNEY

United States Patent Office 3,026,107 Patented Mar. 20, 1962

3,026,107

COLLATING APPARATUS FOR PRINTING MACHINES

William F. Stroud, McKellar, Ontario, Canada, assignor of one-third to Edward A. Stroud, Toronto, Ontario, and one-third to Edith Bridgeman, Mimico, Ontario, Canada

Filed Mar. 25, 1960, Ser. No. 17,668
5 Claims. (Cl. 270—58)

This invention relates generally to printing machines, and more particularly to a novel collating apparatus, and comprises a continuation-in-part of applicant's co-pending application Serial Number 758,307 filed September 2, 1958, titled Printing Machine and issued as United States Letters Patent 2,930,318 on March 29, 1960.

The type of printing machine in which one embodiment of the novel collating apparatus of the invention is used is described in detail in U.S. Letters Patent 2,930,318 and reference may be had thereto for particulars. Briefly, the printing machine includes structure for printing on both sides of a web of paper using one set of printing plates for continuously printing two copies of a book or the like. The printed web is slit longitudinally and the strips formed are transversely cut into sheets for forming separate pages which are collated, i.e. arranged in sequential order with succeeding pages overlapped or underlapped at adjacent ends. On the printing machine of the type mentioned, the pages of the two copies of the book, magazine, etc. are reversely inverted at the collating apparatus, i.e. one copy is presented face down and the other is presented face up. The orientation of the pages of the two copies resulted in the problem of providing collating apparatus which will simultaneously "undertuck" and "overtuck" the leading edge of adjacent successive sheets of printed material with respect to proceeding sheet, where the printing on the adjacent sheets is reversely related.

A primary object of this invention is to provide novel collating apparatus for a printing machine.

Another object of the invention is to provide novel collating apparatus for a printing machine which continuously prints more than one copy of printed matter and wherein the sheets of the printed matter are reversed with respect to each other to require "undertucking" of adjacent edges of one series of sheets and "overtucking" of another series of sheets in order to orient the pages of the similar copies of material in their proper order.

A further object of the invention is to provide collating apparatus for automatic printing apparatus which permits sequentially printed pages of separated sheets to be piled in the sequence in which they are printed and collated in the proper order for subsequent assembly.

A still further object of the invention is to afford collating apparatus for an automatic printing machine which continuously produces two copies of a work with the pages reversely oriented with respect to each other.

Another object of the invention is to provide novel hold-down means for collated sheets being delivered from collating apparatus.

Other objects and the nature and advantages of the instant invention will be apparent from the following description taken in conjunction with the accompanying drawings, wherein a preferred embodiment of the invention is disclosed.

In the drawings—

FIGURE 1 is a fragmentary view of a printing machine for producing two copies of a work, showing portions broken away and sectioned for clarity, showing the novel collating apparatus in relation to a slitter and sheet severing device of the machine;

FIGURE 2 is an enlarged fragmentary longitudinal section taken substantially on line 2—2 of FIGURE 1, showing details of the sheet orienting means of the collator;

FIGURE 3 is a fragmentary section taken substantially on line 3—3 of FIGURE 2;

FIGURE 4 is an enlarged fragmentary perspective view showing one of the guide fingers and associated flanking rollers of the collator;

FIGURE 5 is an enlarged transverse section taken substantially on line 5—5 of FIGURE 1, with portions broken away and in section, showing details of sheet hold-down means of the apparatus;

FIGURE 6 is a diagrammatic side elevational view of the collator apparatus illustrating the manner in which the leading edge of a trailing sheet is "undertucked" beneath the trailing edge of a proceeding sheet;

FIGURE 7 is a view similar to FIGURE 6, showing how the leading edge of a trailing sheet is "overtucked" above the trailing edge of a proceeding sheet;

FIGURE 8 is an enlarged fragmentary perspective view of the delivery end of the apparatus, with portions broken away and sectioned, and illustrating collated sheets of two separate similar works where the printing is respectively inverted;

FIG. 9 is a fragmentary perspective view similar to a portion of FIGURE 1, showing another embodiment of collating apparatus of the invention;

FIGURES 10*a* through 10*c* are diagrammatic side elevational views progressively illustrating the collator of FIGURE 9 and the manner in which successive sheets are collated to "overtuck" the leading edge of a trailing sheet on the trailing edge of a proceeding sheet; and

FIGURES 10*d* through 10*f* are diagrammatic views similar to FIGURES 10*a* through 10*c*, respectively, and illustrating how successive sheets are "undertucked."

Referring to the drawings in detail and to United States Letters Patent 2,930,318, the printing machine with which the novel collating apparatus is used affords means whereby the pages for two books or the like may be printed at one time on opposite sides of a web and extend longitudinally therealong. The web is slit longitudinally and pages are separated by transverse cuts and finally the pages are properly collated or oriented in preparation for subsequent manufacturing or assembly procedures.

The subsequent embodiments to be described are presented for the purpose of illustration according to the statutory requirements and not for purposes of limitation, and all modifications may be resorted to as fall within the scope of the invention as encompassed in the claims.

Considering FIGURE 1, a fragmentary portion of a printing machine of the character involved is indicated generally at **10** and comprises a pair of spaced, substantially similar vertical side frame members **12** and **14** which are partially broken away for purposes of clarity. A continuous web **16** has printed on opposite sides of the longitudinal center **18** successive pages of a book or the like, the printing of which being respectively inverted as illustrated in FIGURE 8. The web **16** is directed over a transverse transport roller **20** suitably supported on the side frame members **12**, **14** and is slit longitudinally at **22** by a cutter disc **24** supported on a transverse rod **26** mounted on the frame members **12**, **14**. The slit **22** forms adjacent webs **16'**, **16''** which are intermedially severed by a rotary blade of a transverse rotary cut-off device C which is supported between the frame members **12**, **14** below the slitter and cooperates with a transverse transport roller **30** also carried on frame members **12**, **14**. The blade **28** functions to form sheets **62**, **63** as is readily apparent, and although briefly described, it is the functional equivalent of that structure described in the above mentioned United States Letters Patent.

The sheets or pages 62, 63 are concurrently carried downwardly between a pair of spaced, driven feed rollers 32, 34 extending between the frame members 12, 14. The leading edge of the sheets is deflected horizontally by the angular side 36 of a frame-carried deflector bar 38. The leading edges of the sheets 62, 63 are picked up between a frame-supported, driven feed roll 40 and the rear end of an endless conveyor 42. The conveyor may comprise a belt 44 as shown, or separate conventional parallel tapes, if preferred, carried on horizontally spaced rollers 46, 48 of which one is power driven. The endless conveyor is relatively "fast moving" as compared with the subsequent sheet-conveyor structure to be described; this relative speed relationship facilitating collating of the sheets as will become apparent.

At the discharge end of the conveyor 42, vertically above the roller 48 is a collating assembly indicated generally at 80 and comprising guide means whereby the leading edge of sheets are "undertucked" or "overtucked" with respect to the trailing edge of a proceeding sheet. The collating assembly 80, see FIGURES 1–4, includes a a transverse support rod 82 fixedly secured on raised portions of the side frame members 12, 14. The support rod 82 has adjustably spaced guide fingers 84 which form groups G′ and G″, respectively orient sheets 62 and 63. The guide fingers of the two groups are identical. Each guide finger comprises a body 85 having a forward, angularly tapered and rounded nose portion 86 and a lower guide edge 88. The body 85 is essentially rectangular in cross section, and is transversely apertured at 90, see FIGURE 3, and receives the rod 82 therethrough. A longitudinally extending slot 92 communicates with said aperture 90 and opens into a rearwardly opening notch 94 including spaced abutment legs 96, 98. The shaft 82 includes circumferential grooves 100, one being located in the plane of each guide tooth 84 and a lock screw 102 is received in a threaded bore in the teeth which is normal to the aperture 90 and extends tangentially therethrough for tangential receipt in the groove 100 to prevent lateral displacement on the rod 82. Extending transversely between the side frame members 12, 14 is an abutment rod 104 which extends between the abutment legs 96, 98 of the guide fingers and as seen in FIGURE 2, the abutment legs 96 of the group G″ fingers engage the rod 104 to orient the guide edge 88″ thereof angularly below the guide edge 88′ of the group G′ fingers which have their abutment leg 98 in engagement with the rod 104. Thus the fingers have limited vertical angular pivotal adjustment on the rod 82 determined by the space between the legs 96, 98 and an adjusted position can be maintained by the lock screws 102. Interspersed between adjacent fingers 84 are anti-friction rollers 105 which overlie the roller 48, see FIGURE 2, and engage the upper surface of the sheets 62, 63 to insure movement by the endless belt 44.

The fingers 84 of group G′ will have their lower guide edges 88′ in coplanar relation to orient the leading edges of sheets or pages 62 to overlap trailing edges of a proceeding sheet 62′, and the fingers 84 of group G″ will have their guide edges 88″ in coplanar relation below the trailing edge of a proceeding sheet or page 63′; see FIGURES 6 and 7.

Horizontally spaced from and in substantial longitudinal alignment with the conveyor 42 is a delivery conveyor 108 which includes an endless belt 110 supported on horizontally spaced rollers 112, 114 suitably supported between the frame members 12, 14, one roller being power driven. The conveyor belt 110 is driven at a slower speed than the conveyor belt 44 resulting in an overlap between adjacent trailing and leading edges of successive sheets being collated. The upper run of the belt 110, it will be noted, is in a plane slightly below that of the upper run of the belt 44 and thus in the absence of guide edges 88″ of fingers G″ the sheets would tend to overlap at their adjacent edges due to the relative speeds of the conveyors.

Extending between the side frame members 12, 14 in overlying relation to the roller 112 and belt 110 thereon, are a plurality of spaced rollers 116 which are journaled on a support shaft 118 carried by the side frame members. As a printed sheet 62, 63 is moved from the belt 44 beneath the collating fingers it is nipped between the rollers 116 and slower moving belt 110 and overruns a proceeding sheet to provide a predetermined overlap in relation to the relative speeds of the belts.

In advance of the rollers 116 and forward of the guide finger groups G′, G″, see FIGURES 1 and 2, is a fixed guide assembly 120 comprising a pair of overlying bars 122, 124 secured by fastening elements 126, and extending between portions of the side frame members 12, 14. The bars 122, 124 have clamped therebetween depending, curved guide fingers 128 which act to prevent the leading edge of the "over-tucked" sheets 62 from curling upwardly before they are engaged between belt 110 and rollers 116, as well as preventing the "under-tucked" leading edge of sheets 63 from curling upwardly and from beneath the trailing edge of a proceeding sheet prior to engagement by the rollers 116 and belt 110.

The manner in which this embodiment of the collating apparatus functions is believed quite clear to those skilled in the art and thus further explanation appears to be unnecessary.

Referring to FIGURE 9, 10*a*–10*f*, as seen in FIGURE 9, the web has been slit and is fed downwardly to a rotary cut-off device C′ having a fixed blade 60 and a rotary blade 61, the latter being suitably driven for severing the longitudinally slit web into separate sheets of equal length, the sheets of one web strip being indicated at 62 and the others at 63 as in the previously described embodiment.

The sheets severed from the two web strips are delivered by pull-out wheels 64 to the collator generally indicated at 80′. The specific collating device 80′ is that disclosed and described in United States Letters Patent 2,930,318 where the printing machine is disclosed in detail, and is shown on an enlarged scale in FIGURE 9, and the collating steps carried out are diagrammatically shown in FIGURES 10*a*–10*f*. This collating device comprises the guide 65 and 67, and the rear roller 68 which cooperates with the pull-out wheels 64. Additionally, the collator includes an endless conveyor belt 69 operating over the rollers 70, and on top of the belt there are feed rollers 71, two in number, which cooperate with the guide 65, and feed rollers 72 which cooperate with the guide 67.

Disposed transversely beneath the guides 65, 67 in horizontal alignment with the nip of belt 69 and rollers 71, 72 is a horizontal plate 70′ which terminates adjacent the entrance or nip between rollers 71, 72 and belt 69.

The rollers 71, 72 are journaled on a support shaft 73 carried on arms 74, pivoted at 75 on arms 76 carrying the roller 70 at 77, see FIGURE 10, and tension springs 78 urge the rollers 71, 72 into engagement with the belt 69.

The conveyor belt 69 runs at a slower speed than the peripheral speed of the pull-out wheels 64 and the feed wheels 71 and 72 press the sheets against the belt to assure of the uniform feeding of the sheets onto the belt. The forward edge of the guide 65 is positioned in advance of the forward edge of the guide 67 and since belt 69 moves more slowly than the paper delivered to it by the pull-out wheels 64, an overlap of the sheets is brought about in which there is either head-over-tail or head-under-tail-lap dependent upon the position of the forward edges of the guides 65 and 67. The advance position of the forward edge of the guide 65 brings about a head-under-tail lap as diagrammatically illustrated in FIGURES 10*d*, 10*e* and 10*f*. The leading edge of a sheet 62 strikes the guide 65 and is guided towards the feed wheels 71

above horizontal plate **70'** as a sheet **62** is severed by the cut-off device. The succeeding sheet on striking the guide **65** is deflected under the immediately proceeding sheet because of the slower speed of belt **69**. Accordingly sheets **62** are properly collated as they are delivered. Now, referring to FIGURES 10*a*–10*c*, it will be seen that as a sheet **63** is cut from the web strip and fed downwardly by the pull-out wheels **64**, it will be deflected toward the feed wheels **72** by the guide **67** and plate **70'** and carried along by the belt and the trailing edge of the sheet will drop from the guide **67** before the leading edge of the next sheet reaches it, see FIGURE 10*b*. This will cause the leading edge of the next sheet to overlap the trailing edge of the preceeding sheet so that the work in this case is delivered head-over-tail, see FIGURE 10*c*. Thus the sheets **63** are properly collated according to delivery. The manner in which successive sheets are collated is substantially identical with that of the previously described embodiment.

Each of the disclosed and described embodiments **80** and **80'** of the collating apparatus may be used in conjunction with the novel collated-sheet hold down apparatus to be described in detail.

The delivery conveyor belts **110** or **69** are disposed between lateral retaining walls **124'**, **126'** supported on side frame members **12**, **14**, respectively, see FIGS. 1 and 5. Longitudinally spaced on the walls **124'**, **126'** are upwardly projecting plates **128** including notches **130** removably receiving transverse support rods **132**. The plates **128** include block portions **134** notched out at **136** to fit on the members **12**, **14**, and include vertically adjustable screws **138** therein, the lower ends thereof being engageable on the upper edges of the side frame members **12**, **14**.

The rods **132** extend transversely over the upper run of the belt **110** or **69**, and have depending centrally therefrom by means of bosses **140** and lock screws **141**, a longitudinally disposed separating plate **142**; see FIGURES 1 and 5 which separates the collated sheets **62**, **63** and maintains them in longitudinal alignment with walls **124'**, **126'**.

Supported by means of intermediate bosses **144** are longitudinally extending pressure bars **146** comprising juxtaposed elongated strips **148**, **150** retained together by suitable fasteners. The strips **148**, **150** include a plurality of longitudinally spaced, overlying apertures **152**, **154**, respectively, the aperture **154** of the lower strip **150** including an annular, inwardly directed collar **156** for retaining a ball bearing **158** therein which will engage the upper surfaces of the collated sheets **62**, **63** without causing frictional resistance to longitudinal movement thereof. The ball bearings **158** are essentially gravity responsive after the screws **138** have been adjusted.

The collating apparatus has been disclosed and described in detail for use with a printing machine providing respectively inverted copies of a work. The collator is intended to be claimed in its broadest aspect to include means whereby pages of a single work may be collated.

It will be obvious to those skilled in the art that various changes may be made without departing from the spirit of the invention and therefore the specification and drawings are referred to by way of explanation and not definition of restriction, the scope of the invention being set forth in the appended claims.

What is claimed as new is as follows:

1. Collating apparatus for use on printing machines successively and simultaneously producing pages of at least two identical works respectively numerically inverted, moving in parallel paths of travel and in which the adjacent leading and trailing edges of successive sheets of the respective works are to be overlapped and underlapped and collated, said apparatus comprising first transverse sheet feeding means for delivery of adjacent sheets of the two works at a predetermined linear rate of movement along parallel paths, transverse sheet deflecting means interposed in the path of travel of said first transverse sheet-feeding means and including separated portions for controlling the horizontal disposition of the leading edge of sheets in relation to the horizontal disposition of the trailing edge of a proceeding sheet, and second transverse sheet-feeding means spaced from and in alignment with said first sheet-feeding means and having a linear rate of speed less than that of said first sheet-feeding means, the relative speed differences of said sheet-feeding and said deflecting means affording overlapping, underlapping and collating of respective adjacent parallel pages of the two works.

2. The structure of claim 1; said sheet-deflecting means comprising a plurality of guide fingers angularly adjustable about a horizontal axis spaced above said first sheet-feeding means and including co-planar edge portions positionable angularly relative to the path of travel of sheets moving from said first sheet-feeding means.

3. The structure of claim 2; said first sheet-feeding means comprising a horizontally disposed outlet portion adjacent said co-planar edge portions, said second sheet-feeding means including a horizontally disposed inlet portion off-set vertically from said co-planar edge portions.

4. The structure of claim 3; said first sheet-feeding means comprising a horizontally disposed endless conveyor, said guide fingers including rollers disposed on opposite sides of said fingers and peripherally overlying the endless conveyor at the downstream end thereof, said second sheet-feeding means comprising a horizontally disposed endless conveyor having an upper run offset relative to the upper run of said first mentioned endless conveyor, and a roller extending transversely over the forward end of said second mentioned endless conveyor.

5. The structure of claim 2; and sheet edge orienting means comprising guide fingers interposed transversely between and curving downwardly from said first sheet-deflecting means toward said second sheet-feeding means.

References Cited in the file of this patent

UNITED STATES PATENTS

1,545,915	Maxson	July 14, 1925
1,632,433	Christman	June 14, 1927
2,261,971	Matthews	Nov. 11, 1941
2,563,492	Turrall et al.	Aug. 7, 1951
2,603,484	Gates	July 15, 1952
2,663,564	Meffert	Dec. 22, 1953