Office de la Propriété Intellectuelle du Canada
Un organisme d'Industrie Canada

Canadian Intellectual Property Office
An agency of Industry Canada

CA 2591982 C 2014/05/06

(11)(21) 2 591 982

(12) BREVET CANADIEN
CANADIAN PATENT

(13) C

(86) Date de dépôt PCT/PCT Filing Date: 2005/12/16
(87) Date publication PCT/PCT Publication Date: 2006/06/29
(45) Date de délivrance/Issue Date: 2014/05/06
(85) Entrée phase nationale/National Entry: 2007/06/21
(86) N° demande PCT/PCT Application No.: CH 2005/000754
(87) N° publication PCT/PCT Publication No.: 2006/066431
(30) Priorité/Priority: 2004/12/23 (CH2139/04)

(51) Cl.Int./Int.Cl. *B32B 27/10* (2006.01), *B32B 27/34* (2006.01), *B32B 29/00* (2006.01), *B32B 37/30* (2006.01), *B42D 15/00* (2006.01), *D21H 21/42* (2006.01)

(72) Inventeurs/Inventors:
GROB, JAKOB, CH;
KOCHER, CHRISTOPH, CH

(73) Propriétaire/Owner:
LANDQART, CH

(74) Agent: CASSAN MACLEAN

(54) Titre : STRUCTURE MULTICOUCHE SERVANT DE SUBSTRAT D'IMPRESSION ET PROCEDE DE FABRICATION
(54) Title: MULTILAYER STRUCTURE AS A PRINTING SUBSTRATE AND METHOD FOR THE PRODUCTION THEREOF

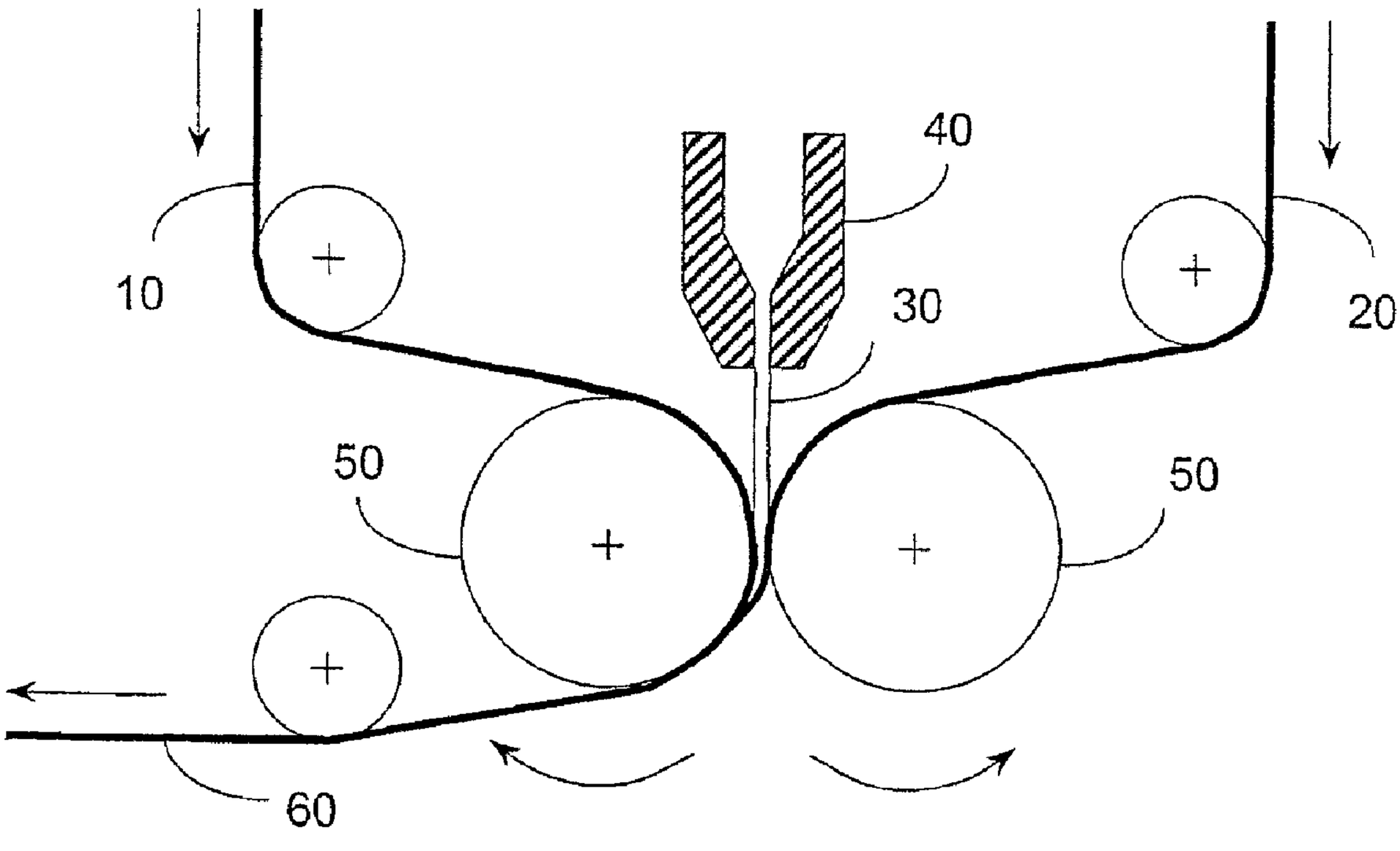

(57) Abrégé/Abstract:
Disclosed is a method for producing a multilayer substrate (60), e.g. as security paper, comprising at least one first paper layer (10), at least one second paper layer (20), and at least one plastic layer (80) that is located between the paper layers (10, 20, 202, 214), is connected to the paper layers (10, 20, 202, 214), and is made of a thermoplastic polymer material. In order to establish a connection between the different layers according to the inventive method, the plastic layer (80) is delivered between the paper layers (10, 20, 202, 214) in a fused state, and the paper layers (10, 20, 202, 214) are then pressed between a pair of rolls (50) in a continuous process such that a material bond is created between the paper layers (10, 20) and the plastic layer (80) while a penetration zone is embodied in which parts of the plastic layer (80) are connected to the mass of the fiber compound of the paper layers (10, 20, 202, 214). The plastic layer (80) is provided with a grammage of more than 20 g/m^2 and a maximum of 100 g/m^2.

(12) NACH DEM VERTRAG ÜBER DIE INTERNATIONALE ZUSAMMENARBEIT AUF DEM GEBIET DES PATENTWESENS (PCT) VERÖFFENTLICHTE INTERNATIONALE ANMELDUNG

GEÄNDERTE FASSUNG

(19) Weltorganisation für geistiges Eigentum
Internationales Büro

(43) Internationales Veröffentlichungsdatum
29. Juni 2006 (29.06.2006)

PCT

(10) Internationale Veröffentlichungsnummer
WO 2006/066431 A1

(51) Internationale Patentklassifikation:
B32B 27/10 (2006.01) *B32B 37/30* (2006.01)
B32B 27/34 (2006.01) *B42D 15/00* (2006.01)
B32B 29/00 (2006.01) *D21H 21/42* (2006.01)

(21) Internationales Aktenzeichen: PCT/CH2005/000754

(22) Internationales Anmeldedatum:
16. Dezember 2005 (16.12.2005)

(25) Einreichungssprache: Deutsch

(26) Veröffentlichungssprache: Deutsch

(30) Angaben zur Priorität:
2139/04 23. Dezember 2004 (23.12.2004) CH

(71) Anmelder *(für alle Bestimmungsstaaten mit Ausnahme von US)*: **LANDQART** [CH/CH]; Kantonsstrasse, CH-7302 Landquart (CH).

(72) Erfinder; und

(75) Erfinder/Anmelder *(nur für US)*: **GROB, Jakob** [CH/CH]; Islastrasse 11, CH-7303 Mastrils (CH). **KOCHER, Christopg** [CH/CH]; Dörflistrasse 10, CH-8057 Zürich (CH).

(74) Anwalt: **BREMI, Tobias**; Isler & Pedrazzini AG, Gotthardstrasse 53, Postfach 6940, CH-8023 Zürich (CH).

(81) Bestimmungsstaaten *(soweit nicht anders angegeben, für jede verfügbare nationale Schutzrechtsart)*: AE, AG, AL, AM, AT, AU, AZ, BA, BB, BG, BR, BW, BY, BZ, CA, CH, CN, CO, CR, CU, CZ, DE, DK, DM, DZ, EC, EE, EG, ES, FI, GB, GD, GE, GH, GM, HR, HU, ID, IL, IN, IS, JP, KE, KG, KM, KN, KP, KR, KZ, LC, LK, LR, LS, LT, LU, LV, LY, MA, MD, MG, MK, MN, MW, MX, MZ, NA, NG, NI, NO, NZ, OM, PG, PH, PL, PT, RO, RU, SC, SD, SE, SG, SK, SL, SM, SY, TJ, TM, TN, TR, TT, TZ, UA, UG, US, UZ, VC, VN, YU, ZA, ZM, ZW.

(84) Bestimmungsstaaten *(soweit nicht anders angegeben, für jede verfügbare regionale Schutzrechtsart)*: ARIPO (BW, GH, GM, KE, LS, MW, MZ, NA, SD, SL, SZ, TZ, UG,

[Fortsetzung auf der nächsten Seite]

(54) Title: MULTILAYER STRUCTURE AS A PRINTING SUBSTRATE, AND METHOD FOR THE PRODUCTION THEREOF

(54) Bezeichnung: MEHRSCHICHTAUFBAU ALS DRUCKSUBSTRAT SOWIE VERFAHREN ZU DESSEN HERSTELLUNG

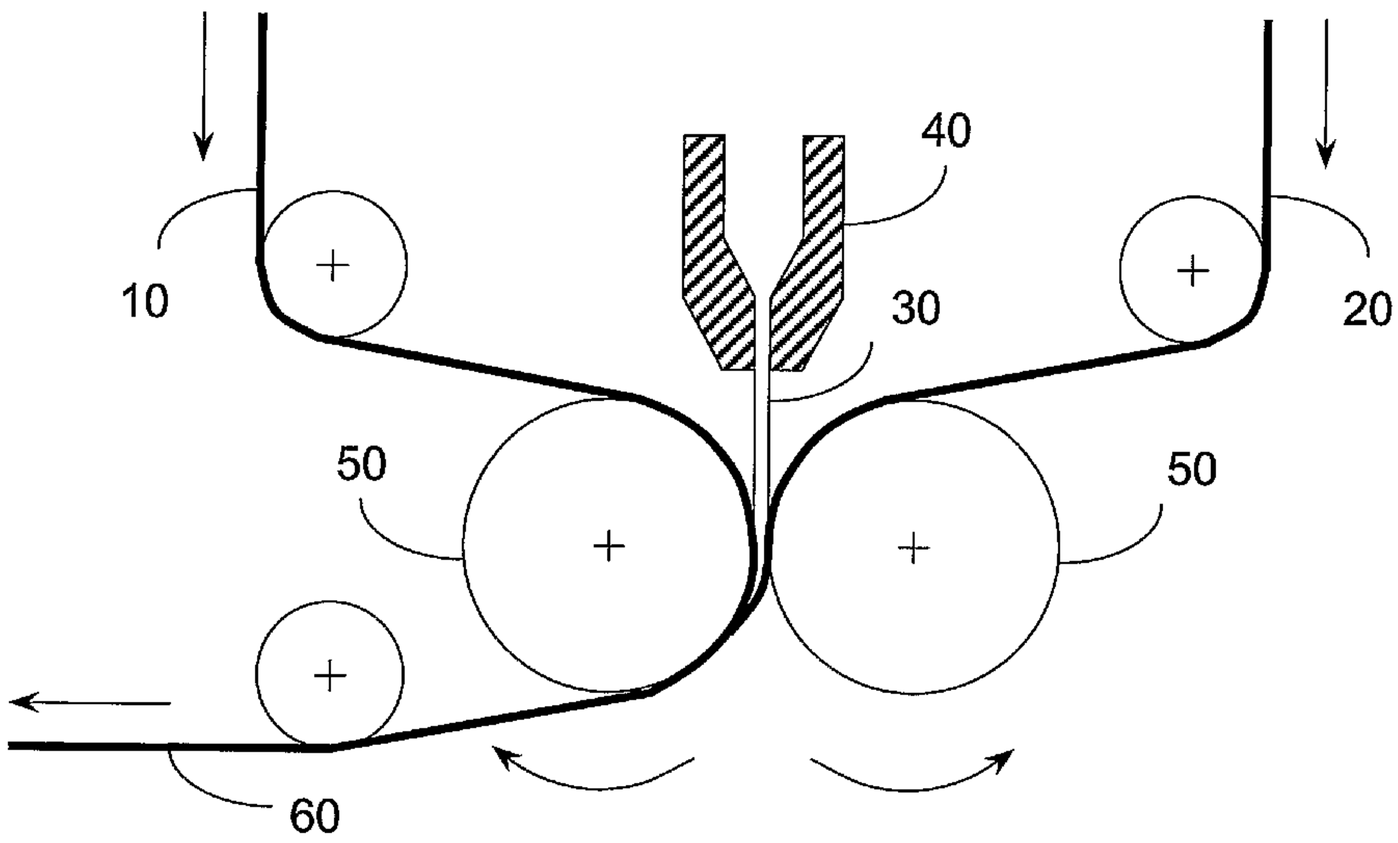

(57) Abstract: Disclosed is a method for producing a multilayer substrate (60), e.g. as security paper, comprising at least one first paper layer (10), at least one second paper layer (20), and at least one plastic layer (80) that is located between the paper layers (10, 20, 202, 214), is connected to the paper layers (10, 20, 202, 214), and is made of a thermoplastic polymer material. In order to establish a connection between the different layers according to the inventive method, the plastic layer (80) is delivered between the paper layers (10, 20, 202, 214) in a fused state, and the paper layers (10, 20, 202, 214) are then pressed between a pair of rolls (50) in a continuous process such that a material bond is created between the paper layers (10, 20) and the plastic layer (80) while a penetration zone is embodied in which parts of the plastic layer (80) are connected to the mass of the fiber compound of the paper layers (10, 20, 202, 214). The plastic layer (80) is provided with a grammage of more than 20 g/m^2 and a maximum of 100 g/m^2.

[Fortsetzung auf der nächsten Seite]

WO 2006/066431 A1

WO 2006/066431 A1

ZM, ZW), eurasisches (AM, AZ, BY, KG, KZ, MD, RU, TJ, TM), europäisches (AT, BE, BG, CH, CY, CZ, DE, DK, EE, ES, FI, FR, GB, GR, HU, IE, IS, IT, LT, LU, LV, MC, NL, PL, PT, RO, SE, SI, SK, TR), OAPI (BF, BJ, CF, CG, CI, CM, GA, GN, GQ, GW, ML, MR, NE, SN, TD, TG).

Veröffentlicht:

— *mit internationalem Recherchenbericht*

(88) Veröffentlichungsdatum des geänderten internationalen Recherchenberichts: 24. August 2006

(15) Informationen zur Berichtigung:
siehe PCT Gazette Nr. 34/2006 vom 24. August 2006

Zur Erklärung der Zweibuchstaben-Codes und der anderen Abkürzungen wird auf die Erklärungen ("Guidance Notes on Codes and Abbreviations") am Anfang jeder regulären Ausgabe der PCT-Gazette verwiesen.

(57) Zusammenfassung: Verfahren zur Herstellung eines Mehrschichtsubstrates (60), z.B. als Sicherheitspapier, umfassend wenigstens eine erste Papierlage (10), wenigstens eine zweite Papierlage (20), sowie wenigstens eine, zwischen den Papierlagen (10, 20, 202, 214) angeordnete und mit den Papierlagen (10, 20, 202, 214) verbundene Kunststoffschicht (80) aus wenigstens einem thermoplastischen polymeren Material.Verfahren, welches zu einer Verbindung zwischen den unterschiedlichen Schichten führt, dadurch, dass die Kunststoffschicht (80) in schmelzflüssigem Zustand zwischen die Papierlagen (10, 20, 202, 214) zugeführt wird, und die Papierlagen (10, 20, 202, 214) anschliessend zwischen einem Walzenpaar (50) in einem kontinuierlichen Prozess gepresst werden, wobei eine stoffschlüssige Verbindung zwischen den Papierlagen (10, 20) und der Kunststoffschicht (80) unter Ausbildung einer Penetrationszone, in welcher Teile der Kunststoffschicht (80) mit der Masse des Faserverbundes der Papierlagen (10, 20, 202, 214) verbunden sind, ergibt, und wobei die Kunststoffschicht (80) mehr als 20 g/m^2 und höchstens 100 g/m^2 Flächengewicht aufweist.

DESCRIPTION

TITLE

Multilayer structure as a printing substrate and method for the production thereof

TECHNICAL FIELD

A description is given of a multilayer substrate and a method for the production of such a multilayer substrate, which in particular can be used as a print carrier, e.g. as a security document. The multilayer substrate comprises at least one first paper layer, at least one second paper layer and at least one plastics layer of at least one thermoplastic polymer material arranged between the paper layers and joined to the paper layers. The flat substrate proposed can be used for example as a print carrier, in particular as a security paper, but also as a packaging material, covering material, card substrate, etc.

PRIOR ART

Printing substrates for documents of value, such as banknotes, are subjected to continuous further development, in order to be able to meet the likewise continuously growing requirements for security against forgery. It is of particular interest to create safeguards which, in daily use, can be detected by the user without further technical aids but cannot readily be imitated in terms of their nature. Such a feature is, for example, the multitone watermark, such as is traditionally used in security papers and is established as a standard.

In the continuous striving for further-developed substrates for banknotes, in addition to the known

security papers, alternative materials have also come into use as a carrier material. For example, in Australia since 1988, banknotes have been introduced in which a polymer film is used as the printing substrate. As compared with classic paper-based banknotes, such polymer banknotes have diverse advantages, such as a higher resistance to tearing or a higher resistance to soiling. However, polymer banknotes have certain important disadvantages in relation to security against forgery as compared with banknotes made of security papers. In particular, it is not possible to introduce true watermarks in these substrates. In addition, other established features used in paper substrates and recognized by the consumer, such as mottled fibers, planchettes or security threads, cannot be implemented in polymer banknotes. Likewise, the characteristic handle and sound typical of paper banknotes is missing, which are often used as a clear recognition criterion for authentic banknotes. The importance of the tactile nature in distinguishing authentic and counterfeit banknotes has been investigated, for example by the Bank of Canada, and explained in SPIE Vol. 5310, Optical Security and Counterfeit Deterrence Techniques V, Analysis of Counterfeits and Public Survey Results as Design Input, p. 63 ff.

In order to combine the advantages of the two banknote substrates, combinations of the two materials have already been proposed. For instance, EP 0 628 408 describes a substrate which consists of a printed film, onto which a security paper is laminated on both sides with the aid of an adhesive. The purpose of such inventions is in each case, inter alia, to be able to integrate additional security features, in particular as print, between the two layers and to join two paper layers.

In WO 2004/028825, a structure is proposed in which a security paper is provided with a film on the surface. In one possible embodiment, a paper web pierced in the manner of a window is provided between two films. The purpose of this invention is to protect the paper surface on both sides in this way against soiling.

In addition to the improved durability mentioned, as compared with conventional paper banknotes, polymer banknotes have the possibility of additional safeguarding against imitations which cannot be implemented with classic paper substrates. If the originally transparent polymer substrate is not printed or printed only partially deliberately in certain regions, the result is transparent regions, what are known as windows, which are viewed as a valuable safeguard against relatively simple and widespread reproduction methods. These viewing windows are classified as first-stage features, as they are known, which, by definition, can be verified by the user without the aid of additional apparatus. Since the checking of the viewing window can be performed in a particularly discreet way and, consequently, even unconsciously, this feature is estimated by many central banks to be extremely effective in principle. In addition, with transparent regions, the possibility is opened up of applying novel types of security features which, in terms of their function, rely on a transparent carrier material.

However, the substrate with which banknotes having such viewing windows are implemented in the known cases has important disadvantages in relation to security. The characteristic handle and sound of a paper-based banknote, often the most important characteristic when detecting counterfeit notes, are entirely missing and cannot be put back.

The treasured watermark, also known by the user and still extremely secure, likewise cannot be implemented in polymer substrates and can be put back only unsatisfactorily by printing methods, a controversial procedure since watermarks imitated by printing usually expose a banknote as a forgery. Further security features, likewise known in the public domain, such as security threads and mottled fibers, likewise cannot be implemented in polymer substrates or in any case put back by printing methods in a manner which is unsatisfactory and, as mentioned above, dubious.

It is to be viewed as a further disadvantage of the polymer banknotes that these cannot be folded in the usual way, since they spring back spontaneously. In the event of a more insistent attempt to fold a polymer banknote, a fold is achieved which no longer re-forms. In the region of the folded edge, the printing is typically lost; likewise the printing ink is worn away quickly by use in a manner which is unusual for banknotes. It is to be viewed as a further disadvantage that, in the known cases, the polymer substrate is an axially oriented polypropylene, a material which is used in a similar quality in innumerable products in everyday use, such as packaging films, transparent films, sealing films, etc. and, as a result, is available to a potential forger in a simple way for imitations. The fact that the substrate used is an axially oriented film proves to be disadvantageous in particular when the substrate is subjected to elevated temperatures, as can entirely possibly occur in daily use, however. In the vicinity of a hot hotplate or else under a halogen lamp, it is entirely possible for such a polymer banknote to shrivel up.

For all these reasons, banknotes on polymer substrate have previously not gained any great significance and,

to some extent, after introduction has been carried out, have even been replaced again by classic banknotes based on paper substrate.

In the attempt, without the disadvantages mentioned, nevertheless to implement the viewing window which is treasured and classified highly as a security feature, diverse attempts have been made to obtain such a viewing window in a paper substrate as well.

For instance, DE 43 34 848 describes a paper carrier having a window-like aperture which is closed with a transparent covering film.

Another approach is described in WO 03/085193. There, a security strip is incorporated into a security paper in the paper forming process in such a way that viewing sections are formed in the document of value. What is common to both approaches is that the viewing window can be implemented only in a defined strip region, which results from the process from the supply of covering film or security strip in the running direction. In these regions, the substrate differs in thickness and mechanical properties from the remaining regions, which can have a disruptive effect both during processing and in use.

Accordingly, WO 2004/076198 follows another approach again, describing a multilayer laminate comprising paper layers and film layers, in which the paper layers in one preferred embodiment have fully penetrating cutouts, which result in the desired viewing windows in the laminate. The advantage of such a layer structure lies in the fact that the viewing windows can be implemented at any desired locations and in any desired number in the document. The paper layers and film are joined in a lamination process, in which any type of adhesive is explicitly omitted. This proposal is a

technologically elegant approach but which, under certain circumstances, involves certain economic and process engineering difficulties. In particular, the heating of the paper layers above the softening temperature of the polymer film, which is inevitable because of the process, is under certain circumstances disadvantageous for the properties of the product. In this process, the paper layers are highly dehumidified, tend to yellowing or even to parchmentizing, which can have detrimental effects on the optical properties (shade, opacity) and the mechanical properties (embrittlement, double fold number). It is to be viewed as a further disadvantage of the process that, in the case of apertures in the two paper layers, in which the polymer film is freely accessible from one or both sides, and thus a viewing window is formed which is either covered on one side or else is fully transparent, the polymer film is heated to the same temperature as the remaining composite. At this temperature, as a rule an increased ability of the polymer to flow is provided, so that adequate penetration into the paper layers occurs, forming a penetration zone. Under these conditions, the polymer, by its nature, likewise has an increased affinity with the parts of the apparatus (rolls, carrier tapes) of the laminator, which are at the same or even at a higher temperature than that of the polymer, which can lead to the polymer film sticking to the parts of the apparatus and to the formation of some surface structures.

SUMMARY OF THE INVENTION

Accordingly, the invention is based on the object of providing a print carrier that is improved in comparison with the prior art, in particular for use as a security paper, and also a process for the production thereof. In concrete terms, it concerns the provision

of a multilayer substrate and a method for the production thereof, the multilayer substrate comprising at least one first paper layer, at least one second paper layer and at least one plastics layer of at least one thermoplastic polymer material arranged between the paper layers and joined to the paper layers. It preferably concerns the provision of a multilayer substrate and a method for the production thereof, the multilayer substrate comprising at least one first paper layer, at least one second paper layer and at least one plastics layer of at least one thermoplastic polymer material arranged between the paper layers and joined to the paper layers, at least one of the paper layers having fully penetrating apertures, which are covered to their full extent by the plastics layer.

This object is achieved in that the plastics layer is fed in between the paper layers in the molten state, and the paper layers are then pressed between a pair of rolls in a continuous process, the result being a cohesive connection between the paper layers and the plastics layer, forming a penetration zone in which parts of the plastics layer are joined to the mass of the fiber composite of the paper layers, and the plastics layer having a weight per unit area of more than 20 g/m^2 and at most 100 g/m^2.

The nub of the invention is thus to introduce a plastics layer between two paper layers in such a way that an intimate connection can be produced between the paper layers without using adhesives in the process, since the latter are frequently disadvantageous in relation to security (adhesively bonded laminates can be separated at the adhesive layers). Furthermore, at the same time the plastics layer is to perform a stabilizing and supporting function, which means that the plastics layer not only serves as an adhesion promoter between the two paper layers but reinforces

the multilayer substrate as a whole. This means that, for example, the double fold numbers are increased to an extreme extent as compared with pure paper substrates, and thus a multilayer substrate is provided which is substantially more durable, even with intensive use. This is made possible by a thickness of the plastics layer of more than 20 g/m^2. In order nevertheless to have paper-like tactile characteristics, the plastics layer should be no thicker than 100 g/m^2.

From a completely different field, it is known that multilayer laminates of paper with inner polymer layer can also be obtained by the polymer being put in between two paper layers in molten form in an extrusion coating method. Such a solution is described, for example, in US 2002/0176973 A1. In this text from another technical field, a laminate having improved dimensional stability under fluctuating atmospheric humidity is described which comprises two layers of paper with an inner layer of polymer, but the polymer layer in each case is thicker than each of the two paper layers.

Since this example originates from another technical field, the product characteristics are also substantially different from the characteristics which are sought in the subject of the invention. For example, no security papers, in particular no watermarked papers, are used, which differ quite substantially in terms of their strength and in their optical and tactile characteristics from the kraft papers and tissue papers used in US 2002/0176973 A1. Furthermore, the preferred polymers of US 2002/0176973 A1 are polyolefins which, on account of their hydrophobic character, have a low affinity with paper. Accordingly, the polymer does not penetrate into the paper layers either (cf. US 2002/0176973 A1 section

0040 and fig. 1/fig. 2), that is to say penetration zones in the sense of the present invention are without doubt not formed in US 2002/0176973 A1. The formation of a penetration zone in which the polymer penetrates at least partly into the fiber composite of the paper layers is, however, an essential feature of the present invention and of importance precisely for security applications. This is achieved, inter alia, by controlling the temperature of the laminator rolls which, in contrast, in the case of the document from the prior art US 2002/0176973 A1, are cooled to temperatures of 15-30°C (cf. US 2002/0176973 A1, section 0046).

As opposed to the present invention, which seeks a multilayer substrate which differs little from conventional security paper in its tactile characteristics, in US 2002/01796973 A1, according to the invention, a composite is achieved which, on account of the relatively thick interlayer of polymer, is stiffer and stronger than a conventional paper of the same thickness.

According to a first preferred embodiment, the plastics layer has a weight per unit area of 25-80 g/m^2. A weight per unit area of 25-40 g/m^2 is quite particularly preferred. In particular, the latter range proves to be extremely advantageous since, firstly, a sufficient supporting and stabilizing function of the plastics layer is ensured and, at the same time, for example when two identical paper layers with a thickness of 20-50 g/m^2 are used, a tactile behavior is achieved which barely differs from a normal paper having a corresponding total weight per unit area in the range from 70-120 g/m^2.

According to a further preferred embodiment, at least one paper layer, preferably both paper layers, can on

average become as thick as or preferably thicker than the plastics layer. In this way, inter alia, tactile characteristics can be ensured which are similar to a paper substrate, for example a security paper.

A further preferred embodiment is characterized in that what are known as windows or at least regions in which the plastics layer is exposed are provided. To this end, at least one of the paper layers has at least one cutout that is fully penetrating in some regions. Correct windows can be formed by both paper layers each having fully penetrating cutouts, and these cutouts being supplied in a registered manner such that, at least in some regions, viewing windows are formed, the viewing windows preferably being at least translucent or in particular preferably completely transparent. It is also additionally or simultaneously possible for both paper layers each to have fully penetrating cutouts, and for these cutouts to be supplied in a registered manner such that, at least in some regions, regions are formed in which the plastics layer is exposed only on one side. Here, too, at least in the visible regions, the plastics layer is preferably translucent or transparent.

The use of the weights per unit area specified above of the paper layers and plastics layer thus permit, for example, the production of stable and transparent windows. However, it is also possible to provide security features or the like in such windows, and it is not necessarily the case that the windows have to be completely transparent. For instance, it is possible to provide (fluorescent) dyes or the like in the plastics layer. However, it is preferred for the thermoplastic polymer material of the plastics layer to be a transparent material.

In relation to the material of the plastics layer, for example the following materials have proven to be suitable: polyethylene (PE), polypropylene (PP), polyvinyl chloride (PVC), soft PVC (PVC-P), polystyrene (PS), polyester, co-polyester, polycarbonate (PC), polymethyl methacrylate (PMMA), polyoxymethylene (POM), polyethylene terephthalate (PET), polyether ether ketone (PEEK), polyamide (PA).

In the case of the preferred polyamide, in particular polyamide 6 (PA6) or polyamide 12 (PA12) are suitable, amongst others amorphous forms being preferred. Furthermore, mixtures (blends) of the aforementioned polymers or co-polymers are possible. For instance, amorphous co-polyamide, preferably based on PA12, is preferred.

According to a further preferred embodiment, the thermoplastic polymer material of the plastics layer has a glass transition point T_g and/or melting point T_m above 0°C, preferably above 40°C. With such materials, it is possible, for example for the extrusion, to work at a melt temperature in the range from 250-350°, this temperature preferably being set at the outlet from the die. It transpires that an extrusion at a viscosity in the range from 50-1200 Pa s, in particular in a range from 500-1000 Pa s, is advantageous.

The method can preferably be carried out at a process speed of more than 70 m/min, in particular preferably more than 100 m/min. In other words, substantially higher production speeds are possible than can be achieved in laminating methods.

In order to be able to set the penetration zones optimally without any damage to the paper layers, it proves to be advantageous to heat at least one paper layer, preferably both paper layers, substantially

immediately before the supply of the plastics layer. This is preferably done exclusively on the side of the paper web facing the plastics layer. In this case, the heating can be effected by means of hot air blowers and/or infrared radiators and/or in a heating duct and/or over a heating table and/or over one or more heated (calender) rolls.

According to another preferred embodiment, a line pressure of 0-500 N/cm, ideally of 250-450 N/cm, is applied between the pair of rolls immediately after the introduction of the plastic layer by the extrusion. In this case, the pair of rolls is preferably kept at a temperature above room temperature. However, the roll temperature should also ideally not lie above the melt temperature or, respectively, above the glass transition point of the materials used for the plastics layer. Accordingly, it proves to be advantageous to control the temperature of the pair of rolls to a temperature in the range from 50-100°C, preferably in the range from 60-80°C. A temperature just below the glass transition point T_g and/or the melting point T_m of the materials used for the plastics layer is preferably chosen. Under certain circumstances, it can prove to be advantageous to choose a roll temperature above the glass transition point of the materials used for the plastics layer. In particular, amorphous materials normally have a course of the melt viscosity which drops steeply as the temperature falls, so that roll temperatures above T_g may be necessary for adequate penetration. For instance, for a fully amorphous co-polyamide 12 with T_g of 155°C, a roll temperature of T_g-45 to T_g-25 (about 110-130°C) has proven to be optimal, for a partially crystalline co-polyamide 12 with T_m of 178°C, a roll temperature of T_m-105 to T_m-90 (about 75-90°C). Depending on the material used, the ideal roll temperatures may also be different, which, if necessary, requires roll temperature control by

means of oil temperature control, by which means roll temperatures up to 180°C can be achieved.

The method is preferably set in such a way that the penetration zones have an average thickness in the range from 5-30 µm, in particular preferably in the range from 10-20 µm.

A surface which is particularly smooth and therefore optimal in relation to transparency, in particular in the windows, can be achieved by high-gloss polished steel rolls being used as rolls. The rolls can optionally be anti-adhesion finished, which promotes the separation of the windows from the roll. For instance, surfaces of PTFE, Teflon surfaces, surfaces made of chromium or chromium steel with implanted Teflon particles (also known under the trade name TeFlok), silicone surfaces, surfaces of poly(imide), etc., are suitable. Furthermore, it can prove to be expedient if one or both rolls have a ductile surface. As a result, a more homogeneous pressure distribution can be achieved over the total width of the web. This can be advantageous in particular if one or both paper webs have fully penetrating cutouts, in the region of which, because of the lack of material, less pressure can be applied via the rolls. Ductile rolls are able to compensate for this pressure difference, which results in improved adhesion in these regions as well. Such rolls are, for example, rubber rolls coated with PTFE or rubber rolls encased in PTFE or silicone-coated rolls.

As already mentioned further above, security features or combinations of security features can be incorporated in the plastics layer. In this case, for example the following are possible: mottled fibers, planchettes, metal fibers, marking materials, IR or UV dyes, security pigments, fluorescent dyes, effect

pigments or security threads, these security features being added to the polymer mixture or the melt as additives or scattered in the vicinity of the roll nip or blown onto the web of melt or, in the case of the security thread, led into the roll nip.

Likewise, it is preferably possible to provide security features in the paper layers. In this case, such security features can be arranged only in one paper layer or, for example, different security features can be used in the two paper layers. Thus, the security features already known from the region of papers as substrate for banknotes can be used without further modification. As security features of the paper layers, for example the following can be used: watermarks, in particular gray-stage watermarks, security threads, OVD, mottled fibers, security pigments, iridescent ink applications, chips, in particular RFID chips, magnetic strips.

In particular when windows are to be produced and these are to have as homogeneous a surface as possible, according to a further embodiment, the molten polymer layer can be put in via a die which is in immediate contact with the paper layers. Alternatively or additionally, it is possible to ensure that the molten polymer layer is put in via an engraved roll, a screen printing roll or an applicator roll, in particular by using a three-roll unit.

It is preferred to form the plastics layer over substantially the entire area of the two paper layers. However, it is also possible to arrange a plastics layer only in some regions or in stripes and/or to configure the plastics layer to have a different thickness in some regions or in stripes.

The extrusion can be carried out on the basis of a simple melt but, alternatively, it is also possible to use for the material of the plastics layer a pre-polymer, a polymer dispersion or a polymer solution which, during or following the connection to the paper layers, cures chemically or physically and/or reacts and/or dries and/or gels.

Furthermore, the present invention relates to a multilayer substrate as can be produced in a method described above or, respectively, as is actually produced by a method as described above.

Such a multilayer substrate is preferably characterized in that at least one of the paper layers has at least one fully penetrating cutout in some regions, these preferably two paper layers each having fully penetrating cutouts and these cutouts being supplied in a registered manner in such a way that viewing windows are formed, at least in some regions, and that in the edge region of the cutouts there are flattened portions, which means that transitions from paper to polymer have a lower edge height than the paper thickness (cf. also fig. 3).

In a preferred variant of this embodiment, the combined cutouts of the two paper layers differ from one another in shape and/or size, so that the result is a viewing window which is characterized by an edge region which is covered by a paper layer only on one side. Such an embodiment is preferred for reasons of security against forgery, since it makes the multilayer structure visible, which cannot be put back by using a single paper layer.

A particularly preferred embodiment is characterized in that both paper layers in each case have fully penetrating cutouts, and these cutouts are supplied in

a registered manner in such a way that, at least in some regions, viewing windows and/or regions are formed in which the plastics layer is exposed only on one side, the plastics layer having at least one security feature in the form of a security thread, the security thread being led into the roll nip, and the security threads being visible in top view in the viewing windows and/or regions in the final multilayer substrate. The regions in which the plastics layer is exposed only on one side are in particular preferably arranged in a registered manner alternately on the top side and underside of the multilayer substrate preferably in the direction in which the security thread runs, in such a way that the security thread is visible from both sides in top view as a window thread. Such a multilayer substrate exhibits substantially increased security against forgery, in particular in combination with specific security threads which, for example, have fluorescent and/or polarizing and/or conductive features.

As already mentioned further above, the thermoplastic polymer material of the plastics layer is in particular a transparent material and, in regions of viewing windows, these are highly transparent and have a smooth surface. The material of the plastics layer is a polyamide, preferably an amorphous polyamide, preferably having a glass transition point above 20°C; preferred in particular is a polyamide 12 and/or an amorphous co-polyamide 12. The paper layers have a weight per unit area in the range from 5-500 g/m^2, preferably in the range from 10-80 g/m^2, in particular preferably in the range from 20-40 g/m^2. According to a preferred embodiment, at least one paper layer is a security paper. According to a further preferred embodiment, at least one paper layer has a watermark. The papers can have been made, for example, on a

cylinder paper machine or on a fourdrinier paper machine.

According to a preferred embodiment, the multilayer substrate has a double fold number which is substantially higher than that of normal paper carriers, which means that it has a double fold number of more than 1800, in particular of more than 5000.

Furthermore, the present invention relates to the use of such a multilayer substrate as a covering material, packaging material, card material, security paper, in particular as a banknote, check, ticket, certificate, share document, bond document, deed, identity document, access document.

Further preferred embodiments of the method, of the multilayer substrate and of its use are described in the dependent claims.

BRIEF DESCRIPTION OF THE FIGURES

The invention is to be explained in more detail below by using exemplary embodiments in conjunction with the drawings, in which:

fig. 1 shows the schematic process for the production of a multilayer composite according to the invention by putting in a melt by means of extrusion; and

fig. 2 shows a cross section through a multilayer substrate produced in this way.

Fig. 3 shows a micrograph of a cross section through a multilayer composite according to the invention with a semitransparent window (covered by paper on one side).

Fig. 4 shows a schematic drawing of a complete system for the production of a multilayer composite according to the invention.

WAYS OF IMPLEMENTING THE INVENTION

The subject of the present invention is to solve the aforementioned disadvantages in the production of a multilayer laminate and the aforementioned disadvantages of the product characteristics resulting therefrom by using plastic films, in that a laminating process, as proposed in WO 2004/076198, for example, is omitted and, instead, a multilayer substrate 60 based on a first paper layer 10 and a second paper layer 20 and polymer 80 is produced in such a way that the polymer is put in as a polymer melt 30 already in molten form.

Accordingly, the present invention relates to a process in which technologies from flat film extrusion are transferred to a coating application, which means that for the first time a multilayer composite can be produced which consists of paper layers (at least one thereof made of security paper) which, for example, have fully penetrating apertures, which are covered over completely with a film-like polymer layer without the use of a prefabricated film.

In this way, as compared with the laminating variants known in the prior art, the costly preforming of a flat film is dispensed with, just like the melting of the film in direct contact with the paper webs, which is cumbersome, time-consuming and damaging to the paper. Instead, as illustrated in figure 1, polymer granules are melted and conveyed in an extruder and, through a fishtail die 40, are extruded directly in the molten phase as a polymer melt 30 onto or between the paper layers, for example supplied from a roll. The term the

molten phase in this connection means a state of the polymers which is characterized by an increased deformability and a reduced viscosity. In this case, the viscosity lies in a range between 20 and 2000 Pa s which is suitable for polymer processing, in particular the production of flat films, preferably in the range from 50 to 1000 Pa s, in particular between 75 and 500 Pa s. In this case, it is unimportant whether the polymer melt is a polymer with a defined melting point T_m or defined melting interval $T_m \pm \Delta T$ at a temperature above the melting temperature T_m or whether this is a polymer without a defined melting point, which is present in a form heated so far above the glass transition point T_g that the viscosity of the material is reduced to such an extent that processing in the manner proposed is possible. Polymers which fall into the first class are, for example, partially crystalline polymers such as polyethylene (PE), polypropylene (PP), polyethylene terephthalate (PET), polyamide 6 (PA6), polyamide 12 (PA12), partially crystalline co-polyamides and partially crystalline co-polyesters. Polymers which fall into the second class are, for example, amorphous polymers such as polyvinyl chloride (PVC), polystyrene (PS), polycarbonate (PC), polymethyl methacrylate (PMMA) or else amorphous co-polyamides (e.g. based on PA12) and amorphous co-polyesters, such as are produced by Ems (EMS Chemie, Domat-Ems, Switzerland), for example.

Some examples of polymers with and without defined melting points which are particularly suitable for the application are given in the following table 1.

Table 1

Polymer	**T_g**	**T_m**
Polyethylene (PE)	-110 to -90°C	135°C
Polypropylene (PP)	-10°C	175°C

Polyvinyl chloride (PVC)	50 to 90°C	-
Polystyrene (PS)	100°C	-
Polycarbonate (PC)	150°C	-
Polymethylmethacrylate (PMMA)	105°C	-
Polyoxymethylene (POM)	125°C	175°C
Polyethylene terephthalate (PET)	70°C	265°C
Polyether ether ketone (PEEK)	145°C	335°C
Polyamide 6 (PA6)	50°C	215°C
Polyamide 12 (PA12)	45°C	178°C
Partially crystalline co-polyamide L25, Ems	45°C	178°C
Partially crystalline co-polyamide L16, Ems	50°C	178°C
Amorphous co-polyamide G21, Ems	125°C	-
Amorphous co-polyamide TR90, Ems	155°C	-

Preferred materials for carrying out the aforementioned application are, in particular, polymers from the class of polyamides. On account of their chemical structure, these have a particularly high affinity with paper. The reason for this fact is the formation of hydrogen bridges between the amide groups of the polyamide and the polar groups of the cellulose fibers of the paper. A multilayer substrate made of these preferred materials with paper is therefore distinguished by a particularly intimate bond, which is based firstly on good cohesion and secondly on good compatibility of the individual components. The intimate cohesion may possibly be a consequence of good wettability of the paper fibers with the polymer melt used. A further polymer class which is distinguished by good wettability and likewise results in composites with intimate cohesion is the polyesters. If appropriate, adequate cohesion can also be achieved with polymers which do not have the aforementioned possibility of forming hydrogen bridges, for example with polyolefins such as polyethylene or polypropylene.

Further advantageous properties of a polymer material for a substrate according to the invention are high chemical resistance to acids, bases, solvents, bleaching agents etc, high thermal resistance, high UV resistance, high transparency, high cyclic bending strength, high softening temperature. From this point of view, polyamides are particularly well suited, for example polyamide PA12 or co-polyamides based thereon.

Since the polymer in the sense of the invention strikes the paper directly in molten form, the influence of heat on the paper occurs briefly and therefore in a barely damaging manner. It is possible to operate with comparatively high melting temperatures in the range from 300-350°C which, in the case of a laminating process, could not be applied or could be applied only with generally irreversible damage to the paper. This has the advantage that, as a result of the high temperature of the melt, a lower melt viscosity can be achieved, which permits easier and faster penetration into the paper and an intimate bond required for a security substrate. At the same time, higher process speeds are permitted. Extrusion coating systems can accordingly also be operated without problems at process speeds of up to 500 m/min, while belt presses for the lamination when using plastic films are normally not operated at more than about 50 m/min. In the case in which a belt press or a roll laminator is used for the production of a multilayer substrate with a polymer film, the working temperature is restricted to about 200°C, since otherwise the paper is irreversibly damaged. At these temperatures, no adequate connection to the preferred materials, as is required for such a product, can be achieved. When an extrusion coating system is used, the required connection of the same materials is made possible, however, since the hot, free-flowing melt is able to penetrate sufficiently deeply into the paper surface

without the latter having to be brought to a temperature damaging to the paper.

The melt viscosity at a given temperature also depends in an indirect way on the shear rate, which offers a further possibility for setting the processing parameters and which makes the process management easier, in particular at elevated production speeds.

A further advantage of the method proposed is that, in a composite produced in this way, substantially lower layer thicknesses of polymer can be achieved than would be possible by means of lamination with a polymer film. The fact that, in the method according to the invention, the polymer in molten form is picked up directly by at least one supporting paper means that substantially thinner but still loadbearing and supporting layers can be achieved. This applies in particular to a multilayer input of polymer, which can be applied from one and the same fishtail die by using a plurality of extruders and an appropriate multilayer tool. Appropriate apparatus from extrusion technology can be adopted, in particular from the flat film extrusion sector.

A further advantage of the extrusion process according to the invention resides in the flexibility in relation to the variation of the polymer to be processed. Material changes are possible within an extremely short time, which also makes the production of smaller batch sizes attractive. In addition, marking substances, dyes, security pigments, fluorescent dyes, effect pigments, interference pigments, metal pigments, reactive dyes, UV absorbers, stabilizers and further additives, preferably in the form of a master batch, can be metered into the polymer granules in a simple way before extrusion, which permits simple

individualization and further safeguarding of the product.

A central difficulty in the production of the desired product resides in the formation of transparent, even windows. Substrates which are laminated with polymer on extrusion coating systems normally have no fully penetrating apertures. Accordingly, the documents known from the prior art also do not have any paper webs which have apertures in which viewing windows covered with polymer would be formed in the extrusion coating process. Extrusion coating systems for the production of paper composites are normally constructed in such a way that the paper is laid on a roughened, temperature-controlled or cooled steel roll, a second paper web led over a press roll covered with rubber is pressed against the first steel roll, and the polymer melt is extruded into the roll nip produced. This is in particular also the case in the document US 20020176973 A1 mentioned further above, where roll materials made of rubber or other materials with a ductility of rubber are explicitly used. Experience shows that such a configuration does not permit the formation of transparent, even windows in the region of cutouts in the paper webs. The roughened surface of the temperature-controlled steel roll is transferred into the molten polymer which, on the opposite side, adheres strongly to the rubber press roll. Cooling of the temperature-controlled pair of rolls far below the solidification temperature of the polymer may reduce the adhesion to the rubber roll somewhat but, nevertheless, a certain amount of bulging of the windows cannot be avoided; it is equally barely possible to achieve a smooth surface needed for adequate transparency.

The subject of the invention is then, inter alia, to choose a structure in which two high-gloss polished

steel rolls whose temperature can be controlled are chosen as the pair of rolls 50. Such a configuration is unknown for a thin, less voluminous composite as in the present case. Extrusion coating systems which operate with two steel rolls (instead of one steel roll and one rubber roll) are, however, used for processing voluminous, thick materials such as spun bonded nonwovens. The choice of two high-gloss polished steel rolls, which is unusual for the production of a thin, paper-based composite, now permits the formation of mirror-smooth, even, highly transparent viewing windows with the quality of an extruded flat film.

The cooling of the melt in contact with the rolls is largely carried out sufficiently quickly to prevent possible crystallization of the polymer. The roll temperature, as opposed to the roll temperature in a laminator, is chosen to be lower than the softening temperature of the polymer, which largely prevents the polymer adhering to the roll. Nevertheless, at the interface between polymer and paper, an adequately intimate bond is brought about by the formation of a penetration zone, in which the polymer at least partly encloses the fiber composite of the paper. One supposed reason for this is a certain insulating action of the paper, which has a low thermal conductivity. In contact with the paper web, the polymer melt therefore cools slowly, so that it is able to penetrate sufficiently deeply into the paper surface until it solidifies. Here, it proves to be advantageous that the penetrating melt comes closer to the cooler roll surface as the penetration depth increases, and thus the dissipation of heat takes place more quickly and the melt consequently solidifies more quickly the more deeply it penetrates into the paper. This self-regulating mechanism can be used to set the penetration depth of the polymer exactly and to prevent complete penetration of the polymer as far as the paper surface.

As opposed to this, in the laminating process in a hot-press or a roll laminator, the highest temperatures are to be met on the laminate outer side, so that the polymer film becomes more free-flowing the more deeply it penetrates into the paper layer. On the other hand, the lowest temperatures are to be met in the core of the laminate, where the joining of polymer and paper is intended to occur. A product produced in this way firstly tends to exhibit points on the surface through which polymer has penetrated completely and secondly to exhibit poorer composite adhesion. These disadvantages of the laminating variant described in the prior art have a detrimental effect on a product which has viewing windows. The polymer film in the exposed zones experiences the highest temperatures in the laminating process, since it comes to lie directly on the heated parts of the apparatus and therefore becomes more free-flowing than the polymer film located in the interior of the paper composite. This leads firstly to the surface structure of the parts of the apparatus being molded onto the windows and secondly, separating these free-flowing, sticky windows from the parts of the apparatus is barely possible without deformation.

Consequently, the present invention is based, inter alia, on the surprising finding that a polymer melt can be extruded from a die directly into the nip between two temperature-controlled rolls, on which in each case, for example, a paper web provided with fully penetrating cutouts 90 (cf. fig. 2) runs, and, as a result, a multilayer composite can be achieved which has both highly transparent viewing windows 100 and an excellent connection of the individual layers to one another as a result of the formation of a penetration zone 120.

The pair of rolls 50 chosen in this case is preferably two high-gloss polished steel rolls, and the

temperature of the pair of rolls is preferably set in such a way that the polymer melt, in the regions where the latter is in direct contact with the rolls, is cooled sufficiently quickly to an adequately low temperature, so that adhesion to the roll surface is largely prevented;, secondly, in regions where the polymer melt is in contact with the paper layers, the polymer melt maintains an adequately low viscosity in order to penetrate into the paper layers to a sufficient extent, forming a penetration zone 120, in order to permit an intimate bond.

Such a process presumably benefits from the fact that the melt solidifies more quickly in the event of direct contact with the temperature-controlled roll surface than when said melt is separated from the roll surface by a paper layer, which results in slower cooling as a result of a certain insulating effect of the paper layer. A roll temperature just below the softening temperature of the polymer in contact with the roll is preferably chosen, so that the polymer in direct contact with the roll immediately solidifies to form a sufficiently strong film but, in regions in which the polymer is separated from the roll by the paper layer, the polymer temperature still remains above the softening temperature for a certain time, in order to permit adequate penetration into the paper layer. In this connection, it may prove advantageous to preheat the paper before supplying the polymer melt. This can be done, for example, by means of infrared radiant heaters and also by means of hot air blowers. Alternatively, the paper web can be drawn through a heating duct or over a heating table for the purpose of being heated, or wrapped around one or more heated rolls, in particular heated calender rolls. The paper surface located on the inside in the composite is advantageously heated more intensely or brought to a higher temperature than the side facing away from the

polymer layer. This is done, for example, automatically when use is made of an infrared radiant heater which is aimed at the paper surface located on the inside in the composite.

Additionally or alternatively, the penetration of the polymer melt into the paper surface and/or the polymer adhesion can be promoted by the paper being pretreated. Adhesion promoters which improve the wettability of the paper with the polymer melt can prove to be advantageous, as can primers which additionally react with one or both components. Possible additives which can be added in the body of the paper or via the size pond in a size press, for example, or can be applied in the coating process, are for example dispersions and/or emulsions of polymers, in particular of amphiphilic polymers. Other pretreatment agents, primers as they are called, are known to those skilled in the art. Such additives are offered, for example by Trüb Emulsions Chemie AG, Ramsen, Switzerland, explicitly for the extrusion coating of paper. Furthermore, in order to improve the adhesion, the papers can be surface-activated with corona treatment, ozone treatment, flame treatment and further methods known to those skilled in the art.

The penetration of the polymer into the paper layers is additionally simplified by the melt film being in contact with the paper layer under increased pressure as compared with the direct contact with the roll. For these two reasons, adequately deep penetration of the melt into the paper layer, and therefore the formation of a penetration zone 120 necessary for an intimate bond, is made possible even at high process speeds. A further positive effect of the increased pressure in the transition region of the fully penetrating aperture 90 is that a certain flattening 70 of the edge around the aperture 90 is formed, which leads to a soft

transition between paper layers 10 and viewing window 100. As opposed to a sharp-edged transition, such as would be produced for example in the case of lamination of a paper layer having fully penetrating apertures with a film with the aid of an adhesive, the risk of inadvertent or else deliberate destruction of the bond by attacking this edge is reduced dramatically.

When two paper layers provided with fully penetrating apertures are used, the apertures preferably lie one above the other, at least in some regions (registered supply), in order to obtain completely transparent viewing windows, at least in some regions. However, the fully penetrating apertures do not necessarily need to be identical and/or congruent. In a preferred embodiment, at least one of the paper layers contains a watermark 110.

A cross section through a substrate according to the invention is shown in fig. 3 in a micrograph in a section at right angles to the plane of the paper. In this case, only one of the paper layers 10 is provided with a cutout 90, so that a region 91 is formed in which the polymer layer is exposed only on one side.

A system which produces a multilayer substrate according to the invention, which comprises a first layer of watermarked paper 214 having fully penetrating cutouts coordinated with the watermarks, and a layer of paper 202 having cutouts coordinated with the cutouts of the first layer, and comprising a polymer layer located on the inside, which is extruded in molten form in between the two paper layers brought into congruence and provided with fully penetrating cutouts, is shown schematically in fig. 4. In this case, continuous arrows designate material transport, dashed arrows designate data flow.

The paper web 202 made of conventional paper is in this case supplied from an unwind 201 and led first through a draw controller 203 and a web edge controller 204. The cutouts are then produced in a punching unit 205 and the punched-out portions are removed in an extraction system 206.

For its part, the paper web 214 made of watermarked paper is supplied via an unwind 212 and introduced into the method via a web edge controller 204. After this there is a watermark reader 213 and once more a punching unit 205 for producing the cutouts in a manner in register with the watermarks.

In parallel with this, the plastics layer or the material to be used for this purpose is prepared by the material being supplied from a dryer 207 and, if appropriate, mixed with a further material, for example a master batch from a metering device 208, and led via an extruder 209 to a die 211.

The two paper webs 202/214 are firstly heated on the side facing the plastics layer by an infrared radiant heater 210 in each case, and then rolled into the nip between the two rolls 50 with the simultaneous supply of the plastic from the die 211. The multilayer laminate produced in this way is then inspected in a web inspection final control facility 215 and marked with an inkjet marking system 216 that may be present, and led over a web accumulator/cutting table 217 and wound up at the end of the apparatus 218.

In a preferred form, a multilayer melt curtain comprising various polymers is supplied as the molten polymer. The structure of such a multilayer melt curtain is preferably symmetrical, for example having an inner layer of a first polymer and in each case an outer layer of a second polymer. The softening

temperature of the outer polymer preferably lies below that of the inner polymer or, respectively, the outer polymer has a lower melt viscosity than the inner polymer under the given processing conditions. In this way, by means of a suitable choice of the outer polymer, the bonding to the paper layers or the chemical resistance can be optimized, while a material for an optimized formation of the windows can be chosen as the inner polymer layer. Preferably, such a multilayer polymer layer can involve largely compatible polymers, such as various types of polyamides or various types of polyesters. However, multilayer polymer layers of different, not necessarily compatible, polymer classes can also be made, such as a polymer layer having an inner core of a polyamide and outer layers of polyolefins, for example polyethylene or polypropylene.

It can generally prove to be advantageous to lead the multilayer composite as tangentially as possible to the roll nip over a certain distance following the input of the polymer, or to lead it away from the curved roll surfaces at least before complete cooling and to lead it onward over a certain distance in a straight line, that is to say not curved around a radius, in order to permit the most complete solidification of the polymer layer possible in the finally desired attitude of the multilayer composite and to improve the planarity of the substrate.

It is possible for additives, such as marking substances, dyes, IR dyes, UV dyes, fluorescent dyes, substances with an anti-Stokes shift, security pigments, effect pigments, interference pigments, metal pigments, etc. to be added to at least one layer of the polymer layer possibly formed with multiple layers.

The polymer layer can also be formed thicker in some regions. This is possible in a particularly straightforward way with a segmented fishtail die, by individual lip segments being opened somewhat more widely. In this way, the possibility results of increasing the quantity of the polymer applied, for example in the region of the windows, in order to obtain more stable windows. In addition, in the region of the stripe in which a watermark is possibly located, it can also prove to be advantageous to configure the intermediate polymer layer somewhat thicker than in adjacent regions, in order to compensate for the thickness differences in the paper caused by the watermark and at the same time to maintain the contrast richness of the watermark. Furthermore, in this way a tactile material can be achieved in a straightforward manner, since the polymer layer that is thicker in some regions consequently exhibits detectable thickening and stiffening of the substrate in this region. Furthermore, it can prove to be useful to form the zones in which the edges of the security document subsequently come to lie to be somewhat thicker, since in particular these edges are susceptible to wear and tearing, which can be influenced beneficially by an increased input of polymer.

Furthermore, in the production process of a multilayer substrate according to the invention, additional material can also be incorporated between the layers. For example, it is conceivable to arrange for a security thread to run into the roll nip as well, which in this way is also incorporated firmly between the individual layers. Ideally, the thread is provided with an adhesive, as is not unusual for security threads, and is led over the temperature-controlled roll in such a way that it is already bonded to one paper layer by an adhesive bond, which means that the risk of the thread tearing as it enters the polymer

melt is minimized. Surprisingly, security threads can actually be processed at the same time by having them run into the roll nip, specifically even in cases in which the melting point of the thread material lies below the melt temperature of the polymer melt as it emerges from the die. It has been shown that, given a sufficiently short contact time, which is provided at the intended production speeds of more than 25 m/min, the threads do not melt. For example, security threads made of polyester and also security threads made of monoaxially oriented polypropylene (MOPP) have been co-processed successfully at speeds of 30 m/min and melt temperatures at the die of 325°C.

In a preferred embodiment, the threads are introduced over the window position in such a way that the thread is visible in the window in the finished product. In this case, the window can be a transparent window, which has been produced from two apertures brought over each other congruently, but can also be a semitransparent window, which is covered on one side by paper and which has been produced only from the aperture of a single paper layer. In the first case, the security thread is directly visible in the window from both sides of the document; in the second case it is directly visible only from one side of the document and is visible from the opposite side only in transmitted light. Of course, a plurality of windows can be accommodated in a document; in the case of semitransparent windows, the coverings can be located both on one and on the other side of the composite. In the last-named case, by using a security thread which is led through a series of semitransparent windows in which the transparent sides alternate, the result is the possibility of obtaining a window thread in the document which is visible in segments from one and from the other side of the document. By contrast, the papermaking methods of introducing a window thread only

permit the thread to be visible in segments from one side but not from the other side of the document.

Furthermore, it is conceivable to print the paper layers, for example in the inkjet process, on the inside in the multilayer laminate, during or before the processing process. In this way, a print is produced which is hidden in the document, is ideally individual and can be detected only when looked through and cannot be forged from outside. Of course, other further printing processes are also conceivable which apply a non-individual or else likewise an individual print that can be varied during the process. Alternatively or additionally, the print can also be applied to the outer paper surface. Offset printing units are preferably used, which can be synchronized with the punching units 205 in a straightforward manner.

Furthermore, during the processing process, it is possible to scatter, spray on or blow on substances such as mottled fibers, planchettes, pigments, dyes, metal fibers, metal flocks, etc. in the vicinity of the roll nip. This can be done both in the case of one and in the case of both paper layers but, alternatively or additionally, can also be done on the melt tail.

Furthermore, during the processing process, it is possible to arrange to dispense objects onto the paper web or to feed them in dispensed form onto a carrier, for example tuned electronic circuits, transponders, electronic chips, RFID chips, electrically conductive structures, such as printed, etched or deposited coils or antennas, metal platelets, magnetic particles, etc.

In a preferred process, the molten polymer layer is put in via a melt curtain, which is extruded from a die that is at a specific distance from the paper surface.

In an alternative production variant, the molten polymer layer is put in via a die which is in direct contact with the paper layer. In this way, ideally complete filling with polymer of the fully penetrating apertures in the paper layer can be achieved, while the quantity applied on the remaining paper layer turns out to be lower.

In a further production variant, the molten polymer layer is put in via an applicator roll, for example by using a three-roll unit, as is known from coating technology. In an alternative production variant, the molten polymer layer is put in via an engraved roll, as is known from coating technology. In an alternative production variant, the molten polymer layer is put in via a screen printing roll, as is known from coating technology.

The molten polymer layer can be interrupted, at least in some regions.

The molten polymer layer can be a pre-polymer, a polymer dispersion or a polymer solution which, during or following the bonding to the paper layer, cures chemically or physically and/or reacts and/or dries.

EXAMPLES

Example 1

In each case a paper with a weight per unit area of 35 g/m^2 which had punched-out portions in some regions was led over two temperature-controlled, high-gloss polished steel rolls. The pair of rolls was moved together, so that the two paper webs were in contact with each other. A melt made of an amorphous polyamide with a melt temperature of 300°C was poured into the roll nip from a die. The input quantity was about

35 g/m^2. The pair of rolls had a temperature of 75°C and the process speed was 40 m/min. The result was a multilayer composite which, in the regions of overlapping punched-out portions in the paper, had windows of polymer and which could not be separated without destruction. The windows had excellent transparency and a mirror-smooth surface. The process speed could be raised to 70 m/min without changing the quality of the composite and of the windows. The input quantity could likewise be reduced to about 25 g/m^2 without changing the quality of the composite and of the windows. Stable, even windows were still obtained.

Comparative example to example 1

In a belt press, two paper layers of a weight per unit area of 35 g/m^2, which had punched-out portions in some regions, were processed with a centrally located film of about 35 µm thickness made of the same amorphous polyamide as in example 1 to form a laminate. The temperature of the belt press was 280°C, the heated section had a length of about 1 m. After passing through the heated section, the laminate was led in the hot state through a pair of calender rolls with a line pressure of 2100 N/cm and subsequently cooled. In order to achieve adequate bonding, it was not possible to exceed process speeds of 5 m/min. At higher process speeds, the finished laminate could be delaminated in a straightforward way, at least in some regions. In the region of overlapping punched-out portions of the two paper layers, regions closed with film were formed, on which the woven structure of the supporting belt showed itself clearly. In order to prevent this structuring, high-gloss polished steel strip of 100 mm thickness was also supplied in these regions. After lamination had been carried out, the steel strip could no longer be detached from the polymer film without destroying the windows.

Example 2

In a manner analogous to the configuration of example 1, a composite was produced but in this case a polyamide 12 (PA12) was chosen as polymer. The melt temperature was 300°C, the input quantity about 45 g/m^2. The pair of rolls had a temperature of 50-60°C and the process speed was 40 m/min. The result was a multilayer composite which, in regions of overlapping punched-out portions in the paper, had polymer windows and which could not be separated without destruction. The windows had excellent transparency and a mirror-smooth surface. No turbidity because of crystallization of the PA12 could be observed.

Example 3

A composite was produced in a manner analogous to example 2. One paper layer was a security paper having gray-stage watermarks. The melt temperature was 265°C, the input quantity was varied from 13 g/m^2 (example 3a) to 35 g/m^2 (example 3b). The pair of rolls had a temperature of 95°C and the process speed was 40 m/min. The result was a multilayer composite which, in regions of overlapping punched portions, had polymer windows in the paper and which could not be separated without destruction. The windows had excellent transparency and a mirror-smooth surface. No turbidity because of crystallization of the PA12 could be observed.

Example 4

A composite was produced in a manner analogous to example 2. One paper layer was a security paper having gray-stage watermarks from a cylinder paper machine, the other paper layer was a plain paper without watermarks from a fourdrinier paper machine.

Example 5

A composite was produced in a manner analogous to the configuration of example 1. One paper layer was a security paper having gray-stage watermarks. The melt temperature was 325°C, the input quantity was varied from 20-35 g/m^2. The pair of rolls had a temperature of 125°C and the process speed was 30 m/min. The result was a multilayer composite which, in regions of overlapping punched portions, had polymer windows in the paper and which could not be separated without destruction. The windows had excellent transparency and a mirror-smooth surface.

Measured values

A comparison of some typical mechanical characteristic values (averages from values measured longitudinally and transversely with respect to the running direction of the paper web, testing air-conditioning conditions 23°C, 50% relative humidity) of the multilayer composites produced in the aforementioned examples is shown by the following table 2. Typical characteristic values from example 3 and example 4 are indicated in table 3. In this case, a standard banknote paper (BN paper) was used as a comparison.

Table 2

	Conventional security paper	Example 1	Comparative example to example 1	Example 2
Weight per unit area [g/m^2]	90	106	105	116
Breaking strength [N]	80	101	125	103
Wet breaking strength [N]	28	61	64	59
Wet strength [%]	35	60	51	57
Elmendorf tearing resistance [mN]	800	1087	1170	1669
Double fold number	1800	>5000	1623	>5000
Process speed [m/min]	-	70	5	40
Window quality	-	Smooth and highly transparent	Matt and structured	Smooth and highly transparent
Yellowing of the paper layers	-	unnoticeable	noticeable	unnoticeable

Table 3

		Example 3a	Example 3b	Example 4	Standard BN paper
Weight per unit area	g/m²	100	79	103	90
Proportion of polymer (L25)	g/m²	34	13	35	0
Thickness	µm	98	89	106	116
Cobb value *)	g/m²	13/13	14/15	23/12	40-70
Opacity	%	89	91	95	94
Burst pressure	kPa	400	310	360	350
Breaking force	MD	119	123	103	110
	CMD	58	41	62	50
Double fold number	MD	>6000**)	>10,000**)	>6000**)	2400
	CMD	>6000**)	1160	>6000**)	1800
Wet strength	%	65	57	57	45
Ash	%	4.2	5.2	6.2	4.1
Elmendorf	MD	1130	700	1090	860
	CMD	1230	910	1150	980
Window quality		Smooth and highly transparent	Smooth and highly transparent	-	-
Yellowing		None	None	None	None

*) Measure of water absorption capacity. At low values the susceptibility to soiling decreases

**) Testing stopped

LIST OF DESIGNATIONS

10 First paper layer
20 Second paper layer
30 Polymer melt
40 Fishtail die
50 Pair of rolls
60 Multilayer substrate
70 Flattened portion
80 Polymer layer
90 Aperture
91 Region in which the polymer layer is exposed only on one side
100 Viewing window
110 Watermark
120 Penetration zone
201 Non-stop unwind
202 Paper web
203 Draw controller
204 Web edge controller
205 Punching unit
206 Extraction system
207 Dryer
208 Metering device
209 Extruder
210 Infrared radiant heater
211 Die
212 Unwind/splicer
213 Watermark reader
214 Security paper web, watermarked paper
215 Web inspection final control facility
216 Inkjet marking
217 Web accumulator/cutting table
218 Winder

What is claimed is:

1. A method for the production of a multilayer substrate comprising at least one first paper layer, at least one second paper layer and at least one plastics layer of at least one thermoplastic polymer material arranged between the paper layers and joined to the paper layers,

wherein the plastics layer is fed in between the paper layers in the molten state, and the paper layers are then pressed between a pair of rolls in a continuous process, the result being a cohesive connection between the paper layers and the plastics layer, forming a penetration zone in which parts of the plastics layer are joined to the mass of the fiber composite of the paper layers, and the plastics layer having a weight per unit area of more than 20 g/m^2 and at most 100 g/m^2, wherein the pair of rolls is kept at a temperature above room temperature but below the temperature of the supplied melt of the materials used for the plastics layer.

2. The method as claimed in claim 1, for the production of a multilayer substrate as a print carrier in the form of a security paper.

3. The method as claimed in claim 1, wherein the plastics layer is applied with a weight per unit area of 22-80 g/m^2.

4. The method as claimed in any one of claims 1-3, wherein the plastics layer is applied with a weight per unit area of 25-40 g/m^2.

5. The method as claimed in any one of claims 1-4, wherein at least one paper layer, or both paper layers, is on average as thick as the plastics layer.

6. The method as claimed in any one of claims 1-5, wherein at least one paper layer, or both paper layers, is on average thicker than the plastics layer.

7. The method as claimed in any one of claims 1-6, wherein at least one of the paper layers has at least one cutout that is fully penetrating in some regions.

8. The method as claimed in claim 7, wherein both paper layers each have fully penetrating cutouts, and these cutouts are supplied in a registered manner such that, at least in some regions, viewing windows are formed.

9. The method as claimed in claim 7, wherein both paper layers each have fully penetrating cutouts, and these cutouts are supplied in a registered manner such that, at least in some regions, viewing windows are formed, the viewing windows being at least translucent or completely transparent.

10. The method as claimed in claim 7 or 8, wherein both paper layers each have fully penetrating cutouts, and

these cutouts are supplied in a registered manner such that, at least in some regions, regions are formed in which the plastics layer is exposed only on one side.

11. The method as claimed in any one of claims 1-10, wherein the thermoplastic polymer material of the plastics layer is a transparent material.

12. The method as claimed in any one of claims 1-11, wherein the thermoplastic polymer material of the plastics layer is polyethylene (PE), polypropylene (PP), polyvinyl chloride (PVC), soft PVC (PVC-P), polystyrene (PS), polycarbonate (PC), polymethyl methacrylate (PMMA), polyoxymethylene (POM), polyethylene terephthalate (PET), polyester, co-polyester, polyether ether ketone (PEEK), polyamideor copolymers or blends thereof.

13. The method as claimed in any one of claims 1-11, wherein the thermoplastic polymer material of the plastics layer is polyamide 6 (PA6) or polyamide 12 (PAI2), or amorphous co-polyamide thereof, or copolymers or blends thereof.

14. The method as claimed in any one of claims 1-13, wherein the thermoplastic polymer material of the plastics layer has a glass transition point above 0°C.

15. The method as claimed in any of the claims 1-13, wherein the thermoplastic polymer material of the plastics layer has a glass transition point above 40°C.

16. The method as claimed in any one of claims 1-15, wherein the material of the plastics layer is supplied at a melt temperature in the range from 250-350°C.

17. The method as claimed in any one of claims 1-15, wherein the material of the plastics layer is supplied at a melt temperature in the range from 250-350°C, at the outlet from the die, at a viscosity in the range from 500-1000 Pa s.

18. The method as claimed in any one of claims 1-17, wherein the production is carried out at a process speed of more than 70 m/min.

19. The method as claimed in any one of claims 1-17, wherein the production is carried out at a process speed of more than 100 m/min.

20. The method as claimed in any one of claims 1-19, wherein a line pressure in the range from 0-500 N/cm, is applied between the pair of rolls.

21. The method as claimed in any one of claims 1-19, wherein a line pressure in the range from 250-450 N/cm is applied between the pair of rolls.

22. The method as claimed in any one of claims 1-21, wherein the pair of rolls is kept at a temperature above room temperature but below the melt temperature or below

the glass transition point respectively of the materials used for the plastics layer.

23. The method as claimed in any one of claims 1-22, wherein the pair of rolls has its temperature controlled to a temperature T in the range from T = 50-100°C or from T = 50-180°C.

24. The method as claimed in any of the claims 1-22, wherein the pair of rolls has its temperature controlled to a temperature T, with respect to the glass transition temperature (T_g), in the range from T_g + 50°C> T > T_g- 50°C, or in the range from T_g + 30°C> T > T_g - 30°C, or, with respect to the melt temperature (T_m), in the range from T > T_m 100°C.

25. The method as claimed in any one of claims 1-22, wherein the pair of rolls has its temperature controlled to a temperature T with respect to the melt temperature (T_m), in the range from T_m > T > T_m - 100°C.

26. The method as claimed in any one of claims 1-25, wherein penetration zones have an average thickness in the range from 5-30 µm.

27. The method as claimed in any one of claims 1-26, wherein at least one of the rolls are high-gloss polished steel rolls.

28. The method as claimed in any one of claims 1-26, wherein both of the rolls are high-gloss polished steel rolls.

29. The method as claimed in any one of claims 1-28, wherein at least one of the rolls are anti-adhesion finished.

30. The method as claimed in any one of claims 1-29, wherein at least one of the rolls are rolls having a structured surface.

31. The method as claimed in any one of claims 1-30, wherein at least one of the rolls are engraved rolls.

32. The method as claimed in any one of claims 1-31, wherein at least one of the rolls are rolls having a ductile surface.

33. The method as claimed in any one of claims 1-32, wherein at least one paper layer is heated, substantially immediately before the supply of the plastics layer.

34. The method as claimed in any one of claims 1-32, wherein both paper layers are heated, substantially immediately before the supply of the plastics layer, on the side facing the plastics layer, by means of hot air blowers or infrared radiators or in a heating duct or over a heating table or over one or more heated calender rolls.

35. The method as claimed in any one of claims 1-34, wherein at least one of the paper layers has at least one security feature.

36. The method as claimed in any one of claims 1-34, wherein at least one of the paper layers has at least one security feature chosen from the group consisting of: watermarks, gray-stage watermarks, security threads, OVD, mottled fibers, security pigments, iridescent ink applications, chips, transponders, and magnetic strips.

37. The method as claimed in any one of claims 1-36, wherein the plastics layer has at least one security feature.

38. The method as claimed in any one of claims 1-36, wherein the plastics layer has at least one security feature, chosen from the group consisting of: mottled fibers, planchettes, metal fibers, marking materials, IR or UV dyes, security pigments, fluorescent dyes, effect pigments, interference pigments, metal pigments, reactive dyes, UV absorbers and stabilizers, these security features being added to the melt as additives or scattered in the vicinity of a roll nip.

39. The method as claimed in any one of claims 1-36, wherein the plastics layer has at least one security feature in the form of a security thread, the security thread being led into a roll nip.

40. The method as claimed in claim 39, wherein both paper layers in each case have fully penetrating cutouts and these cutouts are supplied in a registered manner in such a way that, at least in some regions, viewing windows or regions are formed in which the plastics layer is exposed only on one side, said security thread being visible in top view in the viewing windows or regions in the final multilayer substrate.

41. The method as claimed in claim 40, wherein the regions in which the plastics layer is exposed only on one side, being arranged in a registered manner alternately on the top side and underside of the multilayer substrate in the direction in which said security thread runs, in such a way that said security thread is visible from both sides in top view as a window thread.

42. The method as claimed in any one of claims 35-39, wherein the at least one security feature is machine-readable.

43. The method as claimed in any one of claims 1-42, wherein the molten polymer layer is put in via a die which is in immediate contact with the paper layers.

44. The method as claimed in any one of claims 1-43, wherein the molten polymer layer is put in via an engraved roll, a screen printing roll or an applicator roll.

45. The method as claimed in any one of claims 1-44, wherein the plastics layer is formed over substantially the entire area of the two paper layers.

46. The method as claimed in any one of claims 1-45, wherein the material of the plastics layer is supplied as a pre-polymer, a polymer dispersion or a polymer solution which, during or following the connection to the paper layers, cures chemically or physically or reacts or dries or gels.

47. A multilayer substrate which is produced in accordance with a method as claimed in any one of claims 1-46.

48. The multilayer substrate as claimed in claim 47, wherein at least one of the paper layers has at least one fully penetrating cutout in some regions.

49. The multilayer substrate as claimed in claim 47, wherein the two paper layers have at least one fully penetrating cutout in some regions, these two paper layers each having fully penetrating cutouts and these cutouts being supplied in a registered manner in such a way that viewing windows are formed or regions in which the plastics layer is exposed only on one side, at least in some regions, and that there are flattened portions in the edge region of the cutouts.

50. The multilayer substrate as claimed in any one of claims 47 to 49, wherein both paper layers in each case have fully penetrating cutouts, and these cutouts are supplied in a registered manner in such a way that, at least in some regions, viewing windows or regions are formed in which the plastics layer is exposed only on one side, and wherein the plastics layer has at least one security feature in the form of a security thread, the security threads being visible in top view in the viewing windows or regions in the final multilayer substrate.

51. The multilayer substrate as claimed in any one of claims 47 to 49, wherein both paper layers in each case have fully penetrating cutouts, and these cutouts are supplied in a registered manner in such a way that, at least in some regions, viewing windows or regions are formed in which the plastics layer is exposed only on one side, and wherein the plastics layer has at least one security feature in the form of a security thread, the security threads being visible in top view in the viewing windows or regions in the final multilayer substrate, the regions in which the plastics layer is exposed only on one side being in arranged in a registered manner alternately on the top side and underside of the multilayer substrate in the direction in which the security thread runs, in such a way that the security thread is visible from both sides in top view as a window thread.

52. The multilayer substrate as claimed in any one of claims 47-51, wherein the thermoplastic polymer material

of the plastics layer is a transparent material, and wherein, in the regions of viewing windows, these are transparent and have a smooth surface.

53. The multilayer substrate as claimed in any one of claims 47-52, wherein the material of the plastics layer is an amorphous polyamide, having a glass transition point above 20°C.

54. The multilayer substrate as claimed in any one of claims 47-52, wherein the material of the plastics layer is an amorphous polyamide 12 or an amorphous co-polyamide 12.

55. The multilayer substrate as claimed in any one of claims 47-54, wherein the paper layers have a weight per unit area in the range from 5-500 g/m^2.

56. The multilayer substrate as claimed in any one of claims 47-54, wherein the paper layers have a weight per unit area in the range from 10-80 g/m^2.

57. The multilayer substrate as claimed in any one of claims 47-56, having a double fold number of more than 1800.

58. The multilayer substrate as claimed in any one of claims 47-56, having a double fold number of more than 5000.

59. Use of a multilayer substrate as claimed in any one of claims 47-58 as a covering material, packaging material, card material, security paper, as a banknote, check, ticket, certificate, share document, bond document, deed, identity document, or access document.

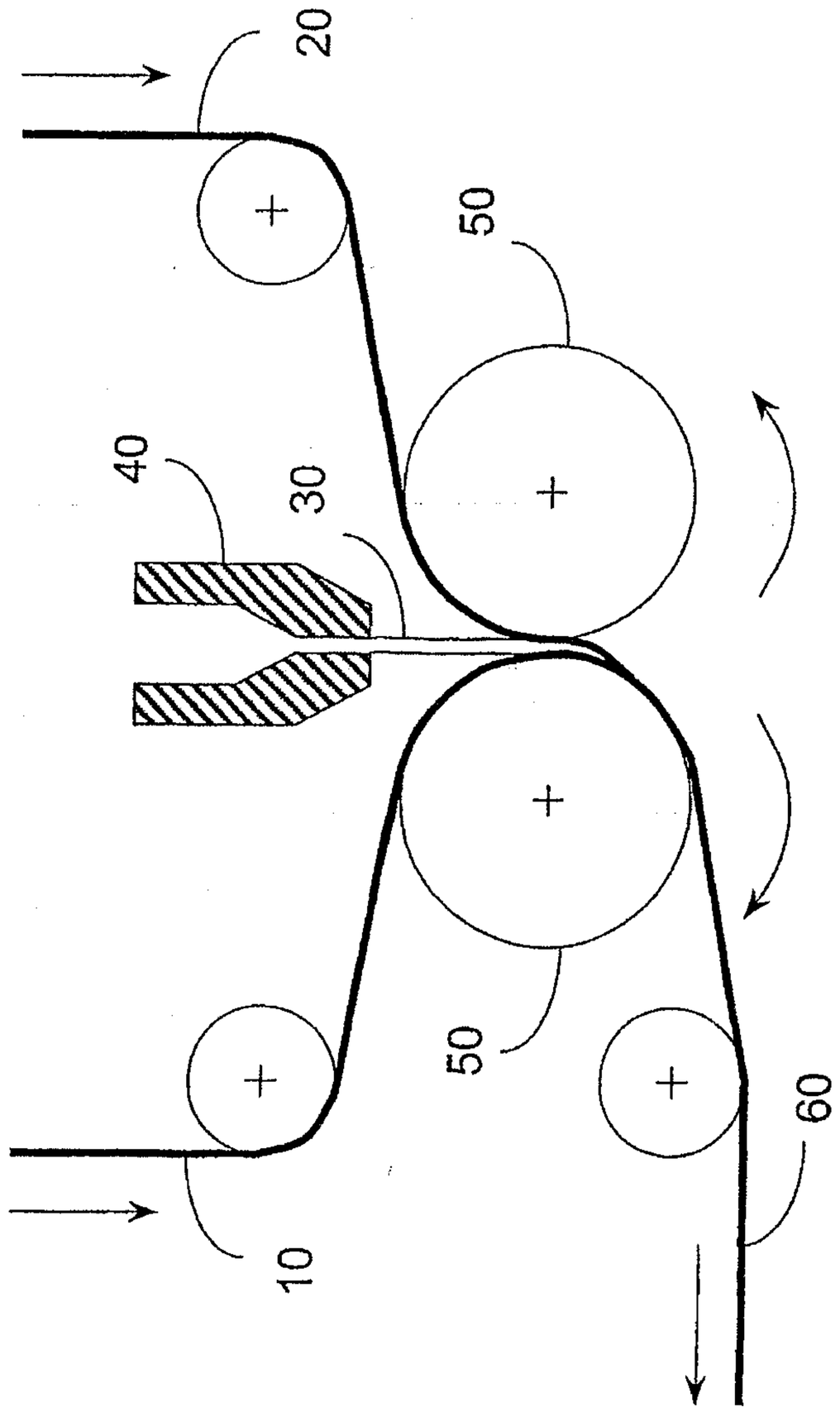

Fig. 1

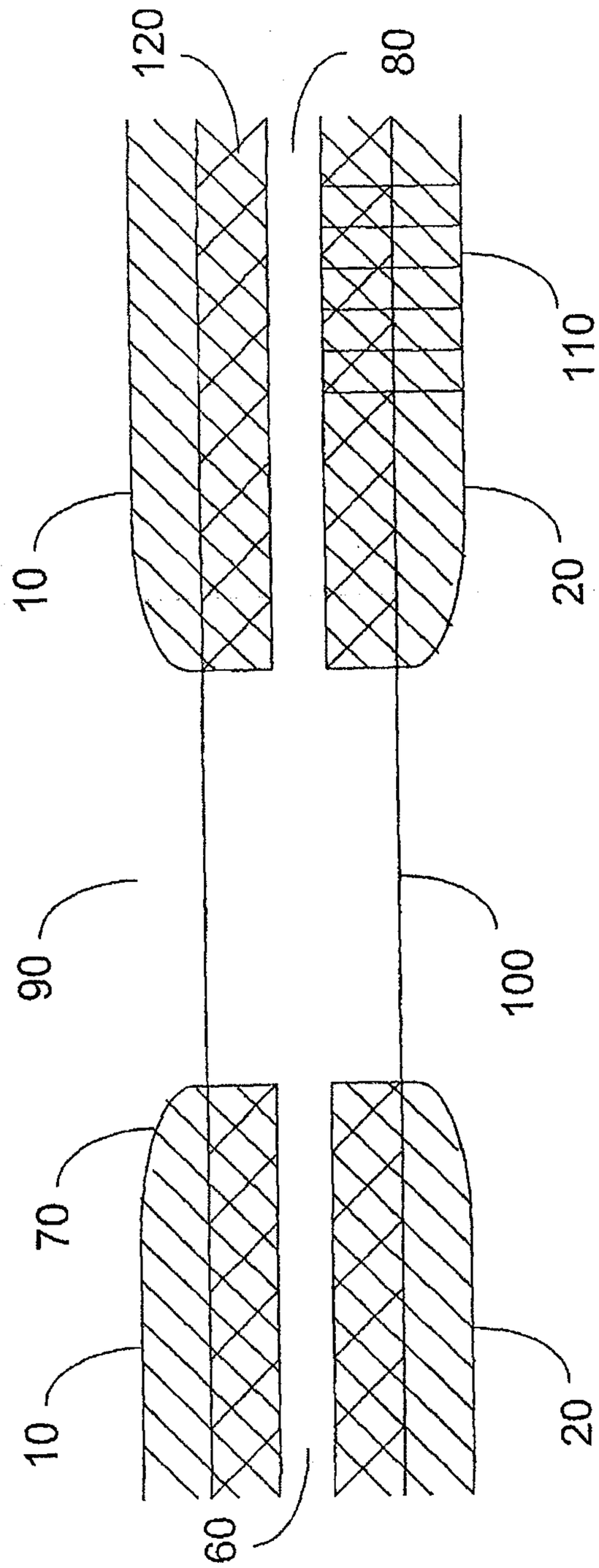

Fig. 2

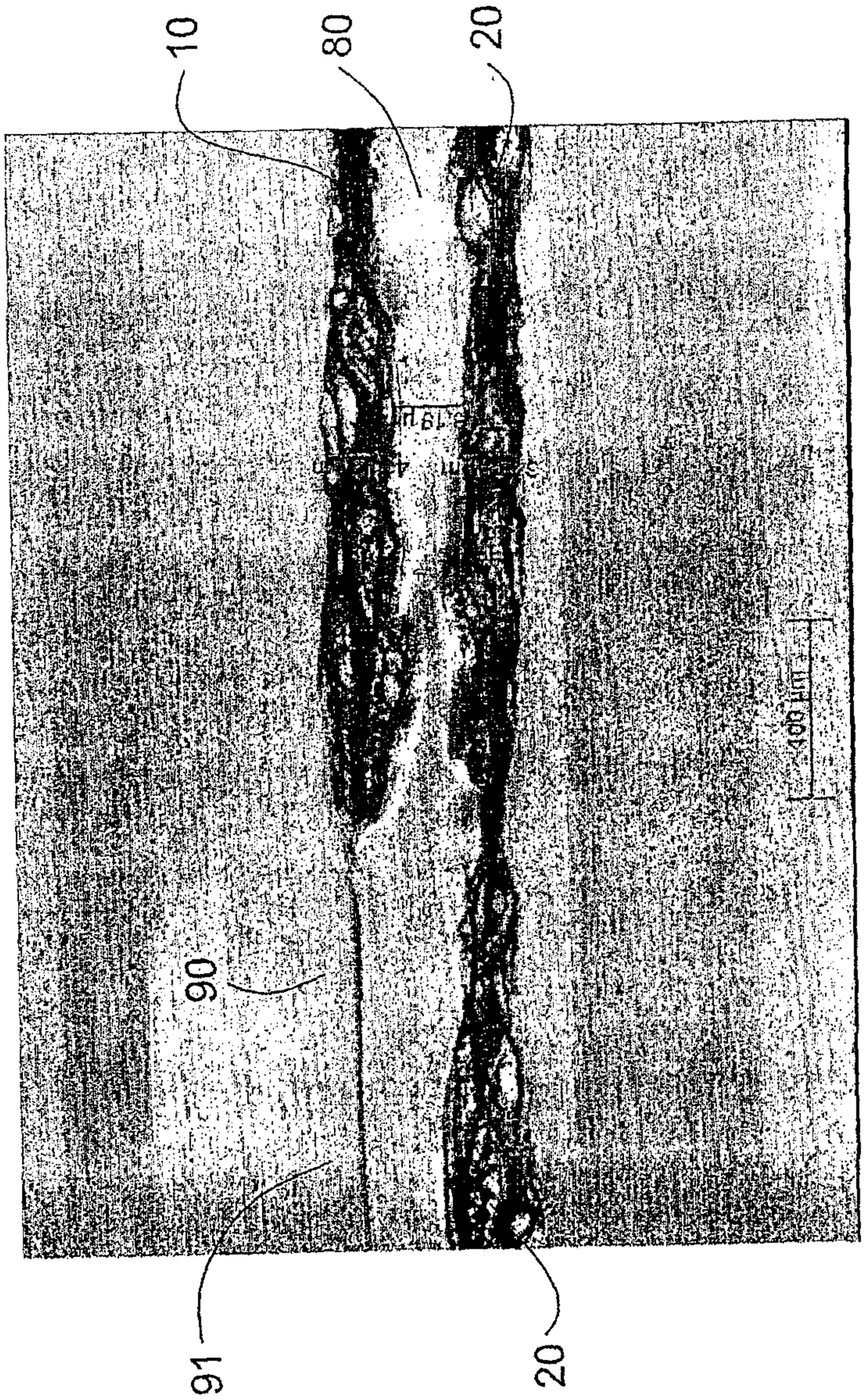

Fig. 3

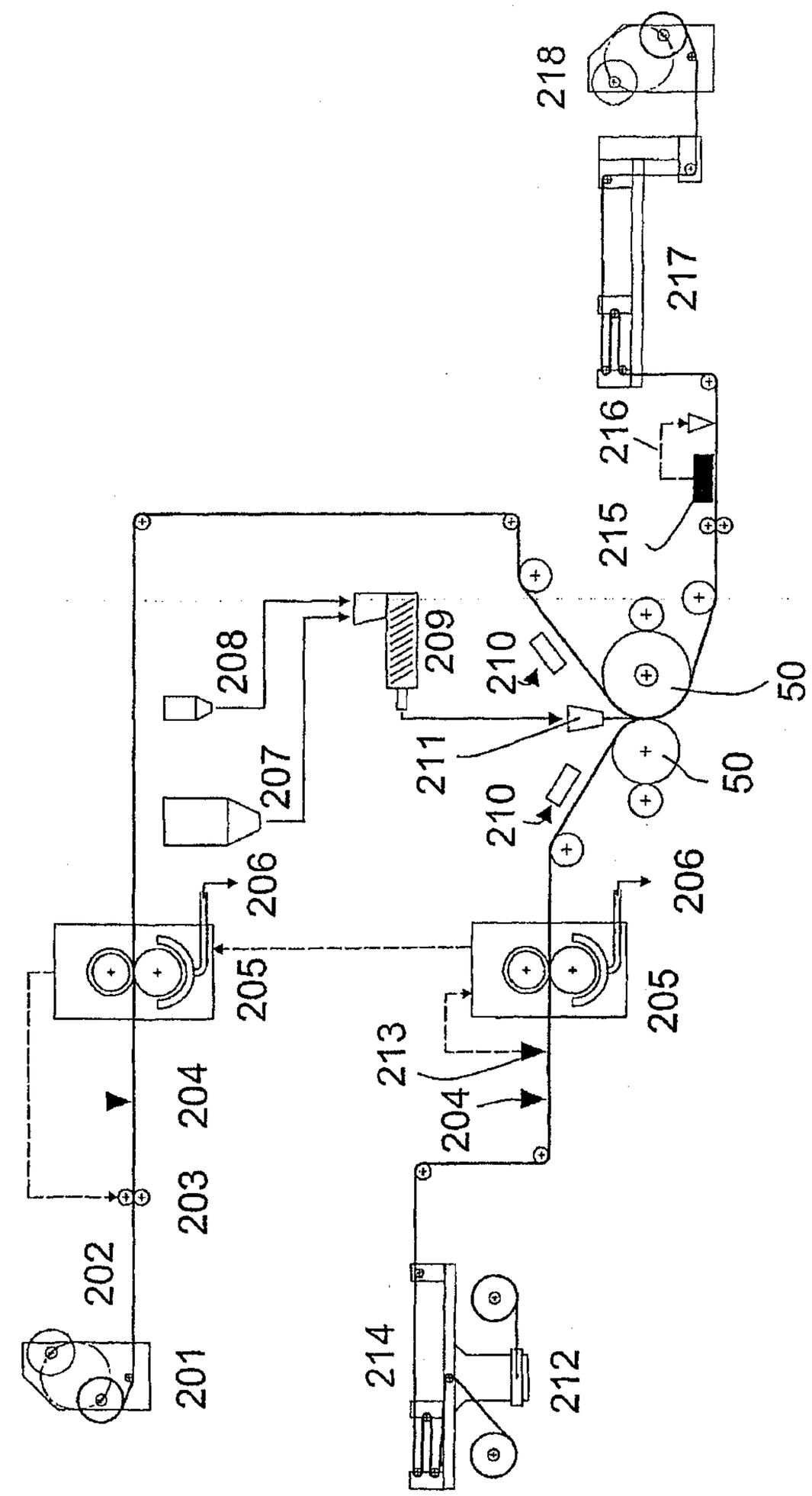
218
217
216
215
208
209
210
211
207
206
205
213
204
203
202
201
214
212
50

Fig. 4

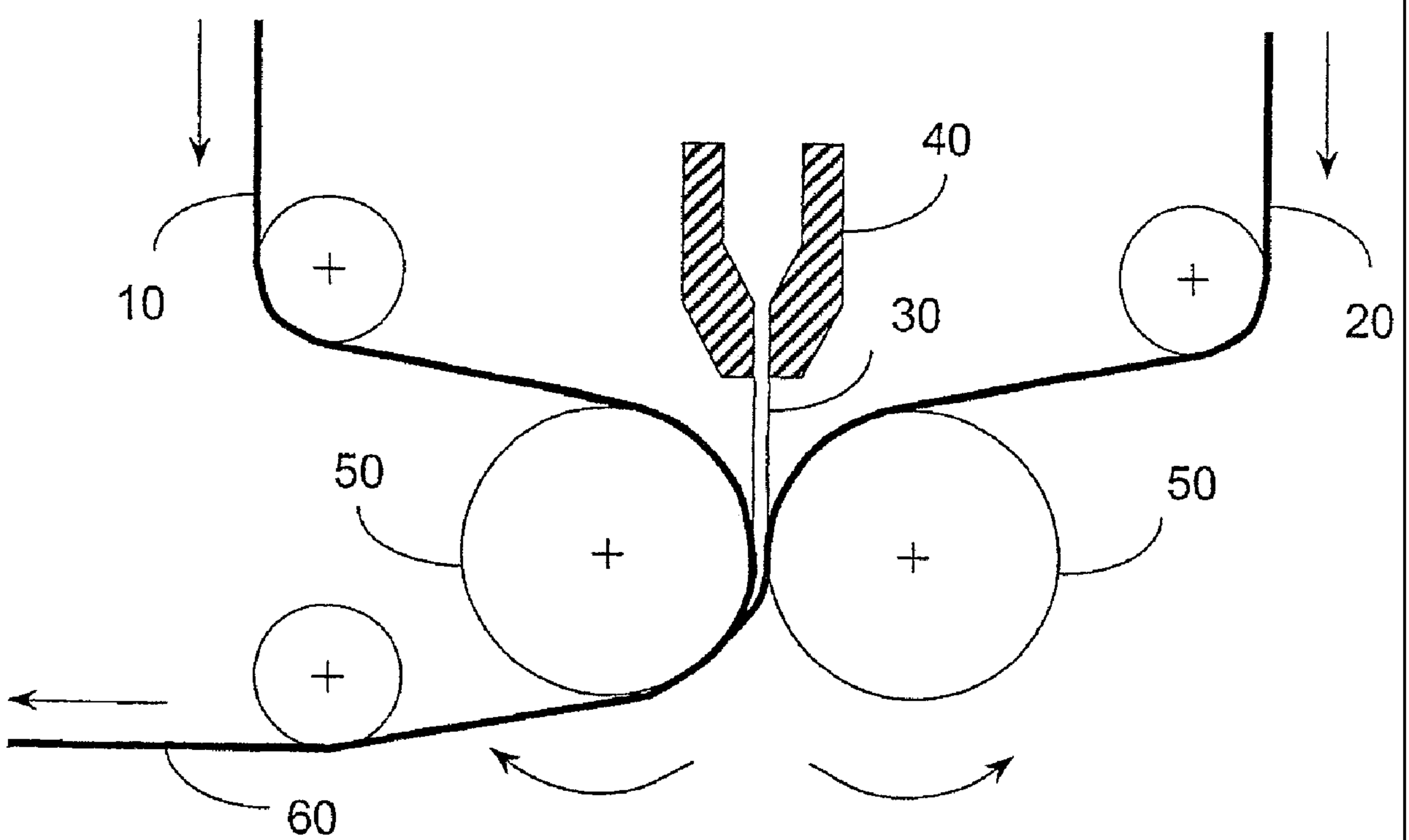
10
40
30
20
50
50
60