(12) UK Patent Application (19) GB (11) 2 117 929 A

(21) Application No **8308870**
(22) Date of filing **30 Mar 1983**
(30) Priority data
(31) **57/051693**
(32) **30 Mar 1982**
(33) **Japan (JP)**
(43) Application published
19 Oct 1983
(51) **INT CL³**
G05B 19/18
(52) Domestic classification
G3N 290 BB1
U1S 1646 G3N
(56) Documents cited
GB A 2054909
GB 1481739
(58) Field of search
G3N
(71) Applicant
Yamazaki Machinery Works Ltd, (Japan), 1 Azanorifune, Ooazoguchi, Ooguchi-cho, Niwa-gun, Aichi-ken, Japan
(72) Inventors
Hideaki Iguchi, Hajime Ohashi, Koji Kimura
(74) Agent and/or address for service
Marks & Clerk, 57—60, Lincoln's Inn Fields, London, WC2A 3LS

(54) **A numerical controller**

(57) The numerical controller, such as for a quadriaxial numerical control lathe, has a display (5) and a machining program memory (9) storing a machining program. The numerical controller is provided with waiting commanding means (11, 12, 10) capable of issuing instructions for writing a waiting command and a waiting dismissal command in the machining program to permit an instantaneous amendment of the program when a simulation of the program is conducted, by a simulation controller (7), to check the content of the program.

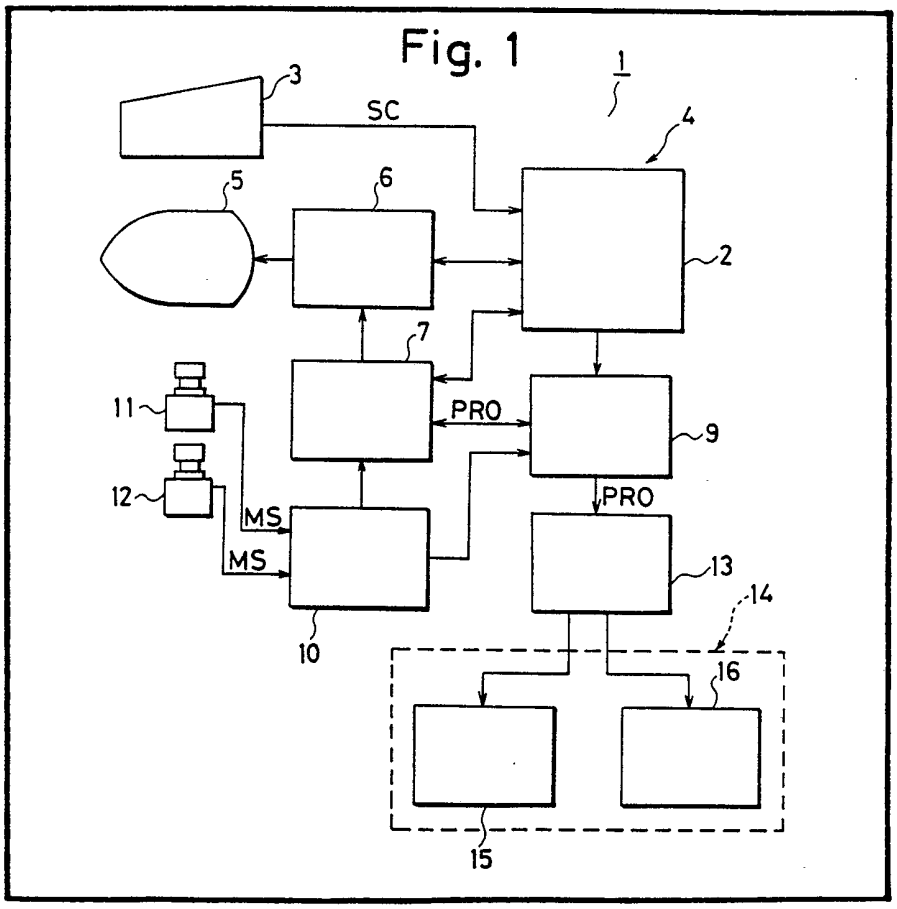

GB 2 117 929 A

2117929

Fig. 1

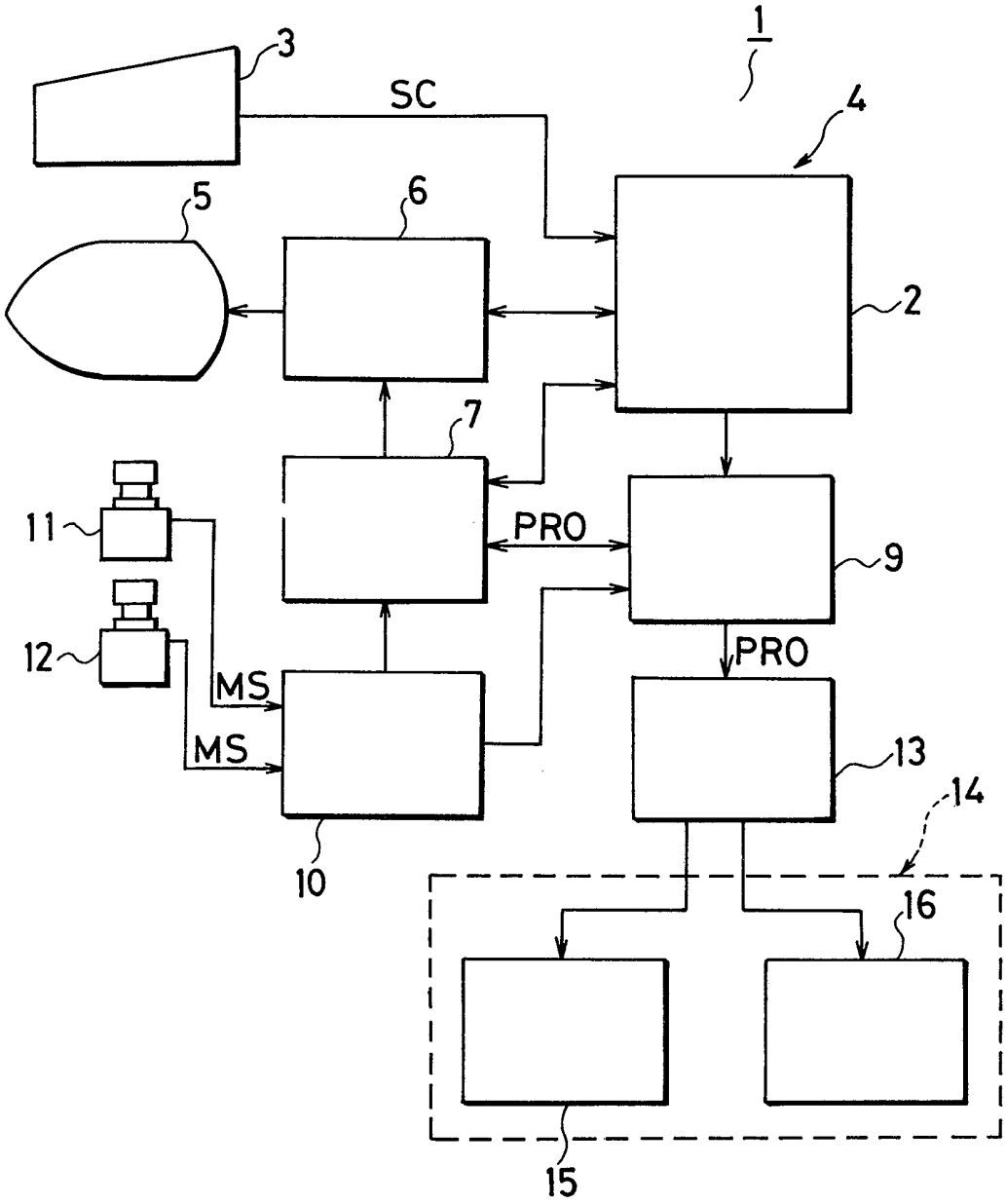

2117929

Fig. 2

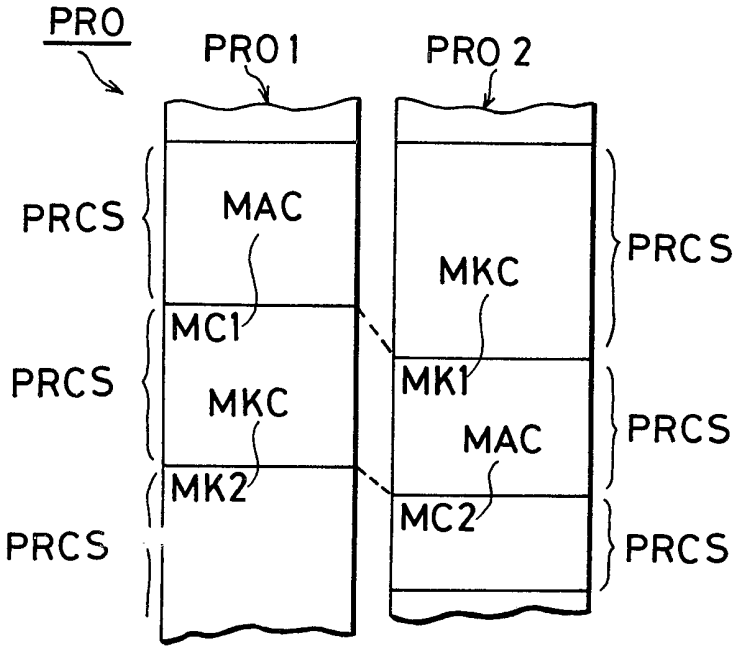

Fig. 3

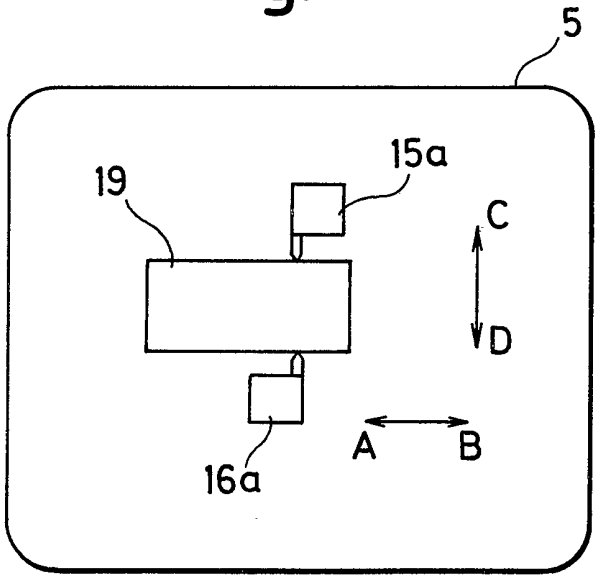

SPECIFICATION

A numerical controller

The present invention relates to a numerical controller particularly for use in a quadriaxial numerical control lathe.

Generally, the numerical controller for a quadriaxial numerical control lathe has a waiting command function for commanding the timing of execution of a machining unit by each tool rest in such a manner as to simultaneously commence the machining units by both tool rests or to start the machining units by both tool rests with a certain time interval, in order to avoid mutual mechanical interference between the two tool rests and to ensure high machining precision.

Hitherto, it has been necessary to put distinctive instructions in the machining program for the issuance and dismissal of the waiting command. Thus, it has been impossible to input the waiting command in the form of an amendment to the machining program from the controller side. However, recently it has been proposed to make an efficient and prompt check of the machining program by simulating the machining program on a display without actually operating the tool rests and other parts of the lathe. This method, however, encounters the following problem. In order to amend the machining program by insertion of, for example, a waiting command, it is necessary to recompose the whole part of the machining program in an amended form and to input the recomposed machining program to the numerical controller. This labourious work is an obstacle to achieving the prompt check of the machining program through simulation.

According to the invention, there is provided a numerical controller comprising a display, a machining program memory storing a machining program, and waiting commanding means capable of giving instructions for writing a waiting command and a waiting dismissal command in said machining program.

It is thus possible to provide a numerical controller improved to permit an instantaneous amendment of machining program in regard to the waiting command at the time of simulation of the machining program.

Preferred and/or optional features are set forth in claims 2—4.

The invention will now be more particularly described, by way of example, with reference to the accompanying drawings, in which:

Fig. 1 is a control block diagram of an example of a quadriaxial numerical control lathe to which the present invention is applied;

Fig. 2 is a schematic illustration of a machining program; and

Fig. 3 is an illustration of an example of simulation put on a display.

Referring first to Fig. 1, a quadriaxial numerical control lathe 1 has a main control section 2 constituting a numerical controller 4. The main control section 2 is connected to a keyboard 3, display controller 6 connected to a display 5 such as a cathode ray tube, simulation controller 7 and a machining program memory 9 storing a machining program PRO. A wait controller 10 is connected to the simulation controller 7. The wait controller 10 carries buttons 11 and 12 corresponding to the tool rests 15 and 16, respectively, and constituting a waiting commanding means. Two tool rests, namely, a first tool rest 15 and a second tool rest 16 which in combination constitute a mechanical section 14 of the lathe 1, are connected to the program memory 9 through a tool rest controller 13 for controlling the movement of the tool rests.

The quadriaxial numerical control lathe 1 having the described construction operates in a manner which will be explained hereinunder. The operator who wishes to check the machining program PRO in advance of the actual machining operation operates the keyboard 3 to issue a simulating operation command SC to the main control section 2 which in turn drives the simulation controller 7 to give an instruction for starting the simulation. Then, the controller 7 reads the machining program PRO out of the machining program memory 9 without delay, and displays images 15*a* and 16*a* of two tool rests on the display 5 together with an image 19 of a work to be machined, through the display controller 6. The images 15*a* and 16*a* of the tool rests are moved in accordance with the content of the machining program PRO. As shown in Fig. 2, the machining program PRO stores independent programs for respective tool rests 15 and 16 separately. Each of the machining programs PRO1 and PRO2 consists of a plurality of machining units arranged in accordance with the order or sequence of execution from the upper side in Fig. 2. The term "machining unit" is used throughout the specification to mean a machining process PRCS consisting of a series of machining operations executed consecutively by the same tool. Therefore, the controller 7 moves the images 15*a* and 16*a* of the tool rests on the display 5 in accordance with respective machining programs PRO1 and PRO2 in directions parallel to the axis of the spindle and perpendicular to the same, as indicated by arrows A, B and C, D in Fig. 3. The operator observes the movement of the images 15*a* and 16*a* on the display 5 and makes a judgement to hold either one of the tool rests, e.g. the tool rest 15, in the waiting condition if there is any possibility of, for instance, mutual interference between two tool rests. In such a case, he depresses the button 11 corresponding to the tool rest 15 so that the level of the waiting signal MS from the button 11 is changed from "1" to "0". This signal of "0" level is then inputted to the wait controller 10 which interrupts the machining program PRO in the program memory 9 and writes a waiting command MAC in the form of a predetermined waiting code in the machining process PRCS of the machining program PRO1 executed by the image 15*a* of the tool rest 15 appearing on the display 5.

Simultaneously, the controller 10 operates to stop the motion of the image 15*a* through the operation of the simulation controller 7. In consequence, the image 15*a* on the display 5 behaves as if it "waits" for the next instruction for starting the subsequent operation, in the process PRCS of the program PRO in which the waiting command MAC is written. Meanwhile, the image 16*a* of the other tool rest 16 continues to move in accordance with its machining program PRO2. After a while, the operator judges from the states of the images 15*a* and 16*a* on the display 5 that the possibility of interference has been cleared and the tool rest 15 should be dismissed from the waiting condition, and releases the button 11 accordingly. As a result, the signal MS from the button 11 changes back to level "1" so that the wait controller 10 writes a predetermined waiting dismissal command MKC in the instant process PRCS of the machining program PRO executed by the image 16*a* of the tool rest 16 at the moment at which the waiting command is dismissed. At the same time, the wait controller 10 restarts, through the operation of the simulation controller 7, the motion of the image 15*a* from the process PRCS in which the motion of the image 15*a* has been suspended, thereby to dismiss the image 15*a* from the waiting condition. Similarly, if the operator makes a judgement to hold the tool rest 16 in the waiting condition, he pushes the button 12 corresponding to the tool rest 16 to write a waiting command MAC in the program PRO2. When he judges to dismiss the waiting command, he releases the button so that the waiting dismissal command MKC is written in the program PRO1.

Thus, the operator manipulates the buttons 11 and 12 selectively while the machining programs PRO1 and PRO2 are simulated on the display 5, thereby to write the waiting command MAC and waiting dismissal command MKC in the machining programs. When the check of the machining program PRO through the simulation is completed, the tool rest controller 13 drives and controls the tool rests 15 and 16 in accordance with the amended machining program to effect the actual machining. In the actual machining operation, when the program proceeds to the process PRCS in which the waiting command MAC has been written as instructed by operator during the simulation, the tool rest controller 13 operates to stop the tool rest 15 (or 16) executing the machining program in which the waiting command MAC has been written. Meanwhile the other tool rest 16 (or 15) continues to execute the process in accordance with its program PRO2 (or PRO1). Then, as the program PRO2 (or PRO1) proceeds to the process PRCS in which the waiting dismissal command MKC is written, the controller 13 dismisses the waiting condition of the tool rest 15 (or 16) and restarts this tool rest 15 (or 16) from the machining process PRCS of the machining program PRO1 (or PRO2) in which the operation of the tool rest has been suspended.

In the embodiment described hereinbefore, the machining processes PRCS which constitute units of the machining for the first tool rest 15 and those for the second tool rest 16 are stored separately and independently from each other in the program PRO1 for the first tool rest 15 and in the program PRO2 for the second tool rest 16, respectively, as shown in Fig. 2. Needless to say, however, the processes PRCS can be stored in the memory 9 in any desired form, provided that the content of the memory distinctively determines by which tool rest each process PRCS should be executed and the sequence or order of execution of the processes PRCS.

As will be fully understood from the foregoing description, the numerical controller comprises waiting commanding means such as buttons 11 and 12 adapted to give instructions for writing a waiting command MAC and a waiting dismissal command MKC in the machining program PRO. This advantageously permits an instantaneous amendment concerning the waiting in the machining program PRO at the time of simulation and, hence, contributes to a speed-up of the check of the machining program.

Although the invention has been described through a specific embodiment, the described embodiment is only illustrative and not exclusive. Thus, various changes and modifications may be imparted to the described embodiment without departing from the scope of the invention which is limited solely by the appended claims.

Claims

1. A numerical controller comprising a display, a machining program memory storing a machining program, and waiting commanding means capable of giving instructions for writing a waiting command and a waiting dismissal command in said machining program.

2. A numerical controller according to claim 1, wherein said machining program memory stores said machining program in the form of machining units.

3. A numerical controller according to either one of claims 1 and 2, wherein said machining program memory stores machining programs corresponding to two tool rests of a quadriaxial numerical control lathe.

4. A numerical controller according to any one of claims 1—3, wherein said waiting commanding means has a construction having portions corresponding to two tool rests of a quadriaxial numerical control lathe.

5. A numerical controller substantially as hereinbefore described with reference to the accompanying drawings.

Printed for Her Majesty's Stationery Office by the Courier Press, Leamington Spa, 1983. Published by the Patent Office, 25 Southampton Buildings, London, WC2A 1AY, from which copies may be obtained.