(12) INTERNATIONAL APPLICATION PUBLISHED UNDER THE PATENT COOPERATION TREATY (PCT)

(19) World Intellectual Property Organization
International Bureau

(43) International Publication Date
24 November 2022 (24.11.2022)

WIPO | PCT

(10) International Publication Number
WO 2022/245347 A1

(51) International Patent Classification:
G01N 27/30 (2006.01) *G01N 27/403* (2006.01)
G01N 27/327 (2006.01)

(21) International Application Number:
PCT/US2021/033120

(22) International Filing Date:
19 May 2021 (19.05.2021)

(25) Filing Language: English

(26) Publication Language: English

(71) Applicant: **NOVA BIOMEDICAL CORPORATION** [US/US]; 200 Prospect Street, Waltham, Massachusetts 02454 (US).

(72) Inventors: **COOLEY, Michael**; 35 Dawson Drive, Sudbury, Massachusetts 01776 (US). **NGUYEN, Dieu-Tu**; 36 Rockland Street, West Roxbury, Massachusetts 02132 (US). **MOSLEY, Samantha**; 117 Blake Street, Hyde Park, Massachusetts 02126 (US). **PEI, Jianhong**; 96 Glen Street, Somerville, Massachusetts 02145 (US). **YOUNG, Chung Chang**; 12 Braemoor Woods Road, Unit 300, Salem, New Hampshire 03079 (US).

(74) Agent: **DELEAULT, Robert**; Mesmer & Deleault, PLLC, 41 Brook Street, Manchester, New Hampshire 03104 (US).

(81) Designated States *(unless otherwise indicated, for every kind of national protection available)*: AE, AG, AL, AM, AO, AT, AU, AZ, BA, BB, BG, BH, BN, BR, BW, BY, BZ, CA, CH, CL, CN, CO, CR, CU, CZ, DE, DJ, DK, DM, DO, DZ, EC, EE, EG, ES, FI, GB, GD, GE, GH, GM, GT, HN, HR, HU, ID, IL, IN, IR, IS, IT, JO, JP, KE, KG, KH, KN, KP, KR, KW, KZ, LA, LC, LK, LR, LS, LU, LY, MA, MD, ME, MG, MK, MN, MW, MX, MY, MZ, NA, NG, NI, NO, NZ, OM, PA, PE, PG, PH, PL, PT, QA, RO, RS, RU, RW, SA, SC, SD, SE, SG, SK, SL, ST, SV, SY, TH, TJ, TM, TN, TR, TT, TZ, UA, UG, US, UZ, VC, VN, WS, ZA, ZM, ZW.

(84) Designated States *(unless otherwise indicated, for every kind of regional protection available)*: ARIPO (BW, GH, GM, KE, LR, LS, MW, MZ, NA, RW, SD, SL, ST, SZ, TZ, UG, ZM, ZW), Eurasian (AM, AZ, BY, KG, KZ, RU, TJ, TM), European (AL, AT, BE, BG, CH, CY, CZ, DE, DK,

(54) Title: SOLID-STATE REFERENCE ELECTRODE BASED ON POLYMERIC MEMBRANE

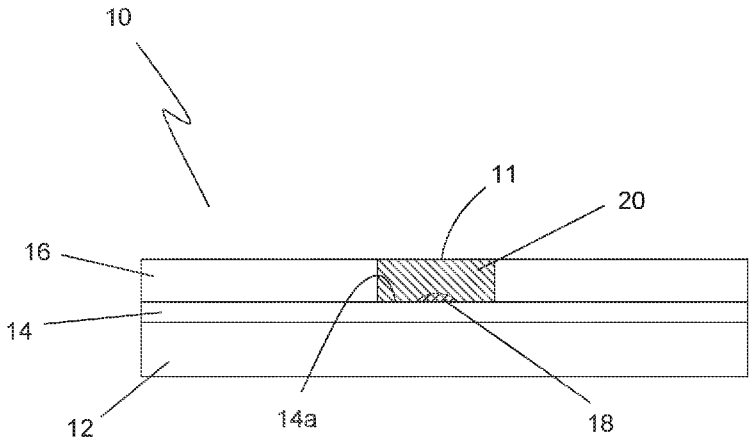

Fig. 1A

(57) Abstract: A solid-state reference electrode for use in whole blood, serum, plasma, and/or other biological fluids that includes an insulating support substrate, an electrically-conductive material disposed on the insulating support substrate where a first portion of the electrically-conductive material is an electrode portion and a second portion of the electrically-conductive material is an electrical contact portion, an electrode-forming insulating layer having an opening forming a well, a metal-metal salt layer disposed in the well over the electrode portion when the electrically-conductive material is not a metal-metal salt, the metal-metal salt layer selected from silver-silver chloride or mercury-mercurous chloride, and a hydrogel polymeric membrane disposed on the metal-metal salt layer forming the solid-state reference electrode, the hydrogel polymeric membrane being a polymeric hydrogel network containing a chloride salt from (i) inorganic salts of chlorides or organic salts of chlorides and (ii) a supporting electrolyte from salts of an anionic species.

WO 2022/245347 A1

[Continued on next page]

EE, ES, FI, FR, GB, GR, HR, HU, IE, IS, IT, LT, LU, LV, MC, MK, MT, NL, NO, PL, PT, RO, RS, SE, SI, SK, SM, TR), OAPI (BF, BJ, CF, CG, CI, CM, GA, GN, GQ, GW, KM, ML, MR, NE, SN, TD, TG).

Declarations under Rule 4.17:

— *as to applicant's entitlement to apply for and be granted a patent (Rule 4.17(ii))*

Published:

— *with international search report (Art. 21(3))*

Solid-state Reference Electrode Based on Polymeric Membrane

BACKGROUND OF THE INVENTION

[0001] 1. Field of the Invention

[0002] The present invention relates generally to a reference electrode. Particularly, the present invention relates to a solid-state reference electrode.

[0003] 2. Description of the Prior Art

[0004] For the potentiometric measurement of a broad spectrum of analytes, such systems require a measurement cell that includes an analyte indicating electrode and a reference electrode. For improved potentiometric sensors, the analysis is dependent on the half of the potentiometric sensor that is the reference electrode.

[0005] Examples of reference electrodes known in the art include saturated calomel electrodes and silver/silver chloride electrodes. These reference electrodes typically have a liquid junction portion formed in a distal end portion of a tube through which the solution of potassium or sodium chloride is allowed to flow out. When the measurement to be taken is in a living body or body fluid, the use of a saturated calomel electrode is a concern because such an electrode relies on mercury. The outflow of the potassium or sodium chloride solution even in the silver/silver chloride reference electrode has an effect on a living body. The liquid junction portion is formed of a porous material to reduce the amount of outflow, however, fully satisfactory results are not obtained.

[0006] Various attempts at re-designing a reference electrode have been proposed. One device discloses a miniature, solid-state, reference electrode in which a small amount of outflow of an internal electrolyte containing a halogen ion is reduced. The device has an electrical conductor consisting of platinum or silver and a sintered body formed on the periphery of the conductor and consisting of silver halide and silver oxide, a water-containing gel surrounding the electrode portion and containing halogen ion, a hollow tubular body accommodating the water-containing gel and having one end closed by a liquid-junction portion that is either a porous ceramic or by a partitioning wall having an ion permeable portion with a predetermined diffusion coefficient and volume.

[0007] A more recent reference electrode device is the use of micro- and nanostructured materials. The construction and quality of the reference electrode often influence (i.e. limits) the simplicity, disposability and analytical quality of potentiometric determination. Yet, the classical construction (Ag/AgCl in concentrated KCl) of the reference electrode still dominates in practice.

[0008] Major research into the reference electrode has been focused on the elimination of the liquid phase from the sensor making it all-solid-state without deterioration of performance, i.e. potential stability over time.

[0009] One such device discloses the incorporation of polypyrrole microvessels into a membrane composition (i.e. PVC) of the reference electrode. The polypyrrole microvessels were prepared by a photopolymerization method. A water-in-chloroform emulsion that contained pyrrole was irradiated to deposit polypyrrole onto aqueous droplets that yielded polypyrrole microcapsules. KCl and $AgNO_3$ solutions were used to prepare respective emulsions. The polypyrrole microvessels in the reference membrane contained AgCl and solid KCl. Stability data was determined after about 20 days of conditioning of the reference electrodes in 3 M KCl solution. Depending on the electrode layer (i.e. glassy carbon or polyoctylthiphene), the stability in various concentrations of test solutions (i.e. KCl, NaCl, $NaNO_3$, or KNO_3) were in the range of 4 to 9 mV. It is notable that none of the tests were performed in whole blood and yet the sensors required 20 days of conditioning of the reference electrodes in 3 M KCl solution to perform the stability analysis. It is further notable that the stability was still relatively high, i.e. 4 to 9 mV.

SUMMARY OF THE INVENTION

[0010] When making measurements using a potentiometric sensor, the accuracy of such a measurement is dependent on the stability of the reference electrode, which represents the other half of the potentiometric cell of the sensor. The construction and quality of the reference electrode limits the simplicity, disposability and analytical quality of the potentiometric determination. As described above, the classical construction of the reference electrode (i.e. Ag/AgCl in concentrated KCl) still dominates. In the recent past, there has been much research on eliminating the liquid phase from the sensor and, thus, making

it all solid-state without deterioration of performance. Unfortunately, this is relatively difficult to achieve.

[0011] The disadvantages of all prior art reference electrodes used for measuring whole blood, serum, plasma, other biological fluids, and/or aqueous solutions are that they either rely on a flowing reference junction to maintain a stable and low junction potential or have relatively large potential differences. Clearly, these prior art reference electrodes are not reliable since long-term storage and fluctuating junction potentials are serious problems that plague these prior art references for use as disposable, single-use, reference electrodes.

[0012] It is an object of the present invention to provide a solid-state reference electrode that has relatively stable junction potential.

[0013] It is an object of the present invention to provide a solid-state reference electrode that has a relatively minimal residual junction potential.

[0014] It is another object of the present invention to provide a solid-state reference electrode that has a relatively stable junction potential in liquids having a wide range of ionic concentrations.

[0015] It is a further object of the present invention to provide a solid-state reference electrode that does not need conditioning in a chloride solution before use.

[0016] It is yet a further object of the present invention to provide a solid-state reference electrode that has a relatively small volume of reference components.

[0017] It is still another object of the present invention to provide a solid-state reference electrode that has a long-term storage capability.

[0018] The present invention achieves these and other objectives by providing a solid-state reference electrode having a metal/metal halide electrode covered by a polymeric membrane.

[0019] In one embodiment of the present invention, there is disclosed a solid-state reference electrode for use in whole blood, serum, plasma, other biological fluids, and/or aqueous solutions. The solid-state reference electrode includes an insulating support substrate, an electrically-conductive material disposed on the insulating support substrate, an electrode-forming insulating layer with a well, a metal-metal salt layer disposed in the well, a hydrogel polymeric membrane disposed onto the metal-metal salt layer. The electrically-conductive material has

a first portion that is an electrode portion and a second portion that is an electrical contact portion. The electrically-conducting material comprises one of a conductive noble metal, an electrically conductive ink, or a metal-metal salt selected from the group consisting of silver-silver chloride, a mixture of silver and silver chloride, a silver metal coated with silver chloride, and mercury-mercurous chloride. The electrode-forming insulating layer has an opening where the insulating layer is disposed onto the insulating substrate layer where the opening forms a well and exposes the electrode portion of the electrically-conductive material. The metal-metal salt layer is disposed in the well over the electrode portion of the electrically-conductive material when the electrically-conductive material is not the metal-metal salt. The hydrogel polymeric membrane is disposed onto the metal-metal salt layer forming the solid-state reference electrode. The well has a predefined volume and exposes the electrode portion of the electrically-conductive material. The hydrogel polymeric membrane forms a polymeric hydrogel network containing (i) a chloride salt and (ii) a supporting electrolyte from salts of an anionic species.

[0020] In one embodiment of the present invention, the metal-metal salt is one of silver-silver chloride or mercury-mercurous chloride.

[0021] In one embodiment of the present invention, the chloride salt is one of inorganic salts of chlorides or organic salts of chlorides.

[0022] In one embodiment of the present invention, the solid-state reference electrode further includes a second polymeric membrane disposed on the hydrogel polymeric membrane where the second polymeric membrane is selected from hydrophilic silicon compounds or from lipophilic polymers.

[0023] In one embodiment of the present invention, the conductive noble metal is selected from one of gold, platinum, palladium, copper, indium, and tin oxide.

[0024] In one embodiment of the present invention, the chloride salt is selected from the group consisting of sodium chloride, potassium chloride, lithium chloride, choline chloride, 1-butyl-3-methylimidazolium chloride, 1-butyl-2,3-dimethylimidazolium chloride, 1-butyl-1-methylpyrrolidium chloride, 1,2-dimethyl-3-propylimidazolium chloride, and 1,3-dimethylimidazolium chloride.

[0025] In one embodiment of the present invention, the supporting electrolyte is selected from the group consisting of lithium, sodium or potassium salts of citrates, acetates, sulfonates or triflates.

[0026] In one embodiment of the present invention, the silicone compounds for the second polymeric membrane are selected from the group consisting of diluted silicon tetrachloride, aminopropyltriethoxysilane, n-[3-(trimethoxysilyl)propyl]ethylenediamine, methyltrimethoxy silane and phenyltrimethoxysilane.

[0027] In one embodiment of the present invention, the lipophilic polymers are selected from the group consisting of polyvinylpyrrolidone, polyvinyl alcohol, polyvinyl chloride (PVC), poly(methyl methacrylate), agar, gelatin, poly(urethane), cellulose acetate butyrate, cellulose acetate, and nitro cellulose.

[0028] In one embodiment of the present invention, the metal-metal salt layer is silver-silver chloride, the chloride salt in the hydrogel polymeric membrane is potassium chloride, and the supporting electrolyte is lithium acetate.

[0029] In one embodiment of the present invention, the hydrogel polymeric membrane is selected from the group consisting of polyacrylates, polymethacrylates, polyvinyl compounds, polyurethanes, polycarbamoyl sulfonates, polyureas, polyethers, crosslinkable Polyvinyl alcohol with styrylpyridinium pendent groups (i.e. PVA-SBQ), crosslinked protein matrix like gelatin, silk fibroin, Bis (trimethylsilyl)acetamide (i.e. BSA), crosslinked polysacharrides like cellulose, dextrans, cyclodextrans, alginates, chitosan, agar, and any combination thereof.

[0030] In one embodiment, the hydrogel polymeric membrane further includes (a) a hydrophilic plasticizer capable of filing the polymeric hydrogel network and solidifying and plasticizing the hydrogel polymeric membrane, and (b) a high molecular weight polymer capable of reinforcing the polymeric hydrogel network.

[0031] In one embodiment, the hydrophilic plasticizer is selected from at least one of glycerol, polyethylene glycol, ethylene glycol monomethyl ester, ethylene glycol, formamide.

[0032] In one embodiment, the high molecular weight polymer is one of polyethylene glycol, polyvinyl alcohol, polyvinylpyrrolidone, poly(2-hydroxyethyl methacrylate), and particulates like pyrogenic silica or latex.

[0033] In one embodiment, the hydrogel polymeric membrane includes poly-2-hydroxyethyl methacrylate, ethylene glycol as the hydrophilic plasticizer, and polyvinylpyrrolidone as the high molecular weight polymer.

[0034] In one embodiment, a method of making a solid-state reference electrode for use in whole blood, serum, plasma, and/or other biological fluids is disclosed. The method includes obtaining either (a) an insulating support substrate having an electrically-conductive material disposed on at least one side of the insulating support substrate, or (b) an insulating support substrate and disposing an electrically-conductive material onto at least one side of the insulating support substrate wherein a first portion of the electrically-conductive material is an electrode portion and a second portion of the electrically-conductive material is an electrical contact portion, the electrically-conducting material in (a) and (b) comprising one of a conductive noble metal, an electrically conductive ink, or a metal-metal salt selected from the group consisting of silver-silver chloride and mercury-mercurous chloride. The method further includes disposing an electrode-forming insulating layer having an opening onto the insulating support substrate where the opening forms a well exposing the electrode portion of the electrically-conductive material, forming a metal-metal salt layer on the portion of the conductive noble metal film exposed in the opening of the electrode-forming insulating layer, disposing a predefined amount of a precursor solution into the well, the precursor solution containing a chloride salt solution, a supporting electrolyte solution, a hydrogel polymer, a hydrophilic plasticizer, a high molecular weight polymer, a cross-linking reagent, and a radical initiator, and exposing the precursor solution in the well to radiation forming a hydrogel polymeric membrane and thereby forming the solid-state reference electrode.

[0035] In one embodiment, the forming step includes forming a silver-silver chloride layer.

[0036] In one embodiment, the method includes forming the precursor solution by mixing a predefined amount of a chloride salt solution, a predefined amount of a supporting electrolyte solution, a predefined amount of hydroxyethyl methacrylate, a predefined amount of ethylene glycol, a predefined amount of polyvinylpyrrolidone, a predefined amount of tetraehtylene glycol dimethacrylate and a predefined amount of 2,2-dimethoxy-2-phenylacetophenone.

[0037] In one embodiment, the method includes forming the precursor solution by mixing selecting an amount in a range consisting of 0.1 mM to saturated, 10mM to 500 mM and a concentration of 200 mM of the chloride salt, an amount in a range consisting of 10 mM to saturated, 1M to 6 M and 3 M to 5M of the supporting electrolyte salt, an amount in a range consisting of 20-80 wt.%, 30-70 wt.% and 45-55 wt.% of poly-2-hydroxyethyl methacrylate as the cross-linkable hydrogel polymer, an amount in a range consisting of 20-80 wt.%, 30-60 wt.% and 40-50 wt.% of ethylene glycol as the hydrophilic plasticizer, an amount in a range consisting of 0.5-10.0 wt.% and 1-5 wt.% of polyvinylpyrrolidone as the high molecular weight polymer, an amount in a range of 0.1-2.0 wt.% and 0.5-1.0 wt.% of tetraethylene glycol dimethacrylate as the cross-linking reagent, and an amount in the range of 0.01-2.0 wt.% and 0.5-1.0 wt.% of 2,2-dimethoxy-2-phenylacetophenone as the radical initiator.

[0038] In one embodiment, there is disclosed a method of making the hydrogel polymeric membrane for use in the solid-state reference electrode. The method includes (a) forming a precursor solution that includes a predefined amount of a chloride salt, a predefined amount of a supporting electrolyte salt, a predefined amount of cross-linkable hydrogel polymer, a predefined amount of hydrophilic plasticizer, a predefined amount of high molecular weight polymer, a predefined amount of a cross-linking reagent, and a predefined amount of a radical initiator, (b) disposing a predefined amount of the precursor solution onto a solid-state electrode containing a metal-metal salt electrolytic electrode, and (c) photo-irradiating the predefined amount of the precursor solution to ultraviolet light.

[0039] In one embodiment, the method further includes selecting potassium chloride as the chloride salt, selecting lithium acetate as the supporting electrolyte salt, selecting poly-2-hydroxyethyl methacrylate as the cross-linkable hydrogel polymer, selecting ethylene glycol as the hydrophilic plasticizer, selecting polyvinylpyrrolidone as the high molecular weight polymer, selecting tetraethylene glycol dimethacrylate as the cross-linking reagent, and selecting 2,2-dimethoxy-2-phenylacetophenone as the radical initiator.

[0040] In one embodiment, the method further includes selecting an amount of the chloride salt in a range from the group consisting of 0.1 mM to saturated, 10mM to 500 mM and a concentration of 200 mM of the chloride salt, selecting an

amount of the supporting electrolyte salt in a range from the group consisting of 10 mM to saturated, 1M to 6 M and 3 M to 5M, selecting an amount of poly-2-hydroxyethyl methacrylate as the cross-linkable hydrogel polymer in a range from the group consisting of 20-80 wt.%, 30-70 wt.% and 45-55 wt.%, selecting an amount of ethylene glycol as the hydrophilic plasticizer in a range from the group consisting of 20-80 wt.%, 30-60 wt.% and 40-50 wt.%, selecting an amount of polyvinylpyrrolidone as the high molecular weight polymer in a range from the group consisting of 0.5-10.0 wt.% and 1-5 wt.%, selecting an amount of tetraethylene glycol dimethacrylate as the cross-linking reagent in a range from the group consisting of 0.1-2.0 wt.% and 0.5-1.0 wt.%, and selecting an amount of 2,2-dimethoxy-2-phenylacetophenone as the radical initiator in the range from the group consisting of 0.01-2.0 wt.% and 0.5-1.0 wt.%.

BRIEF DESCRIPTION OF THE DRAWINGS

[0041] FIGURE 1 is a perspective view of one embodiment of the present invention showing a solid-state reference electrode.

[0042] FIGURE 1A is a cross-sectional view of the solid-state reference electrode shown in Fig. 1.

[0043] FIGURE 1B is a cross-sectional view of another solid-state reference electrode showing an optional second polymeric membrane disposed onto the hydrogel polymeric membrane.

[0044] FIGURE 2 is a perspective view of a potentiometric sensor having the solid-state reference electrode integrated with an ion-selective electrode.

[0045] FIGURE 2A is a cross-sectional view of the potentiometric sensor of Fig. 2.

[0046] FIGURE 3 is a perspective view of a potentiometric sensor having the solid-state reference electrode integrated with multiple ion-selective electrodes.

[0047] FIGURE 3A is a cross-sectional view of the potentiometric sensor of Fig. 3.

[0048] FIGURE 4 is a cross-sectional view of the solid-state reference electrode showing the electrically-conductive material sandwiched between two electrically-insulating substrates with windows aligned on either side where one window is the electrode portion and the other window is the contact portion.

[0049] FIGURE 5 is a graphical illustration showing the stability response of the solid-state reference electrode at various concentrations of sodium chloride solution.

[0050] FIGURE 6 is a graphical illustration showing the stability response of the solid-state reference electrode at various concentrations of calcium chloride solution.

[0051] FIGURE 7 is a graphical illustration showing the stability response of the solid-state reference electrode across a range of pH value solutions.

[0052] FIGURE 8 is a graphical illustration showing the response in whole blood for a potentiometric sensor incorporating the solid-state reference electrode and a solid-state potassium ion-selective sensor.

[0053] FIGURE 9 is a graphical illustration showing the response in whole blood for potentiometric sensor incorporating the solid-state reference electrode and a solid-state calcium ion-selective sensor.

DETAILED DESCRIPTION OF THE INVENTION

[0054] The general construction of solid-state reference electrode will first be described with reference to Figs. 1, 1A and 1B.

[0055] Fig. 1 is a perspective view of one embodiment of a planar, disposable, reference electrode 10 having a solid-state reference electrode 11. Fig. 1A illustrates a cross-sectional view of one embodiment of a solid-state reference electrode 11. Solid-state reference electrode 11 has a planar shape and includes an insulating support substrate 12 (i.e. base insulating layer), an electrically-conductive material 14 disposed on the insulating support 12 where a first portion of the electrically-conductive material is an electrode portion 14a (shown in Figs. 1A and 1B) and a second portion of the electrically-conductive material is an electrical contact portion 14b (shown in Fig. 1), and an electrode-forming insulating layer 16 having an opening 16a that forms a well 16b having predefined dimensions and exposing a portion of the conductive noble metal film 14. All layers are made of a dielectric material, preferably plastic. Examples of a preferred dielectric material are polyvinyl chloride, polycarbonate, polysulfone, nylon, polyurethane, cellulose nitrate, cellulose propionate, cellulose acetate, cellulose acetate butyrate, polyester, acrylic and polystyrene. The electrically-

conductive material may be an electrically-conductive, noble metal film, a metal-metal salt film such as silver-silver chloride, an electrically-conductive ink printed onto the insulating support substrate, or a tracing of the electrically-conductive material. The electrically-conductive material has an electrode portion and a contact portion where the electrical contact portion is used to electrically couple the contact portion to an analyte measuring circuitry.

[0056] The thickness of the electrode-forming insulating layer 16 as well as the dimensions of the well 16b define the thickness and aspect ratio of the chemistry that fills the well 16b and thus helps to control the volume and surface area of the electrode and its interfaces, among other details. The preferred thickness of the electrode-forming insulating layer 16 is 0.004 inches (0.1 mm) and the preferred diameter of opening 16a is 0.035 inches (0.89 mm). This creates a well 16b with a fill volume of about .033uL (33nL). Electrode-forming insulating layer 16 is preferably a medical grade, one-sided adhesive tape available from Adhesive Research, Inc., of Glen Rock, PA or Global Instrument Corporation (GIC) (Taiwan). Acceptable thicknesses of the tape for use in the present invention are in the range of about 0.001 in. (0.025 mm) to about 0.005 in. (0.13 mm). The preferred thickness is about 0.004 in. (0.1 mm). It should be understood that the use of a tape is not required. Electrode-forming insulating layer 16 may be made from a plastic sheet and may be coated with a pressure sensitive adhesive, a photopolymer, ultrasonically-bonded to insulating support substrate 12, silk-screened onto insulating support substrate 12, or 3D printed onto insulating support substrate 12 to achieve the same results as using the polyester tape mentioned.

[0057] A metal-metal salt layer (M/MX) 18 is disposed on the electrode portion of the conductive noble metal film 14 forming an electrolytic electrode and may cover all of the exposed portion of the conductive noble metal film 14 or only a portion of the exposed portion of the conductive noble metal film 14. A hydrogel polymeric membrane 20 is disposed on the metal-metal salt layer 18 and fills well 16b. It should be remembered that the metal-metal salt layer is not used when the electrically-conductive material is the metal-metal salt but is used when the electrically-conductive material is not the meta-metal salt.

[0058] Usable materials for the noble metal film 14 include, but are not limited to, gold, platinum, palladium, copper, indium, tin oxide, etc. In the present invention, the preferred noble metal film 14 is a gold film. Typically, the noble metal film 14 is evaporated on the insulating support substrate 12 or spot coated on the insulating support substrate 12. When a potentiometric sensor 30 as described later is manufactured, the noble metal film 14 is delineated into different electrically-conductive paths, which are electrically isolated from each other. Such electrically-conductive paths may be formed by scribing or scoring the noble metal film 14.

[0059] The electrolytic electrode 19 typically develops a referenced potential through insoluble silver or mercury salts that are in contact with their salts. In the present invention, a silver/silver chloride (Ag/AgCl) electrolytic electrode is preferred. There are different methods of making a Ag/AgCl electrolytic electrode. One method is to use a Ag/AgCl ink, but other methods are also acceptable. When the ink-based method is used, a drop of commercially available silver/silver chloride (Ag/AgCl) ink is dispensed and thermally cured onto the gold film 14 to serve as the metal-metal salt 18 based electrolytic electrode. Other methods to create a Ag/AgCl transducer is to dispense a drop of Ag ink or silver epoxy onto the gold surface and to thermally cure the ink or silver epoxy to form silver on the surface. Then the Ag surface is chloridized to form AgCl. In order to maintain a constant potential of the electrolytic electrode, a constant activity of Cl^- ion is typically used.

[0060] Fig. 1B illustrates a cross-sectional view of another embodiment of a solid-state reference electrode 11. This embodiment like the one illustrated in Fig. 1A has all of the same components except for an optional second polymeric membrane 22 disposed on the hydrogel polymeric membrane 20 creating a double-layered solid-state reference electrode. This optional second polymeric membrane 22 extends the lifetime and stability of the electrode in sample solutions. Additional advantages of the optional second polymeric membrane 22 includes enhancing adhesion between the polymeric reference electrode membrane 20 and the electrolytic electrode 19, and also eliminates electrode fouling and increases the electrode long-term stability. A suitable material for the optional second polymeric membrane 22 is selected from, but not limit to, a group

of the silicon compounds such as diluted silicon tetrachloride, aminopropyltriethoxysilane, n-[3-(trimethoxysilyl)propyl]ethylenediamine, methyltrimethoxy silane and phenyltrimethoxysilane; or from other lipophilic polymers such as polyvinylpyrrolidone, polyvinyl alcohol, PVC, poly(methyl methacrylate), agar, gelatin, poly(urethane), cellulose acetate butyrate, cellulose acetate, nitro cellulose, etc. In this application, cellulose acetate butyrate was used and the concentration is preferably in the range of 0.001 to 5%, more preferable at 0.02-1%, most preferable at 0.05 to 0.2%.

[0061] Turning now to Figs. 2 and 2A, there is illustrated an example of a potentiometric sensor 30 incorporating the monolayered solid-state reference electrode 11 and an ion-selective electrode 31. The ion-selective electrode 31 may be one capable of measuring ions in a sample such as Na^+, K^+, Ca^{2+}, Mg^{2+}, F^-, Cl^-, and the like. Fig. 2 illustrates one example of the potentiometric sensor 30 while Fig. 2A is a cross-sectional view of the monolayered solid-state reference electrode 11 as described above and shown in Fig. 1A, and an ion-selective electrode 31.

[0062] Figs. 3 and 3A illustrate one example of a multi-potentiometric sensor 40 incorporating the monolayered solid-state reference electrode 11 and multiple ion-selective electrodes 31. As described for Figs. 2 and 2A, each of the ion-selective electrodes 31 is capable of measuring a particular ion in the sample such as Na^+, K^+, Ca^{2+}, Mg^{2+}, F^-, Cl^-, and the like. Fig. 3 illustrates one example of the multi-potentiometric sensor 40 while Fig. 3A is a cross-sectional view of the monolayered solid-state reference electrode 11 and three ion-selective electrodes 32, 34 and 36 where each of the three ion-selective electrodes 32, 34, and 36 may measure a different ionic species such as, for example, a Na^+ ion, K^+ ion, Ca^{2+} ion, etc.

[0063] Fig. 4 illustrates another embodiment of a planar, disposable, reference electrode 10'. In this embodiment, the structure of the disposable reference 10' is similar to the disposable reference electrode 10 but with a structural difference. The difference lies in the location of the electrical contact portion. In this embodiment, the electrical contact portion of the electrically-conductive material is on the opposite side of the electrode portion and not co-planar with the electrode portion. The insulating support substrate also has an opening that exposes the

electrical contact portion to allow electrically coupling the disposable, solid-state reference electrode to an analyte measuring circuitry.

[0064] Polymeric membrane precursor

[0065] A UV curable hydrogel polymer-based membrane precursor solution mixed with salt of a chloride solution (KCl here) where the chloride as the ion source will participate with the Ag/AgCl electrode and the second supporting electrolyte (lithium acetate), which is used to eliminate the liquid junction potential and to maintain the activity of chloride ion. This mixed precursor solution is dropped on the top of the Ag/AgCl electrode surface. The solution is then photo polymerized into polymeric hydrogel by exposing it to 365 um UV light at 18 mW/cm^2 for 5 minutes under nitrogen environment with no more than 2% oxygen in the environment.

[0066] ***Ingredients of precursor solution***

[0067] The ingredients of the precursor solution include a chloride salt solution, a supporting electrolyte compound solution, a monomer, a hydrophilic plasticizer, a hydrophilic polymer, a cross-linking reagent, and a radical initiator.

[0068] Chloride salt solution

[0069] In the present invention, the salt of chloride compounds includes, but is not limited to, inorganic salts of chlorides such as sodium chloride, potassium chloride, lithium chloride, et.al. or organic salts of chlorides, such as choline chloride, 1-butyl-3-methylimidazolium chloride, 1-butyl-2,3-dimethylimidazolium chloride, 1-butyl-1-methylpyrrolidium chloride, 1,2-dimethyl-3-propylimidazolium chloride, 1,3-dimethylimidazolium chloride, et.al. The salt used in the solid-state reference electrode of the present invention for illustration purposes is KCl. The concentration of KCl is in the range of 0.1 mM to saturated solution, preferable in the range of 10 mM to 500 mM, and more preferable with a concentration of 200 mM.

[0070] Supporting Electrolyte

[0071] Because the volume of the hydrogel polymeric membrane 20 is so small and in order to maintain a good performance of the solid-state reference electrode and eliminate the liquid junction potential, another supporting electrolyte is used in the present invention. The supporting electrolyte compound solution is added to maintain a constant liquid junction potential. The supporting electrolyte is chosen from lithium, sodium or potassium salts of anionic species, such as citrates, acetates, sulfonates, triflates or similar compounds. In the present invention, lithium acetate is used in the present invention for illustration purposes. The concentration of lithium acetate used is in a range of 10 mM to saturated solution, preferably in a range of 1 M to 6.0 M, and more preferably in a range of 3 M to 5 M. Where the Nernst equation deals with “activity” of chloride ions rather than concentration, it is possible to achieve potentials comparable to conventional saturated KCl electrodes, provided that the hydrogel polymeric membrane 20 itself contains sufficient salt. Lithium acetate was found to be more soluble in the polymeric membrane precursor mixture used in forming the hydrogel polymeric membrane 20.

[0072] Monomer

[0073] The monomer is a hydrogel polymer that forms a hydrogel porous polymeric matrix, which is a cross-linked polymer network, that can swell with water. The swelling properties of hydrogels can be tailored by controlling the porosity and hydrophilic properties of the polymer. While any polymer hydrogel matrix can be used, including, but not limited to, polyacrylates, polymethacrylates, polyvinyl compounds, polyurethanes, polycarbamoyl sulfonates, polyureas, polyethers, cross-linkable PVA-SBQ, or even a crosslinked protein matrix like gelatin, silk fibroin, BSA, etc., or crosslinked polysacharrides like cellulose, dextrans, cyclodextrans, alginates, chitosan, Agar, etc., or any combination of these as composite materials, poly-2-hydroxyethyl methacrylate (pHEMA) was selected to demonstrate the present invention. Poly-2-hydroxyethyl methacrylate is made from the monomer hydroxyethyl methacrylate (HEMA). The concentration of HEMA is in the range of 20% to 80%, preferably in the range of 30% to 70% and more preferably in the range of 45% to 55%. Poly-2-

hydroxyethyl methacrylate was selected based on its unique properties of being a stable methacrylate backbone with neutral, non-ionic, hydrophilic hydroxyethyl ligands, is non-toxic and biocompatible with anti-fouling properties, making it usable in testing blood and serum samples. Because it is made from HEMA, the HEMA monomer solution is easily dispensed into the well 16b, taking the shape of well 16b, and forming to the topography of the substrate/Au/AgCl surfaces creating good adhesion to the various surfaces of the substrate and creating stable interfaces.

[0074] Hydrophilic plasticizer

[0075] In the dry state of pHEMA, the so called “xerogel” state, the pHEMA gel is not flexible. Because of the more hydrophobic methacrylate backbone, it takes a relatively long time for the dry pHEMA xerogel to absorb enough water to fill its capacity. This long absorption time is not a very good characteristic for something that needs to wet-up relatively quickly and function right out of the package. The hydrophilic plasticizer fills the polymeric hydrogel network, and effectively solidifies and plasticizes the gel. The hydrophilic plasticizer also allows ions to pass through the membrane. The hydrophilic plasticizer is selected from the group including glycerol, polyethylene glycol, ethylene glycol monomethyl ester, ethylene glycol, formamide, and the like. These substances are low molecular weight, hygroscopic materials that can fill the pores of the hydrogel polymeric network, effectively plasticizing the gel. Further, they do not evaporate away and remain in the gel structure during storage. Ethylene glycol (EG) was chosen in the present invention for demonstration purposes because ethylene glycol is closest to water in size and density. The hydrophilic plasticizer puts the hydrogel in a swollen-flexible state, allowing the polymer to react with samples more readily as they enter the gel structure. As anti-freeze agents, these hydrophilic plasticizers further help protect the hydrogel from changes in low temperature storage. The amount of hydrophilic plasticizer in the formulation will depend on the configuration of the sensor and design of the substrate.

[0076] A further role of hydrophilic plasticizer in the formula is as a hydrogen bond donor that can dissociate lithium acetate, which acts as a hydrogen bond acceptor in this case. This combination is an ionically conductive liquid at room

temperature that fills the pores of the hydrogel matrix and helps to stabilize the membrane potential at the sample-to-gel interface and ensures that the double layer close to the electrode surface has a high metal ion concentration. An additional benefit of using ethylene glycol (EG) is that the equally-transferring salt (LiAc in this invention) is soluble in EG and forms the ionically conductive liquid that fills the pores of the hydrogel matrix. The concentration of ethylene glycol is in the range of 20% to 80%, preferably in the range of 30% to 60%, and more preferably in the range of 40% to 50%.

[0077] Hydrophilic polymer

[0078] Using low molecular weight, hydrophilic plasticizers like ethylene glycol or propylene glycol, which have very low viscosity, low surface tension, and would wet to the substrate too easily, creates thin layers that are not very reproducible when dispensed. An inert, high molecular weight “filler” is needed to increase viscosity and keep the solution in place once applied to the substrate and to enhance the adhesion to the electrode surface. Hydrophilic neutral polymers such as PEG, PVA, PVP, and even pHEMA itself as well as particulates like fumed silica or latex can all be used for this purpose. For demonstration purposes of the present invention, PVP was selected since it dissolved more readily into HEMA monomer than other materials. The long polymer chain entangles into the pHEMA matrix so it won’t leech out over time. It also helps to re-enforce the structure of the gel. The concentration of PVP (specifically PVP K90) is in the range of 0.05% to 10%, and preferably in the range of 1% to 5%.

[0079] Cross-linking agent

[0080] Crosslinking reagents contain at least two reactive groups that will connect themselves to the functional groups such as primary amines, sulfhydryls, carbonyls, carbohydrates and carboxylic acids. In this application, tetraethylene glycol dimethacrylate (TEGDMA) was used as the crosslinking reagent. TEGDMA is a bifunctional methacrylate molecule which can be used as a cross-linking agent in free radical chain polymerization to form a 3D gel structure. TEGDMA has a low volatility and is a non-flammable product with high solubility in

water. The concentration of the cross-linking reagent is in a range of 0.1% to 2%, and more preferably in a range of 0.5% to 1%.

[0081] Radical initiator

[0082] Photoinitiated polymerization is one of the polymerization techniques of monomers, where the polymerization is initiated by reactive species such as radicals, cations, or anions that can be generated by photo-irradiation. Liquid monomers can be turned to a solid or semi-solid by the polymerization.
A photoinitiator is a molecule that creates reactive species (free radicals, cations or anions) when exposed to radiation (UV or visible). Synthetic photoinitiators are key components in photopolymers. 2,2-Dimethoxy-2-phenylacetophenone (DMPA) is a photoinitiator, which is used to initialize radical chain polymerization e.g. in the preparation of acrylate polymers. Under the influence of UV light, the molecule will form radicals which initiate the radical polymerization, and was used in the present invention. The concentration of the radical initiator is in a range of 0.01% to 2%, and more preferably in a range of 0.5% to 1%.

[0083] Table 1 illustrates an example of a precursor solution for making the hydrogel polymeric membrane 20.

Table 1

Reference Membrane for SSRE

pHEMA Precursor Solution		
Chemical	**Weight(g)**	**Wt%**
HEMA	5.755	51.36
EG	5.000	44.62
TEGDMA	0.100	0.89
DMPA	0.100	0.89
PVP K90	0.250	2.23
Total	11.205	

Chemical	**Concentration**
Li-Acetate	4.5 M
KCl	200 mM

[0084] Turning now to Fig. 4, there is illustrated a graphical illustration showing the stability response at various concentrations of a NaCl solution as measured between the solid-state reference electrode versus a commercially available reference electrode (saturated calomel electrode (SCE)). The solid-state reference electrode of present invention is used as the working electrode. The results show that the potential of the solid-state hydrogel membrane reference electrode of the present invention is not affected by the concentration of NaCl in the sample solution and shows good stability over a very large concentration range.

[0085] Fig. 5 is a graphical illustration showing the stability response at various concentrations of a $CaCl_2$ solution as measured between the solid-state reference electrode versus a commercially available reference electrode (saturated calomel electrode (SCE)). The solid-state reference electrode of present invention is used as the working electrode. The results show that the potential of the solid-state hydrogel membrane reference electrode of the present invention is not affected by the concentration of $CaCl_2$ in the solution and shows good stability over a very large concentration range.

[0086] Fig. 6 is a graphical illustration showing the stability response across a range of pH value solutions as measured between the solid-state reference electrode versus a commercially available reference electrode (saturated calomel electrode (SCE)). The solid-state reference electrode of present invention is used as working electrode. The results show that the potential of the solid-state hydrogel membrane reference electrode of the present invention is not affected by the pH values of the solution and shows good stability over a very large pH range.

[0087] Fig. 7 is a graphical illustration showing the response to potassium ion concentration as measured between the solid-state reference electrode of the present invention and a potassium ion selective electrode. The solid-state reference electrode of present invention is used as the reference electrode and a potassium ion selective electrode is used as the working electrode. The output of the potential response E (mV) of the potassium ion selective electrode versus the log of potassium concentration shows good linearity response with a slope 55.8 mv.

[0088] Fig. 8 is a graphical illustration showing the response to calcium ion concentration as measured between the solid-state reference electrode of the present invention and a calcium ion selective electrode. The solid-state reference electrode of present invention is used as the reference electrode and a calcium ion selective electrode is used as the working electrode. The output of the potential response E (mV) of the calcium ion selective electrode versus the log of calcium concentration shows good linearity response with a slope of 27.9 mv.

[0089] **Precision in whole blood samples**

[0090] In all measurements made using the solid-state reference electrode of the present invention, no conditioning (i.e. hydrating) of the solid-state reference electrode was performed or required before any of the tests were performed. The reference in the Nova Biomedical analyzer (Nova Stat Profile Prime) is a flowing reference. The following data tables show the reliability and accuracy of the present invention in whole blood, serum, plasma and/or other biological fluids using the solid-state reference electrode directly from dry storage without pre-conditioning (i.e. hydrating) of the solid-state reference compared to the Nova Biomedical analyzer reference.

[0091] Table 2 shows the response for potassium ion reproducibility measurements by a potentiometric sensor incorporating a potassium ion-selective working electrode and a reference electrode of the present invention that is a solid-state hydrogel membrane reference. Twenty (20) potassium sensors 30 similar to that illustrated in Figs. 2, 2A were used to measure a whole blood sample having a concentration of 4.58 mmol/L of potassium ion. As shown, the mean of the 20 measurements was 4.63 mmol/L of potassium with a coefficient of variation of 3.6%.

Table 2

potassium measurements					Mean (mM)	CV%	Reference
4.75	4.54	4.82	4.75	4.47	4.63	3.60	4.58
4.47	4.88	4.64	4.62	4.77			
4.45	4.94	4.51	4.59	4.53			
4.79	4.32	4.42	4.63	4.64			

[0092] Table 3 shows the response or sodium ion reproducibility measurements by a potentiometric sensor incorporating a sodium ion-selective working electrode and a reference electrode of the present invention that is a solid-state hydrogel membrane reference. Twenty (20) sodium sensors 30 similar to that illustrated in Figs. 2, 2A were used to measure a whole blood sample having a concentration of 143.5 mmol/L of sodium ion. As shown the mean of the 20 measurements was 144.8 mmol/L of sodium with a coefficient of variation of 1.7%.

Table 3

Sodium measurements					Mean (mM)	CV%	Reference
143.5	143.4	146.5	144.2	143.5	144.8	1.72	143.5
147.1	149.3	141.2	144.7	145.1			
149.7	143.5	146.7	142.6	142.8			
148.8	146.2	142.8	141.9	143.1			

[0093] Table 4 lists potassium measurement tests on 30 different whole blood samples. The reference values for each of the 30 different whole blood samples were measured using a Nova Biomedical Analyzer, Model Stat Profile Prime. It is important to note that no membrane conditioning was performed before measurement of the whole blood samples. The measurement difference is the difference in mmol/L between the value measured by the Nova Biomedical Analyzer and the value measured by the potassium ion-selective sensor incorporating the solid-state reference electrode of the present invention. The Percent Bias is determined by taking the absolute value of the difference between the millimole value of Nova result and the millimole value using the solid-state Reference result and dividing by the millimole value of the Nova result. For single charge ions such as sodium and potassium, one millivolt is equal to a four percent (4%) bias. As shown in the table, the measurement results taken with a potassium ion-selective sensor incorporating the solid-state reference of the present invention indicates that the average value of the Percent Bias for the 30 samples is three percent (3%) and the average millivolt value of that Percent Bias is 0.703 mv. It is interesting to note that for the 30 samples, the maximum value of the Percent Bias is 7% and the maximum value of the millivolt difference is 1.813 mv. This illustrates the accuracy and reliability of the disposable strip

sensor incorporating the solid-state reference electrode of the present invention when measuring potassium concentration in a whole blood sample.

Table 4 – Comparison Results for Potassium Whole Blood Measurements

Sample #	Nova results (mM)	Reference results (mM)	Percent Bias (absolute value)	Millivolt Difference
1	3.59	3.36	6%	1.602
2	5.32	5.36	1%	0.188
3	4.66	4.88	5%	1.180
4	4.51	4.67	4%	0.887
5	4.45	4.38	2%	0.393
6	4.61	4.43	4%	0.976
7	3.96	3.87	2%	0.568
8	5.54	5.61	1%	0.316
9	4.11	4.22	3%	0.669
10	5.61	5.47	2%	0.624
11	5.33	5.23	2%	0.469
12	4.91	5.04	3%	0.662
13	4.31	4.22	2%	0.522
14	5.02	4.89	3%	0.647
15	4.71	4.82	2%	0.584
16	5.03	5.11	2%	0.398
17	5.61	5.52	2%	0.401
18	4.55	4.44	2%	0.604
19	3.9	3.79	3%	0.705
20	5.41	5.26	3%	0.693
21	5.08	5.19	2%	0.541
22	5.56	5.38	3%	0.809
23	4.52	4.29	5%	1.272
24	4.38	4.33	1%	0.285
25	3.77	3.58	5%	1.260
26	5.42	5.62	4%	0.923
27	5.27	5.12	3%	0.712
28	3.31	3.55	7%	1.813
29	4.64	4.52	3%	0.647
30	5.32	5.23	2%	0.423
	Average Value		3%	0.703
	Maximum Value		7%	1.813

[0094] Table 5 lists sodium measurement tests on 30 different whole blood samples. The reference values for each of the 30 different whole blood samples

were measured using a Nova Biomedical Analyzer, Model Stat Profile Prime. The measurement difference is the difference in mmol/L between the value measured by the Nova Biomedical Analyzer and the value measured by the sodium ion-selective sensor incorporating the solid-state reference electrode of the present invention. As previously stated above, the Percent Bias is determined by taking the absolute value of the difference between the millimole value of Nova result and the millimole value using the solid-state Reference result and dividing by the millimole value of the Nova result. For single charge ions such as sodium and potassium, one millivolt is equal to a four percent (4%) bias. As shown in the table, the measurement results taken with a sodium ion-selective sensor 30 shown in Figs. 2-2A incorporating the solid-state reference of the present invention indicates that average value of the Percent Bias for the 30 samples is one percent (1%) and the average millivolt value of that Percent Bias is 0.008 mv. It is interesting to note that for the 30 samples, the maximum value of the Percent Bias is 2% and the maximum value of the millivolt difference is 0.481 mv. This illustrates the accuracy and reliability of the disposable strip sensor incorporating the solid-state reference electrode of the present invention when measuring sodium concentration in a whole blood sample.

Table 5 – Comparison Results for Sodium Whole Blood Measurements

Sample #	Nova results (mM)	Reference results (mM)	Percent Bias (absolute value)	Millivolt Difference
1	153.6	152.7	1%	0.146
2	137.4	138.6	1%	0.218
3	150.5	151.8	1%	0.216
4	147.3	145.8	1%	0.255
5	126.8	128.4	1%	0.315
6	144.5	142.8	1%	0.294
7	155.9	152.9	2%	0.481
8	147.6	147.2	0%	0.068
9	156.8	157.3	0%	0.080
10	149.1	148.9	0%	0.034
11	141.7	143.1	1%	0.247
12	144.1	142.7	1%	0.243
13	136	137.3	1%	0.239
14	137.3	136.9	0%	0.073
15	131.5	130.5	1%	0.190
16	158.8	159.1	0%	0.047

17	148.9	147.5	1%	0.235
18	140.6	140.9	0%	0.053
19	136.3	135.2	1%	0.202
20	143.8	141.7	1%	0.365
21	135.1	137.2	2%	0.389
22	140.4	138.7	1%	0.303
23	153	151.7	1%	0.212
24	136.8	138.1	1%	0.238
25	137.9	136.2	1%	0.308
26	146.2	145.4	1%	0.137
27	150.9	151.4	0%	0.083
28	133	132.6	0%	0.075
29	143.6	141.8	1%	0.313
30	135.1	134.2	1%	0.167
	Average Value		1%	0.008
	Maximum Value		2%	0.481

[0095] Table 6 lists calcium measurement tests on 30 different whole blood samples. The reference values for each of the 30 different whole blood samples were measured using a Nova Biomedical Analyzer, Model Stat Profile Prime. The measurement difference is the difference in mmol/L between the value measured by the Nova Biomedical Analyzer and the value measured by the calcium ion-selective sensor incorporating the solid-state reference electrode of the present invention. As previously stated above, the Percent Bias is determined by taking the absolute value of the difference between the millimole value of Nova result and the millimole value using the solid-state Reference result and dividing by the millimole value of the Nova result. For double charge ions such as calcium, one millivolt is equal to an eight percent (8%) bias. As shown in the table, the measurement results taken with a calcium ion-selective sensor 30 shown in Figs. 2-2A incorporating the solid-state reference of the present invention indicates that average value of the Percent Bias for the 30 samples is five percent (5%) and the average millivolt value of that Percent Bias is 0.668 mv. It is interesting to note that for the 30 samples, the maximum value of the Percent Bias is 11% and the maximum value of the millivolt difference is 1.389 mv. This illustrates the accuracy and reliability of the disposable strip sensor incorporating the solid-state reference electrode of the present invention when measuring calcium concentration in a whole blood sample.

Table 6 – Comparison Results for Calcium Whole Blood Measurements

Sample #	Nova results (mM)	Reference results (mM)	Percent Bias (absolute value)	Millivolt Difference
1	1.15	1.09	5%	0.652
2	1.45	1.51	4%	0.517
3	1.47	1.42	3%	0.425
4	1.18	1.21	3%	0.318
5	1.2	1.15	4%	0.521
6	1.08	1.01	6%	0.810
7	1.28	1.16	9%	1.172
8	1.26	1.12	11%	1.389
9	1.24	1.32	6%	0.806
10	1.2	1.28	7%	0.833
11	1.26	1.31	4%	0.496
12	1.17	1.22	4%	0.534
13	1.19	1.11	7%	0.840
14	1.18	1.1	7%	0.847
15	1.31	1.23	6%	0.763
16	1.19	1.14	4%	0.525
17	1.27	1.21	5%	0.591
18	1.44	1.47	2%	0.260
19	1.21	1.11	8%	1.033
20	1.24	1.31	6%	0.706
21	1.01	1.04	3%	0.371
22	1.36	1.29	5%	0.643
23	1.32	1.41	7%	0.852
24	1.12	1.18	5%	0.670
25	1.25	1.22	2%	0.300
26	1.35	1.41	4%	0.556
27	1.49	1.52	2%	0.252
28	1.25	1.32	6%	0.700
29	1.36	1.25	8%	1.011
30	1.18	1.12	5%	0.636
	Average Value		5%	0.668
	Maximum Value		11%	1.389

[0096] Tables 7-11 lists sodium measurement tests in ten (10) whole blood samples showing the effect of various storage scenarios on sodium sensors incorporating the solid-state reference of the present invention. The reference values for each of the 10 different whole blood samples were measured using a

Nova Biomedical Analyzer, Model Stat Profile Prime. The solid-state reference was used directly from storage without any conditioning (i.e. hydrating) of the solid-state reference before use. The measurement difference is the difference in mmol/L between the value measured by the Nova Biomedical Analyzer and the value measured by the sodium ion-selective sensor incorporating the solid-state reference electrode of the present invention. As previously stated above, the Percent Bias is determined by taking the absolute value of the difference between the millimole value of Nova result and the millimole value using the solid-state Reference result and dividing by the millimole value of the Nova result. For single charge ions such as sodium and potassium, one millivolt is equal to a four percent (4%) bias. The results include data of newly-made sensors (Table 7), sensors stored for 6 months at room temperature (Table 8), sensors stored for 6 months at 4 °C (Table 9), sensors stored for 1 year at room temperature (Table 10), and sensors stored for 1 year at 4 °C (Table 11). As shown in the tables, the measurement results taken with a sodium ion-selective sensor 30 shown in Figs. 2-2A incorporating the solid-state reference of the present invention indicates that the average millivolt value representative of the Percent Bias is less than 0.1 mv.

Table 7 – Comparison of Newly-made Solid-State Reference Electrode

Samples #	Reference values (mM)	Newly-made sensors (mM)	Percent Bias (absolute value)	Millivolt Difference
1	144	142	1.39%	0.056
2	137	137	0.00%	0.000
3	140	141	0.71%	0.029
4	134	133	0.75%	0.030
5	149	150	0.67%	0.027
6	147	145	1.36%	0.054
7	146	143	2.05%	0.082
8	132	131	0.76%	0.030
9	152	149	1.97%	0.079
10	141	140	0.71%	0.028
	Average Value		1.04%	0.042
	Maximum Value		2.05%	0.082

Table 8 – Comparison of Concentration Reference Value when Solid-State Reference Electrode is Stored for 6 Months at Room Temperature

Samples #	Reference values (mM)	Sensors - Half year storage at room temperature (mM)	Percent Bias (absolute value)	Millivolt Difference
1	144	144	0.00%	0.000
2	137	136	0.73%	0.029
3	140	138	1.43%	0.057
4	134	135	0.75%	0.030
5	149	147	1.34%	0.054
6	147	146	0.68%	0.027
7	146	144	1.37%	0.055
8	132	134	1.52%	0.061
9	152	151	0.66%	0.026
10	141	143	1.42%	0.057
	Average Value		0.99%	0.040
	Maximum Value		1.52%	0.061

Table 9 – Comparison of Concentration Reference Value when Solid-State Reference Electrode is Stored for 6 Months at 4 °C Temperature

Samples #	Reference values (mM)	Sensors - Half year storage at 4 °C temperature (mM)	Percent Bias (absolute value)	Millivolt Difference
1	144	142	1.39%	0.056
2	137	138	0.73%	0.029
3	140	138	1.43%	0.057
4	134	134	0.00%	0.000
5	149	148	0.67%	0.027
6	147	146	0.68%	0.027
7	146	145	0.68%	0.027
8	132	133	0.76%	0.030
9	152	152	0.00%	0.000
10	141	141	0.00%	0.000
	Average Value		0.63%	0.025
	Maximum Value		1.43%	0.057

Table 10 – Comparison of Concentration Reference Value when Solid-State Reference Electrode is Stored for 1 year at Room Temperature

Samples #	Reference values (mM)	Sensors - one year storage at room temperature (mM)	Percent Bias (absolute value)	Millivolt Difference
1	144	141	2.08%	0.083
2	137	136	0.73%	0.029
3	140	142	1.43%	0.057
4	134	132	1.49%	0.060
5	149	151	1.34%	0.054
6	147	148	0.68%	0.027
7	146	145	0.68%	0.027
8	132	131	0.76%	0.030
9	152	153	0.66%	0.026
10	141	142	0.71%	0.028
	Average Value		1.06%	0.042
	Maximum Value		2.08%	0.083

Table 11 – Comparison of Concentration Reference Value when Solid-State Reference Electrode is Stored for 1 year at 4 °C Temperature

Samples #	Reference values (mM)	Sensor - one year storage at 4 °C temperature (mM)	Percent Bias (absolute value)	Millivolt Difference
1	144	145	0.69%	0.028
2	137	136	0.73%	0.029
3	140	140	0.00%	0.000
4	134	133	0.75%	0.030
5	149	150	0.67%	0.027
6	147	146	0.68%	0.027
7	146	144	1.37%	0.055
8	132	133	0.76%	0.030
9	152	154	1.32%	0.053
10	141	142	0.71%	0.028
	Average Value		0.77%	0.031
	Maximum Value		1.37%	0.055

[0097] Although the preferred embodiments of the present invention have been described herein, the above description is merely illustrative. Further modification

of the invention herein disclosed will occur to those skilled in the respective arts and all such modifications are deemed to be within the scope of the invention as defined by the appended claims.

What is claimed is:

1. A solid-state reference electrode (11) for use in whole blood, serum, plasma, other biological fluids, and/or aqueous solutions, the solid-state reference electrode (11) comprising:
   an insulating support substrate (12);
   an electrically-conductive material (14) disposed on the insulating support substrate (12) wherein a first portion of the electrically-conductive material is an electrode portion (14a) and a second portion of the electrically-conductive material is an electrical contact portion (14b), the electrically-conducting material (14) comprising one of a conductive noble metal, an electrically conductive ink, or a metal-metal salt selected from the group consisting of silver-silver chloride and mercury-mercurous chloride;
   an electrode-forming insulating layer (16) having an opening, the electrode-forming insulating layer (16) disposed on the insulating substrate layer (12) wherein the opening forms a well (16b) having predefined dimensions and exposing the electrode portion (14a) of the electrically-conductive material;
   a metal-metal salt layer (18) disposed in the well (16b) over the electrode portion (14a) of the electrically-conductive material (14) when the electrically-conductive material (14) is not the metal-metal salt; and
   a hydrogel polymeric membrane (20) disposed (a) on the metal-metal salt layer (18) forming the solid-state reference electrode (11) when the electrically-conductive material (14) is not the metal-metal salt, or (b) directly on the electrically-conductive material (14) when the electrically-conductive material (14) is the metal-metal salt, the hydrogel polymeric membrane (20) being a polymeric hydrogel network containing (i) a chloride salt from inorganic salts of chlorides or organic salts of chlorides and (ii) a supporting electrolyte from salts of an anionic species.

2. The solid-state reference electrode (11) as claimed in claim 1 further comprising a second polymeric membrane (22) disposed onto the hydrogel

polymeric membrane, the second polymeric membrane selected from hydrophilic silicon compounds or from lipophilic polymers.

3. The solid-state reference electrode (11) as claimed in claim 1 wherein the conductive noble metal is selected from the group consisting of gold, platinum, palladium, copper, indium, and tin oxide.

4. The solid-state reference electrode (11) as claimed in claim 1 where the chloride salt in the hydrogel polymeric membrane is selected from the group consisting of sodium chloride, potassium chloride, lithium chloride, choline chloride, 1-butyl-3-methylimidazolium chloride, 1-butyl-2,3-dimethylimidazolium chloride, 1-butyl-1-methylpyrrolidium chloride, 1,2-dimethyl-3-propylimidazolium chloride, and 1,3-dimethylimidazolium chloride.

5. The solid-state reference electrode (11) as claimed in claim 1 wherein the supporting electrolyte is selected from the group consisting of lithium, sodium or potassium salts of citrates, acetates, sulfonates or triflates.

6. The solid-state reference electrode (11) as claimed in claim 2 wherein the silicone compounds are selected from the group consisting of diluted silicon tetrachloride, aminopropyltriethoxysilane, n-[3-(trimethoxysilyl)propyl]ethylenediamine, methyltrimethoxy silane and phenyltrimethoxysilane.

7. The solid-state reference electrode (11) as claimed in claim 2 wherein the lipophilic polymers are selected from the group consisting of polyvinylpyrrolidone, polyvinyl alcohol, PVC, poly(methyl methacrylate), agar, gelatin, poly(urethane), cellulose acetate butyrate, cellulose acetate, and nitro cellulose.

8. The solid-state reference electrode (11) as claimed in claim 2 wherein the metal-metal salt layer (18) is silver-silver chloride, the chloride salt in the hydrogel polymeric membrane is potassium chloride, and the supporting electrolyte is lithium acetate.

9. The solid-state reference electrode (11) as claimed in claim 1 wherein the hydrogel polymeric membrane (20) is selected from the group consisting of polyacrylates, polymethacrylates, polyvinyl compounds, polyurethanes,

polycarbamoyl sulfonates, polyureas, polyethers, crosslinkable PVA-SBQ, crosslinked protein matrix like gelatin, silk fibroin, BSA, crosslinked polysacharrides like cellulose, dextrans, cyclodextrans, alginates, chitosan, Agar, and any combination of thereof.

10. The solid-state reference electrode (11) as claimed in claim 1 wherein the hydrogel polymeric membrane (20) further includes (a) a hydrophilic plasticizer capable of filing the polymeric hydrogel network and solidifying and plasticizing the hydrogel polymeric membrane (20), and (b) a high molecular weight polymer capable of reinforcing the polymeric hydrogel network.

11. The solid-state reference electrode (11) as claimed in claim 10 wherein the hydrophilic plasticizer is selected from at least one of glycerol, polyethylene glycol, ethylene glycol monomethyl ester, ethylene glycol, formamide.

12. The solid-state reference electrode (11) as claimed in claim 10 wherein the high molecular weight polymer is one of polyethylene glycol, polyvinyl alcohol, polyvinylpyrrolidone, poly(2-hydroxyethyl methacrylate), and particulates like pyrogenic silica or latex.

13. The solid-state reference electrode (11) as claimed in claim 1 wherein the hydrogel polymeric membrane includes poly-2-hydroxyethyl methacrylate, ethylene glycol as the hydrophilic plasticizer, and polyvinylpyrrolidone as the high molecular weight polymer.

14. A method of making a solid-state reference electrode (11) for use in whole blood, serum, plasma, other biological fluids, and/or aqueous solutions, the method comprising:

obtaining either (a) an insulating support substrate (12) having an electrically-conductive material (14) disposed on at least one side of the insulating support substrate (12), or (b) an insulating support substrate (12) and disposing an electrically-conductive material (14) onto at least one side of the insulating support substrate (12) wherein a first portion of the electrically-conductive material is an electrode portion (14a) and a second portion of the electrically-conductive material is an electrical contact portion (14b), the electrically-conducting material (14) in (a) and (b) comprising one of a conductive noble metal, an electrically

conductive ink, or a metal-metal salt selected from the group consisting of silver-silver chloride and mercury-mercurous chloride;

disposing an electrode-forming insulating layer (16) having an opening onto the insulating support substrate, the opening forming a well (16b), wherein the well (16b) exposes the electrode portion (14a) of the electrically-conductive material (14);

forming a metal-metal salt layer (18) on the electrode portion (14a) of the electrically-conductive material (14) exposed in the well (16b) when the electrically-conductive material (14) is not the metal-metal salt;

disposing a predefined amount of a precursor solution into the well (16b), the precursor solution containing a chloride salt solution, a supporting electrolyte solution, a hydrogel polymer, a hydrophilic plasticizer, a high molecular weight polymer, a cross-linking reagent, and a radical initiator; and

exposing the precursor solution in the well (16b) to radiation forming a hydrogel polymeric membrane (20) and thereby forming the solid-state reference electrode (11).

15. The method of claim 14 wherein the forming step includes forming a silver-silver chloride layer.

16. The method of claim 14 further includes forming the precursor solution by mixing a predefined amount of a chloride salt solution, a predefined amount of a supporting electrolyte solution, a predefined amount of hydroxyethyl methacrylate, a predefined amount of ethylene glycol, a predefined amount of polyvinylpyrrolidone, a predefined amount of tetraehtylene glycol dimethacrylate and a predefined amount of 2,2-dimethoxy-2-phenylacetophenone.

17. The method of claim 14 further includes forming the precursor solution by mixing an amount in a range selected from the group consisting of 20-80 wt.%, 30-70 wt.% and 45-55 wt.% of poly-2-hydroxyethyl methacrylate as the cross-linkable hydrogel polymer, an amount in a range selected from the group consisting of 20-80 wt.%, 30-60 wt.% and 40-50 wt.% of ethylene glycol as the hydrophilic plasticizer, an amount in a range selected from the group

consisting of 0.5-10.0 wt.% and 1-5 wt.% of polyvinylpyrrolidone as the high molecular weight polymer, an amount in a range selected from the group consisting of of 0.1-2.0 wt.% and 0.5-1.0 wt.% of tetraethylene glycol dimethacrylate as the cross-linking reagent, and an amount in the range selected from the group consisting of 0.01-2.0 wt.% and 0.5-1.0 wt.% of 2,2-dimethoxy-2-phenylacetophenone as the radical initiator.

18. A method of making the hydrogel polymeric membrane (20) of claim 1 for use in a solid-state reference electrode (11), the method comprising:
    forming a precursor solution comprising:
        a predefined amount of a chloride salt;
        a predefined amount of a supporting electrolyte salt;
        a predefined amount of cross-linkable hydrogel polymer;
        a predefined amount of hydrophilic plasticizer;
        a predefined amount of high molecular weight polymer;
        a predefined amount of a cross-linking reagent; and
        a predefined amount of a radical initiator;
    disposing a predefined amount of the precursor solution onto a solid-state electrode containing a metal-metal salt electrolytic electrode; and
    photo-irradiating the predefined amount of the precursor solution to ultraviolet light.

19. The method of claim 18 further comprising:
    selecting potassium chloride as the chloride salt;
    selecting lithium acetate as the supporting electrolyte salt;
    selecting poly-2-hydroxyethyl methacrylate as the cross-linkable hydrogel polymer;
    selecting ethylene glycol as the hydrophilic plasticizer;
    selecting polyvinylpyrrolidone as the high molecular weight polymer;
    selecting tetraethylene glycol dimethacrylate as the cross-linking reagent; and
    selecting 2,2-dimethoxy-2-phenylacetophenone as the radical initiator.

20. The method of claim 18 further comprising:

selecting an amount in a range from the group consisting of 0.1 mM to saturated, 10mM to 500 mM and a concentration of 200 mM of the chloride salt;

selecting an amount in a range from the group consisting of 10 mM to saturated, 1M to 6 M and 3 M to 5M of the supporting electrolyte salt;

selecting an amount in a range from the group consisting of 20-80 wt.%, 30-70 wt.% and 45-55 wt.% of poly-2-hydroxyethyl methacrylate as the cross-linkable hydrogel polymer;

selecting an amount in a range from the group consisting of 20-80 wt.%, 30-60 wt.% and 40-50 wt.% of ethylene glycol as the hydrophilic plasticizer;

selecting an amount in a range from the group consisting of 0.5-10.0 wt.% and 1-5 wt.% of polyvinylpyrrolidone as the high molecular weight polymer;

selecting an amount in a range from the group consisting of 0.1-2.0 wt.% and 0.5-1.0 wt.% of tetraethylene glycol dimethacrylate as the cross-linking reagent; and

selecting an amount in the range from the group consisting of 0.01-2.0 wt.% and 0.5-1.0 wt.% of 2,2-dimethoxy-2-phenylacetophenone as the radical initiator.

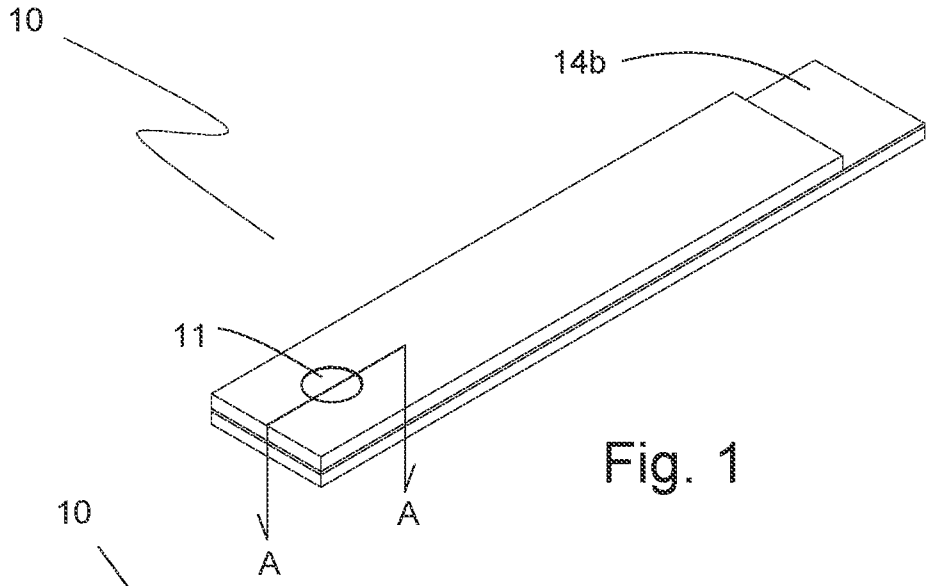

Fig. 1

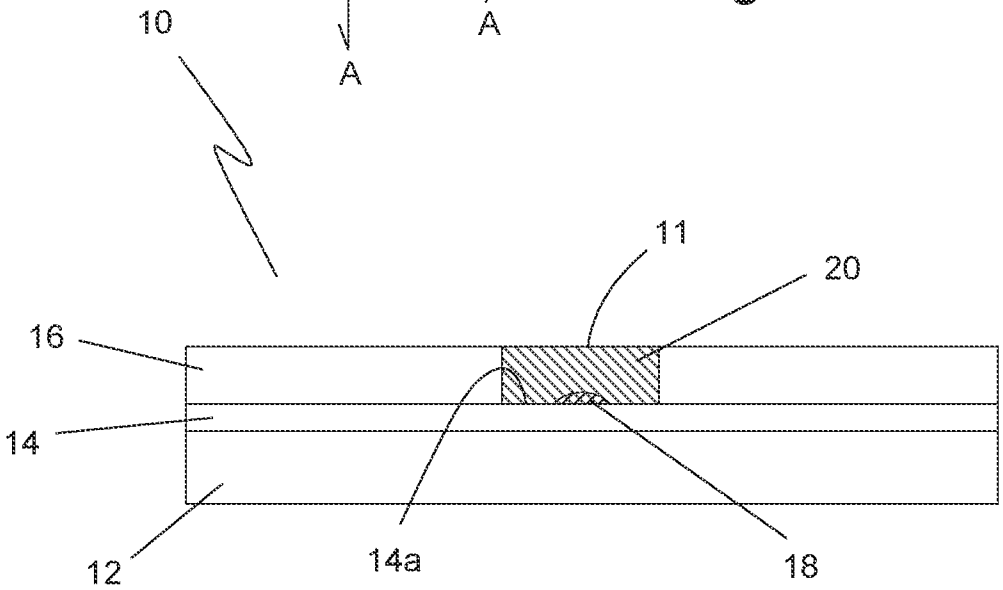

Fig. 1A

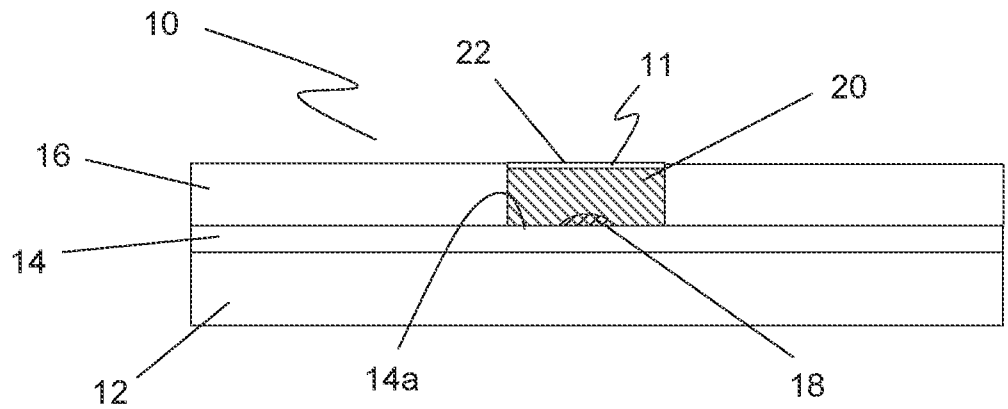

Fig. 1B

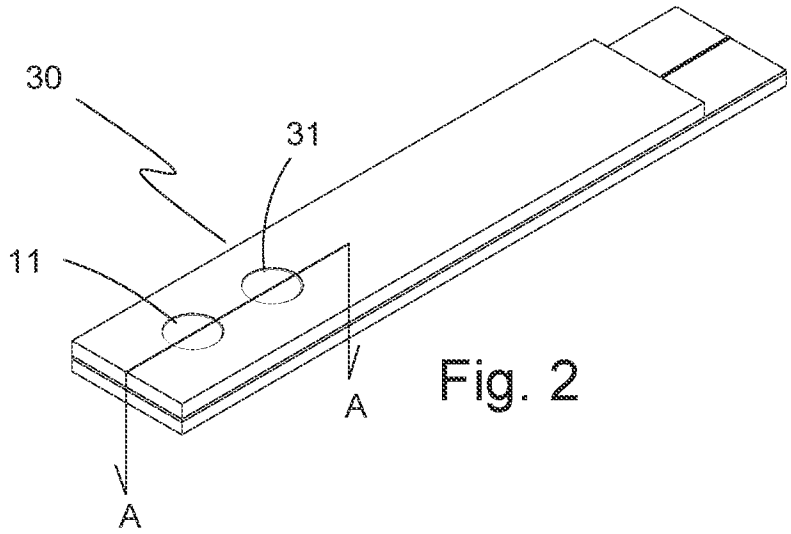

Fig. 2

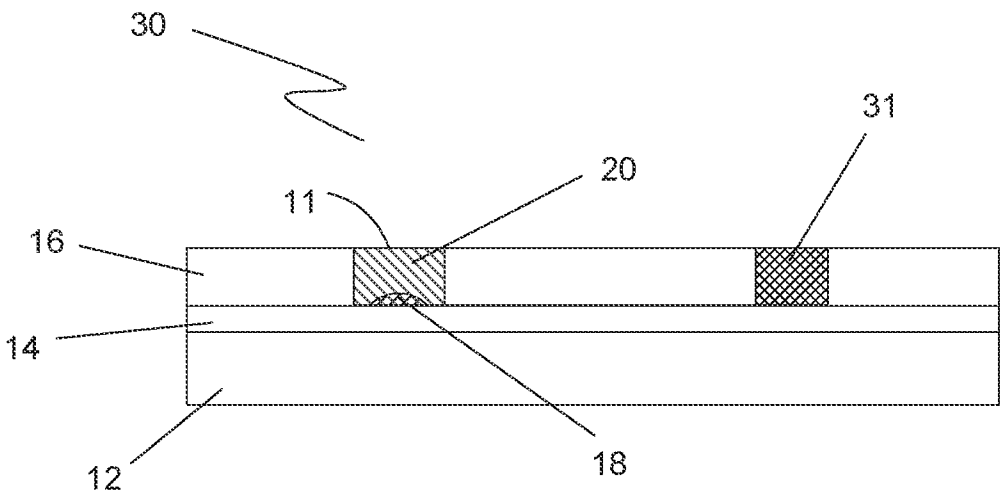

Fig. 2A

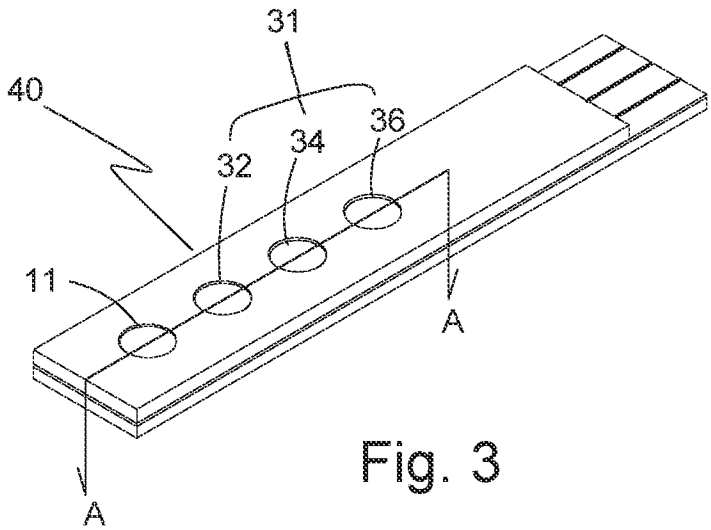

Fig. 3

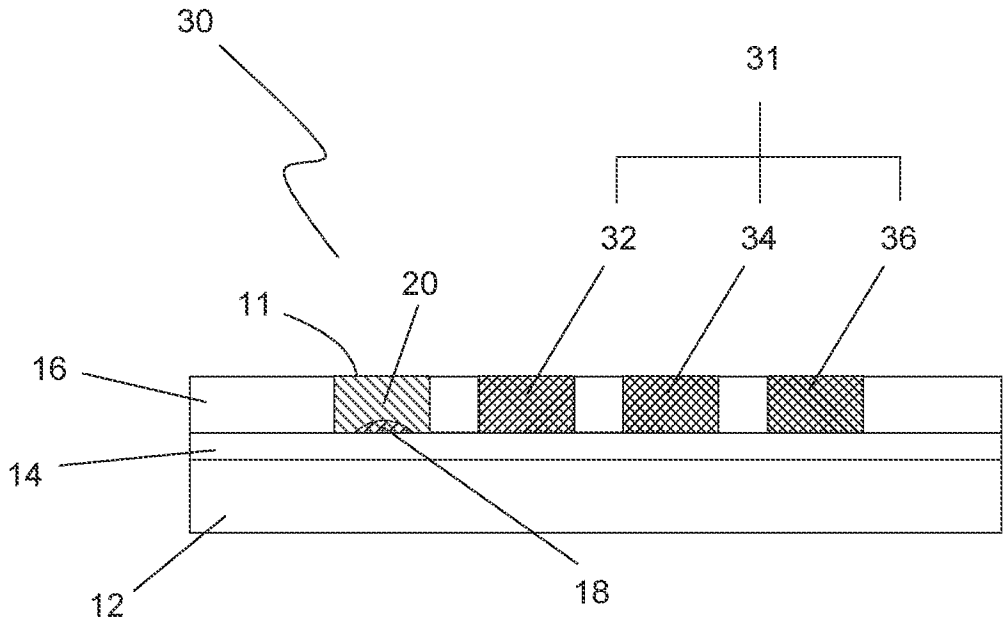

Fig. 3A

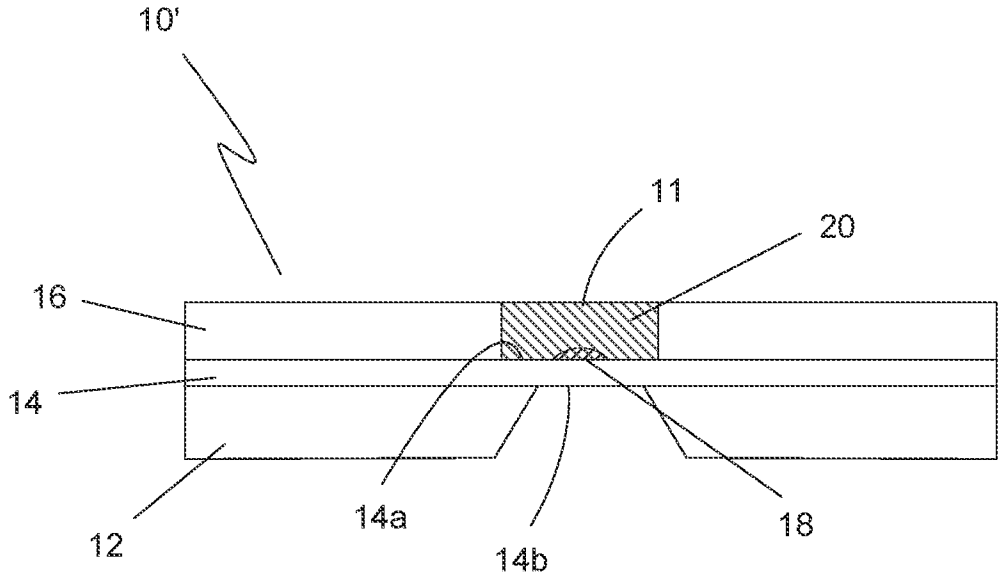

Fig. 4

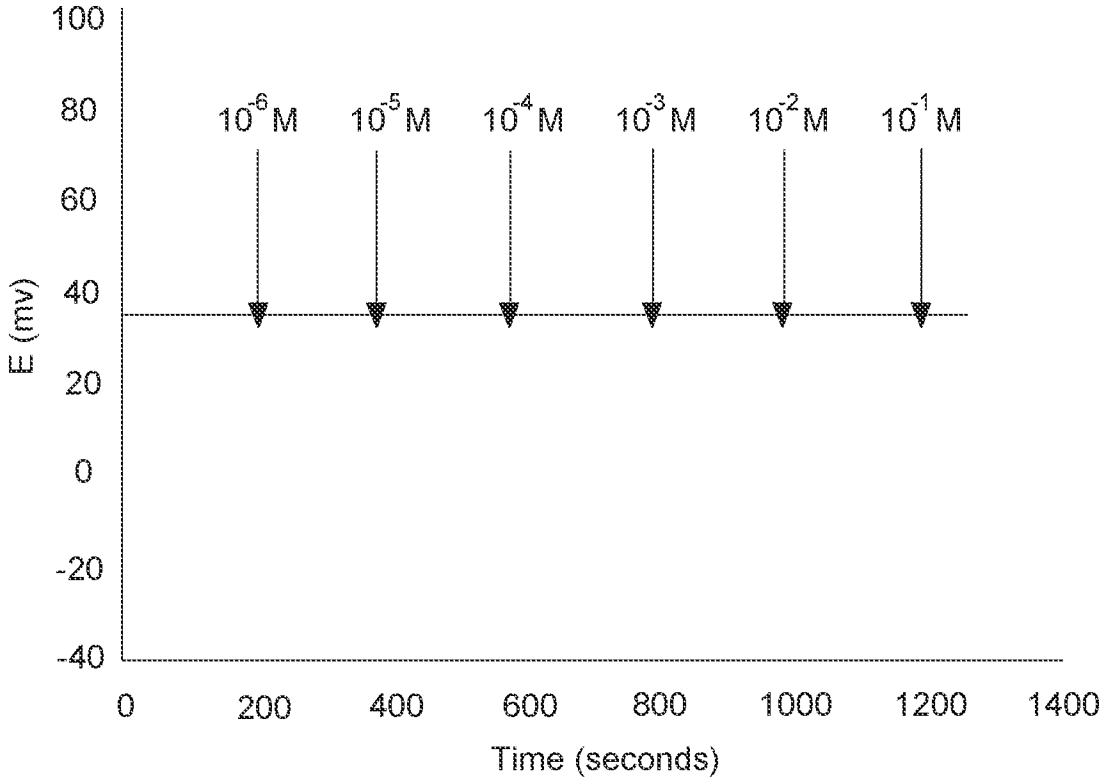
100
80
60
40
20
0
-20
-40
E (mv)
10-6 M
10-5 M
10-4 M
10-3 M
10-2 M
10-1 M
0
200
400
600
800
1000
1200
1400
Time (seconds)

Fig. 5

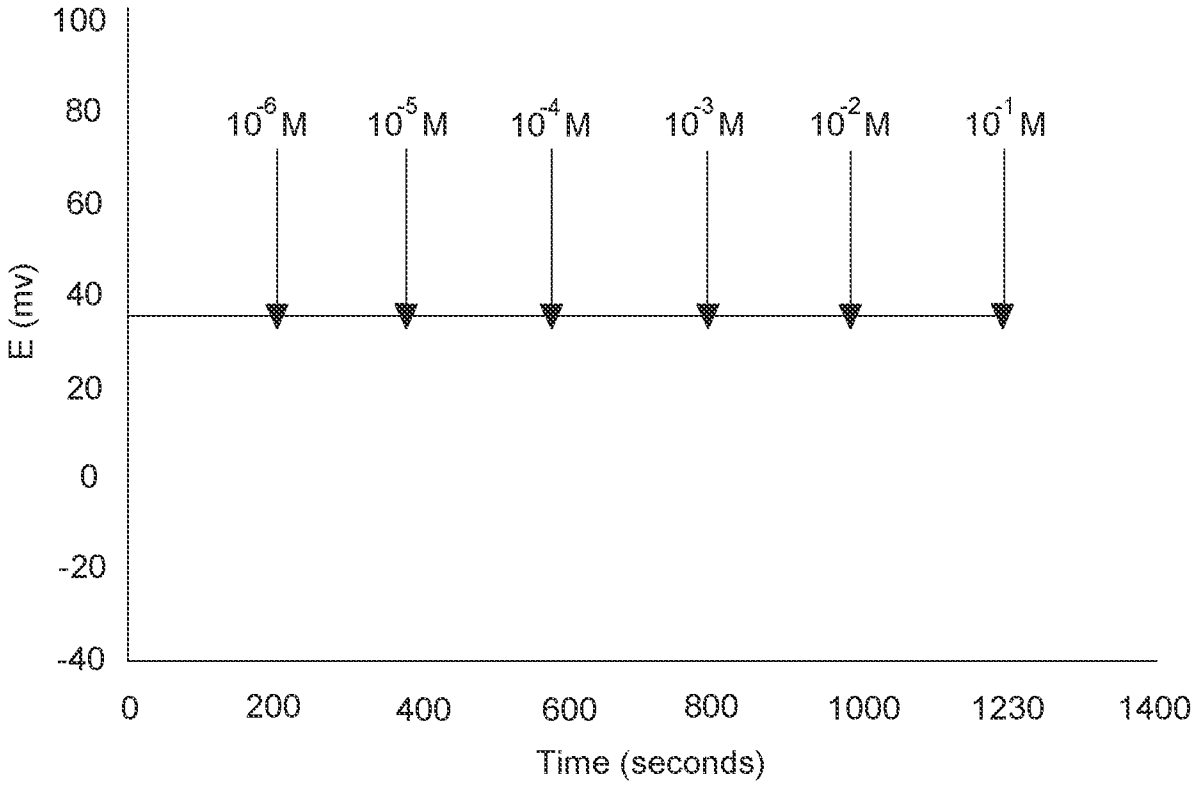
100
80
60
40
20
0
-20
-40
E (mv)
10-6 M
10-5 M
10-4 M
10-3 M
10-2 M
10-1 M
0
200
400
600
800
1000
1230
1400
Time (seconds)

Fig. 6

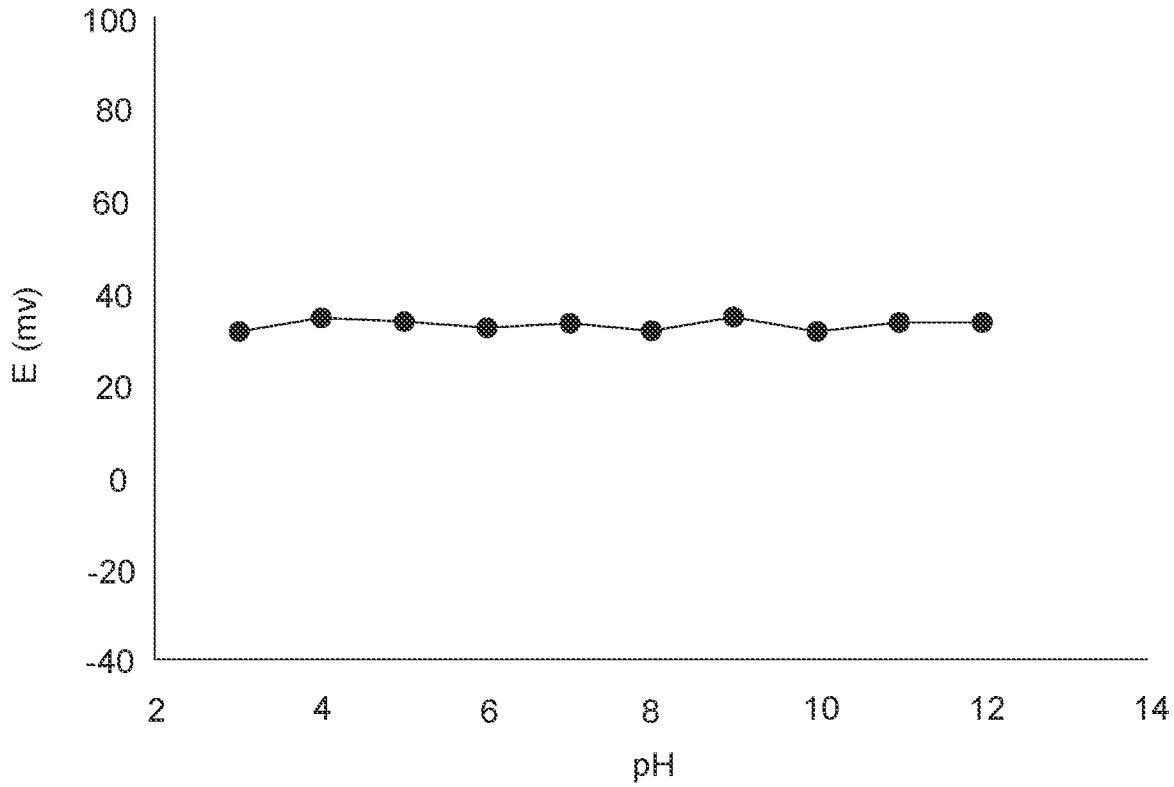

Fig. 7

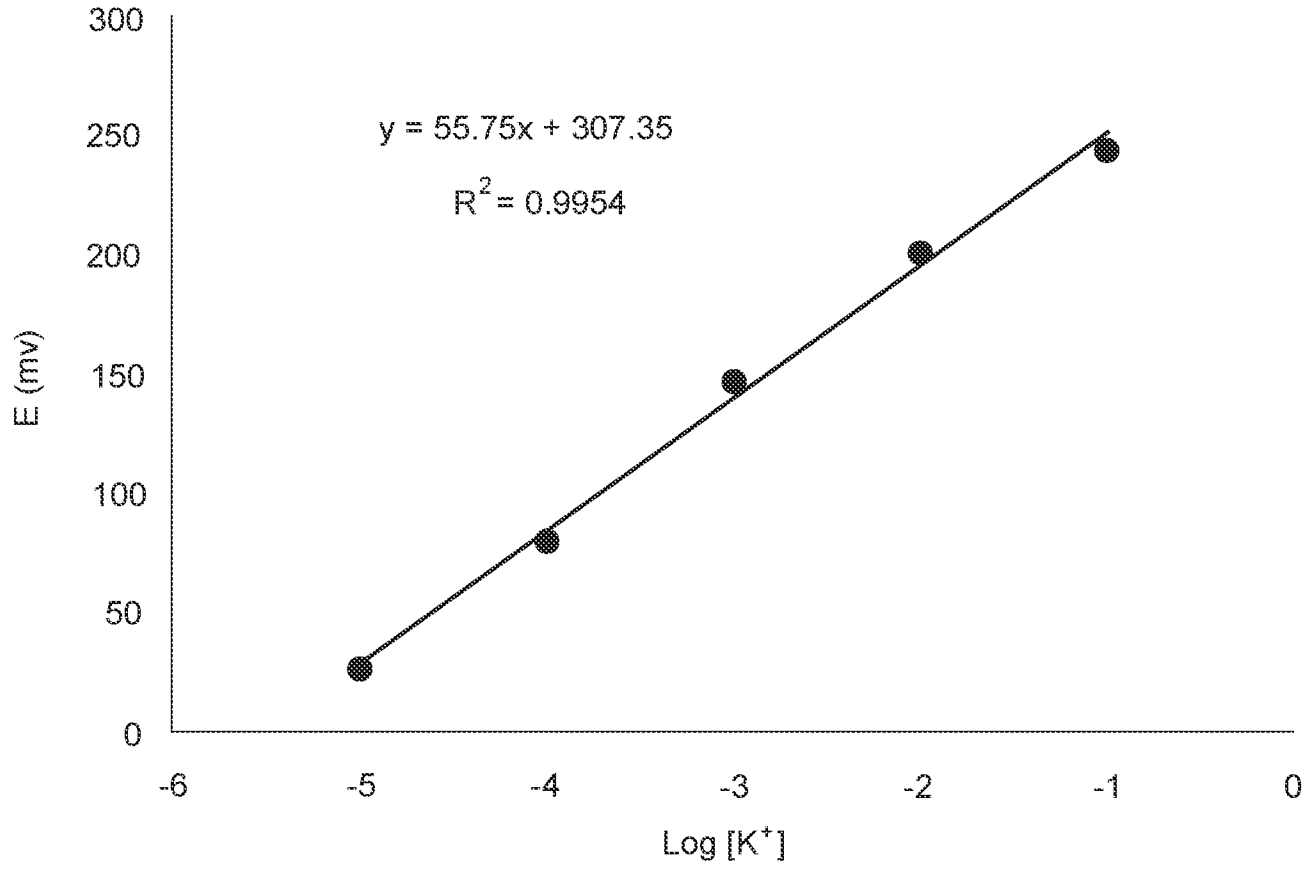
300
250
200
150
100
50
0
E (mv)
y = 55.75x + 307.35
R2 = 0.9954
-6
-5
-4
-3
-2
-1
0
Log [K+]

Fig. 8

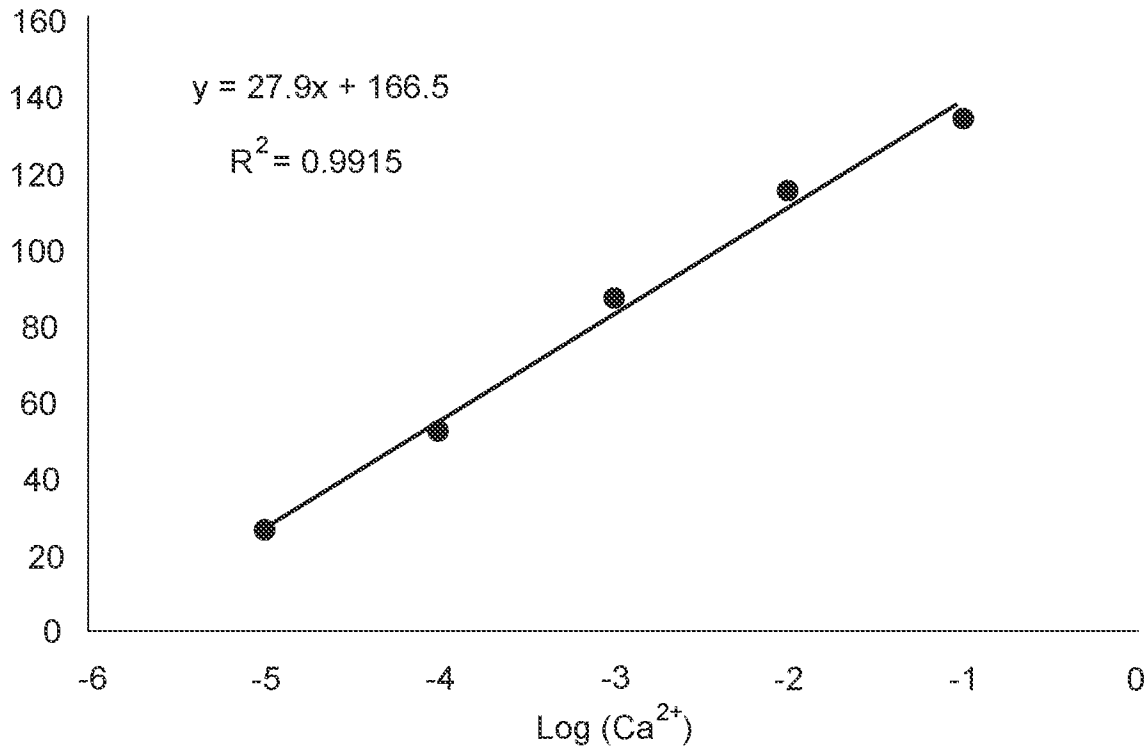
160
140
120
100
80
60
40
20
0
y = 27.9x + 166.5
R2 = 0.9915
-6
-5
-4
-3
-2
-1
0
Log (Ca2+)

Fig. 9

INTERNATIONAL SEARCH REPORT

International application No.
PCT/US2021/033120

A. CLASSIFICATION OF SUBJECT MATTER

G01N 27/30(2006.01)i; **G01N 27/327**(2006.01)i; **G01N 27/403**(2006.01)i

According to International Patent Classification (IPC) or to both national classification and IPC

B. FIELDS SEARCHED

Minimum documentation searched (classification system followed by classification symbols)

G01N 27/30(2006.01); G01N 27/26(2006.01); G01N 27/333(2006.01); G01N 27/413(2006.01); H01R 43/00(2006.01)

Documentation searched other than minimum documentation to the extent that such documents are included in the fields searched

Korean utility models and applications for utility models
Japanese utility models and applications for utility models

Electronic data base consulted during the international search (name of data base and, where practicable, search terms used)

eKOMPASS(KIPO internal) & Keywords: reference electrode, substrate, insulating layer, metal-metal salt layer, membrane

C. DOCUMENTS CONSIDERED TO BE RELEVANT

Category*	Citation of document, with indication, where appropriate, of the relevant passages	Relevant to claim No.
X	US 2011-0056831 A1 (KENDIG et al.) 10 March 2011 (2011-03-10) paragraphs [0017]-[0027], claims 1, 10, 13, and figure 1	1-20
X	KR 10-2000-0061275 A (INFOFIA CO., LTD.) 16 October 2000 (2000-10-16) paragraphs [0011]-[0019], claim 2, and figures 1-3	1
A	EP 0394990 A2 (KYOTO DAIICHI KAGAKU CO., LTD.) 31 October 1990 (1990-10-31) page 4, lines 11-50 and figure 1	1-20
A	US 2005-0191429 A1 (BUCK, MICHAEL D.) 01 September 2005 (2005-09-01) paragraphs [0022]-[0026] and figures 1-3	1-20
A	US 7438796 B2 (SALZER, COREY A.) 21 October 2008 (2008-10-21) colulmn 5, lines 4-48 and figures 1A, 1B	1-20

☐ Further documents are listed in the continuation of Box C. ☑ See patent family annex.

* Special categories of cited documents:
"A" document defining the general state of the art which is not considered to be of particular relevance
"D" document cited by the applicant in the international application
"E" earlier application or patent but published on or after the international filing date
"L" document which may throw doubts on priority claim(s) or which is cited to establish the publication date of another citation or other special reason (as specified)
"O" document referring to an oral disclosure, use, exhibition or other means
"P" document published prior to the international filing date but later than the priority date claimed
"T" later document published after the international filing date or priority date and not in conflict with the application but cited to understand the principle or theory underlying the invention
"X" document of particular relevance; the claimed invention cannot be considered novel or cannot be considered to involve an inventive step when the document is taken alone
"Y" document of particular relevance; the claimed invention cannot be considered to involve an inventive step when the document is combined with one or more other such documents, such combination being obvious to a person skilled in the art
"&" document member of the same patent family

Date of the actual completion of the international search	Date of mailing of the international search report
14 February 2022	**15 February 2022**

Name and mailing address of the ISA/KR	Authorized officer
Korean Intellectual Property Office **189 Cheongsa-ro, Seo-gu, Daejeon** **35208, Republic of Korea**	**BAHNG, SEUNG HOON**
Facsimile No. **+82-42-481-8578**	Telephone No. **+82-42-481-5560**

INTERNATIONAL SEARCH REPORT
Information on patent family members

International application No.
PCT/US2021/033120

Patent document cited in search report	Publication date (day/month/year)	Patent family member(s)	Publication date (day/month/year)
US 2011-0056831 A1	10 March 2011	US 8211283 B2	03 July 2012
KR 10-2000-0061275 A	16 October 2000	CN 1170154 C	06 October 2004
		CN 1357105 A	03 July 2002
		DE 60022177 T2	08 June 2006
		EP 1171765 A1	16 January 2002
		EP 1171765 B1	24 August 2005
		JP 2002-540424 A	26 November 2002
		JP 3667639 B2	06 July 2005
		US 6554982 B1	29 April 2003
		WO 00-58720 A1	05 October 2000
EP 0394990 A2	31 October 1990	DE 69031436 T2	02 April 1998
		EP 0394990 A3	13 February 1991
		EP 0394990 B1	17 September 1997
		JP 02-287146 A	27 November 1990
		JP 2899306 B2	02 June 1999
US 2005-0191429 A1	01 September 2005	CA 2558270 A1	15 September 2005
		CA 2558275 A1	15 September 2005
		EP 1751528 A1	14 February 2007
		EP 1751531 A1	14 February 2007
		US 2005-0191428 A1	01 September 2005
		US 7658826 B2	09 February 2010
		WO 2005-085826 A1	15 September 2005
		WO 2005-085827 A1	15 September 2005
US 7438796 B2	21 October 2008	US 2008-0047846 A1	28 February 2008
		WO 2008-027741 A2	06 March 2008
		WO 2008-027741 A3	30 October 2008