G. H. NORTH.

SILVERWARE CLEANING AND WASHING MACHINE.

APPLICATION FILED MAY 17, 1920.

1,376,379.

Patented Apr. 26, 1921.

2 SHEETS—SHEET 1.

Fig. 1.

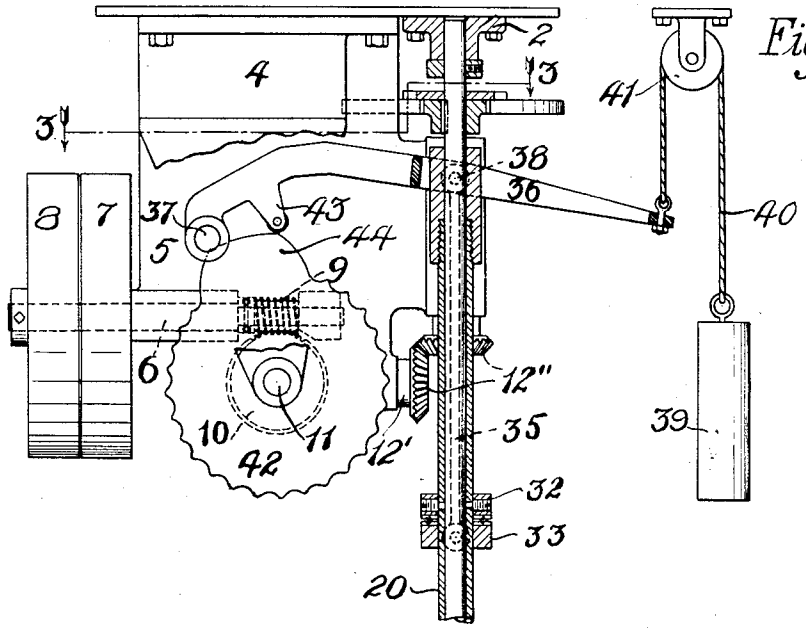

Fig. 2.

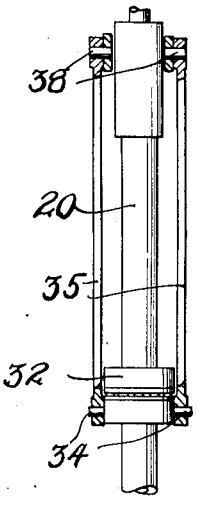

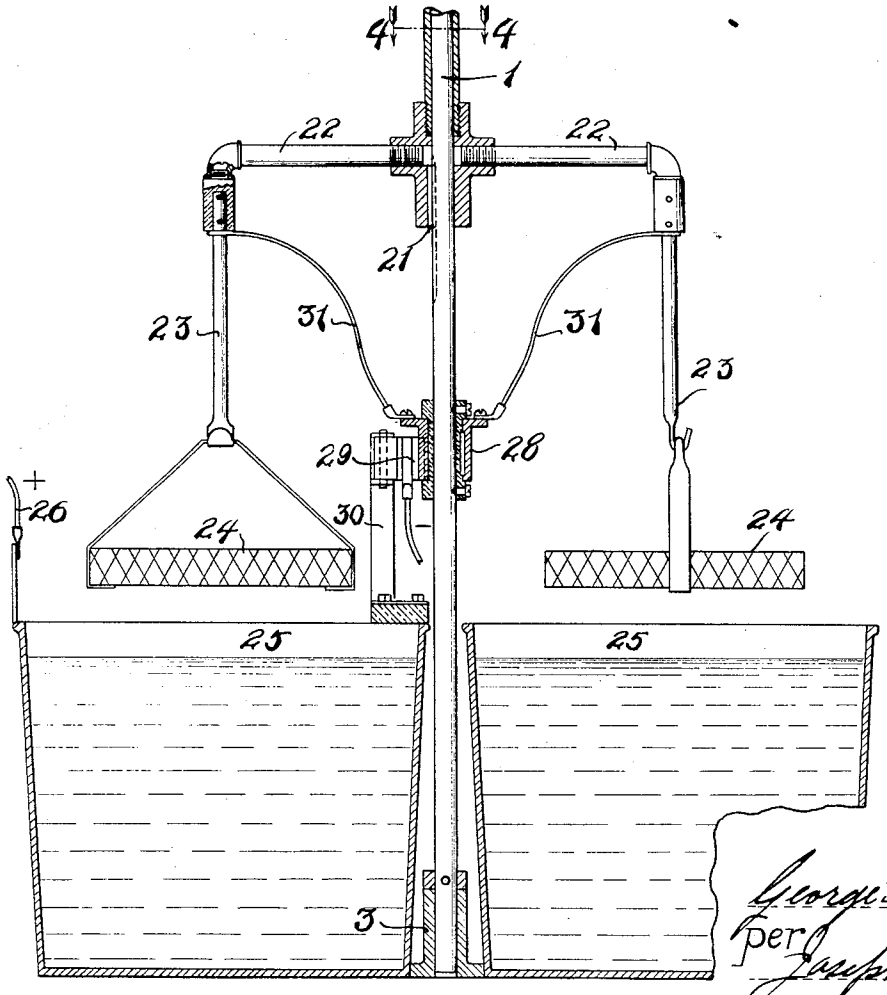

Inventor.
George H. North.
per Joseph A. Miller
Attorney.

G. H. NORTH.

SILVERWARE CLEANING AND WASHING MACHINE.

APPLICATION FILED MAY 17, 1920.

1,376,379. Patented Apr. 26, 1921.

2 SHEETS—SHEET 2.

Fig. 3.

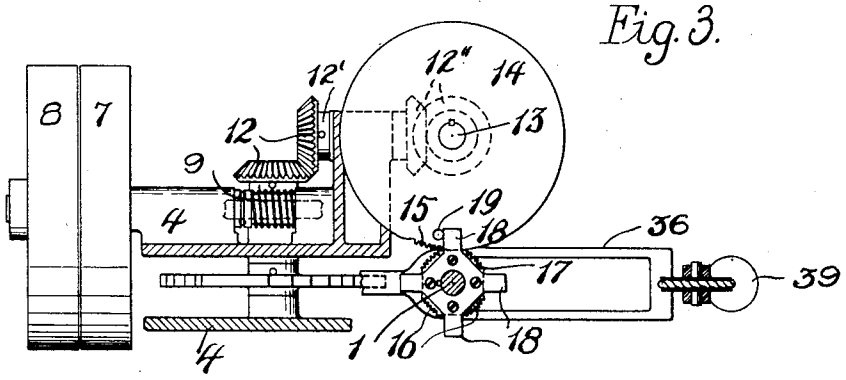

Fig. 4.

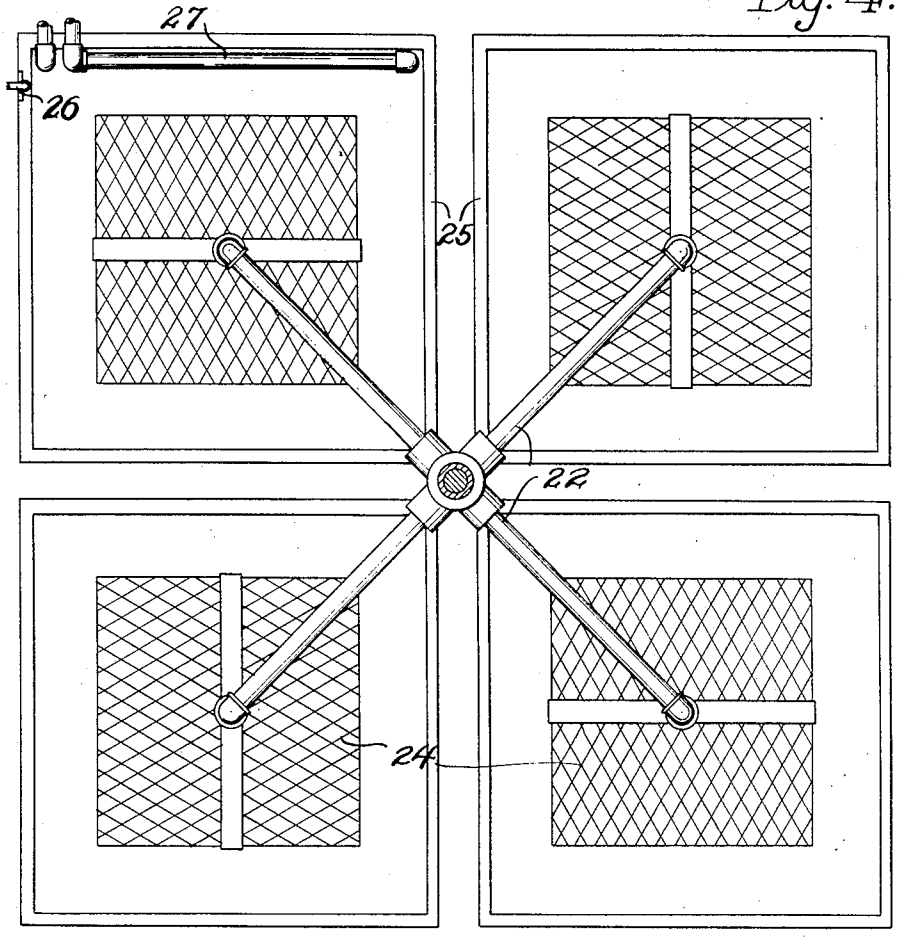

Inventor.
George H. North.
per Joseph A. Miller
Attorney.

UNITED STATES PATENT OFFICE.

GEORGE H. NORTH, OF CRANSTON, RHODE ISLAND, ASSIGNOR TO GORHAM MANUFACTURING COMPANY, OF PROVIDENCE, RHODE ISLAND, A CORPORATION OF RHODE ISLAND.

SILVERWARE CLEANING AND WASHING MACHINE.

1,376,379. Specification of Letters Patent. Patented Apr. 26, 1921.

Application filed May 17, 1920. Serial No. 381,839.

To all whom it may concern:

Be it known that I, GEORGE H. NORTH, a citizen of the United States, residing at Cranston, in the county of Providence and State of Rhode Island, have invented new and useful Improvements in Silverware Cleaning and Washing Machines, of which the following is a specification.

This invention relates to certain new and useful improvements in a silverware cleaning and washing machine, and it has for its primary aim and object to provide improved means for immersing the container for the silverware in the liquid bath and agitating or vibrating the same when therein to cause a thorough and more effective cleansing and washing action.

The invention further resides in a plural container mechanism for dipping or immersing each container successively in a bath, effecting reciprocation of the containers therein, elevating the container from the bath and disposing it for being lowered into another bath, all in an automatic manner and without any attention from the operator except to remove the silverware or the basket containing the same at the completion of each cycle of movement.

The invention will further be found in the features of construction, and the arrangements and combinations of parts hereinafter described and claimed, reference being had to the accompanying drawings wherein:

Figure 1 is a vertical sectional view of the improved machine embodying the present invention;

Fig. 2 is a detailed vertical section taken at right angles thereto for further elucidating the construction thereof;

Fig. 3 is a horizontal section on line 3—3 of Fig. 1 depicting the drive mechanism from another point of view, and

Fig. 4 is a cross section on line 4—4 of Fig. 1 showing the tank and basket arrangement.

Referring more in detail to the drawings the vertical shaft 1 is journaled at its upper and lower ends in bearings 2 and 3, the upper bearing being arranged on the top frame work 4 which has a depending shaft hanger 5 for supporting the drive shaft 6. This shaft is equipped at its outer end with tight and loose pulley 7 and 8 and on its inner end carries a worm 9 which meshes with a worm gear 10 fixed on a counter shaft 11, and this latter shaft is connected through bevel gearing 12 and intermediate shaft 12′, and bevel gearing 12″, to a vertical shaft 13 that carries on its upper end a large gear wheel 14. The periphery of wheel 14 is smooth except for a small group of teeth 15 which are adapted to mesh with one of a series of groups of teeth 16 on a smaller gear 17 for imparting to the latter a partial revolution, in the present instance one-quarter turn. Between the groups of teeth 16 extend four radial arms 18 adapted to overlie the larger gear wheel and be engaged by a pin 19 thereon to impart slight movement to the smaller gear sufficient to bring the teeth 16 into mesh with teeth 15, as is obvious. The gear 17 is fixed on the shaft 1, and therefore, every revolution of gear 14 will effect a one-quarter turn to the shaft.

A sleeve 20 is slidably splined at 21 on the shaft 1 and carries on its lower end four radial arms 22 having hooks 23 depending from their outer extremities for detachably suspending the wire baskets 24 which receive the silver, or other ware, to be cleaned.

About the base of shaft 1 are arranged four tanks 25 for containing the chemical solutions or other cleansing liquids. One or more tanks may be electrically connected to a source of electrical energy by conductor 26, and to a steam supply through heating pipes 27. A commutator 28 is fixed on shaft 1 for wiping a fixed contact 29 that is insulated from the tanks although supported therefrom by the superstructure 30, said commutator being connected through wiring 31 to the several suspension hooks 23. Consequently upon lowering the baskets or other containers down into the liquids in the tanks the several circuits will be established to cause the desired electro-chemical action.

Fixed on the vertically movable sleeve 20, above the arms 22, is a collar 32 which is supported antifrictionally upon a ring 33 having trunnions 34 journaled in the lower ends of a pair of links 35. A lever 36 is fulcrumed at one end as indicated at 37, on the frame 4, and intermediate its ends, as at 38, the links are pivoted to the said lever so that the weight of the sleeve and baskets is carried by the lever. A counter weight 39 is suspended on one end of a cable 40 which takes over a sheave 41 and is connected at its opposite end to the free end of the lever to

thereby counter-act to a degree the load thereon.

A cam 42 is fixed on the shaft 11 for acting upon a follower arm 43 provided on the lever in proximity to its fulcrum support. Obviously, movement of the lever by the cam imparted to the baskets and to accord a vertical reciprocatory motion thereto the active peripheral face of the cam is provided with a series of undulations or, in other words, the periphery of the cam presents a series of hills and dales for passing beneath the follower arm 43. A lift projection 44 interrupts the series of undulations about the periphery of the cam for elevating the baskets out of the tanks, the dwell of the cam projection 44 being sufficiently great to afford the operator time to remove one basket and replace another.

In operation, the one or more baskets containing the silverware is or are placed on the hooks 23, the heat supplying steam is turned into the coils 27 for heating the required bath or baths, and the electric circuit arranged for being closed upon the container coming into contact with the bath. Through means of the wiring the silverware in the basket 24 is connected as the cathode. The power is then turned on, as by shifting a driving belt from the loose to the light pulley, which starts the rotation of the cam 42 and the gear wheel 14. As the follower arm 43 rides down the lift projection 44 the lever 36 lowers the sleeve and supported arms and containers so that the latter will become immersed in the underlying baths. As the arm 43 rides over the series of undulations the basket-carrying frame will be accorded a like number of short vertical reciprocations, thereby agitating both the bath and the silverware to more thoroughly cleanse and wash the articles. Upon completing the riding over the series of undulations the arm then ascends the lift cam which results in elevating the baskets from the baths, during which rest period the gear wheel 14 imparts a quarter turn to the basket-carrying frame and also, at this time, the operator may remove the container that has completed its cycle of immersions and replace it by another one containing another supply of silverware to be cleaned when the lowering and vertical reciprocation of the baskets will be repeated with the only difference that the remaining baskets will have been advanced one bath.

The operation is efficient and reliable, requiring no attention from the operator except as to the loading and unloading of the containers. Although four tanks are here depicted it is obvious that any number may be utilized and a corresponding gear be substituted for gear 17 to advance the baskets more or less than one quarter revolution. Two or more vats or tanks may contain a chemical solution for removing the polishing material from the silver, as may be desired.

Having thus described my invention, what I claim as new and desire to secure by Letters Patent is:—

1. In a machine for cleaning silverware, a vertically movable support having a ware-carrying arm on its lower end, a lever having a fixed fulcrum and rotatably connected to the support for raising and lowering the latter, means acting upon the lever to raise and lower the support, and means for intermittently rotating the support.

2. In a machine for cleaning silverware, a vertically movable support having a ware-carrying arm on its lower end, a lever having a fixed fulcrum and rotatably connected to the support for raising and lowering the latter, a gear connected to the support for rotating the same, and an interrupted gear adapted to intermesh with the first gear for intermittently driving the same.

3. In a machine for cleaning silverware, a vertically movable support having a ware-carrying arm on its lower end, a lever having a fixed fulcrum and rotatably connected to the support for raising and lowering the latter, a gear connected to the support for rotating the same, an interrupted gear for intermittently driving the first gear, and means for bringing the gears into mesh with one another.

4. In a machine for cleaning silverware, a vertically movable support having a ware-carrying arm on its lower end, a lever having a fixed fulcrum and rotatably connected to the support for raising and lowering the latter, means for intermittently rotating the support, and means for imparting oscillatory motion to the lever.

5. In a machine for cleaning silverware, a vertically movable support having a ware-carrying arm on its lower end, a lever having a fixed fulcrum and rotatably connected to the support for raising and lowering the latter, means for intermittently rotating the support, and a cam acting upon the lever to vibrate the same.

6. In a machine for cleaning silverware, a vertically movable support having a ware-carrying arm on its lower end, a lever having a fixed fulcrum and rotatably connected to the support for raising and lowering the latter, means for intermittently rotating the support, and a cam having a series of undulations and a larger, lift projection for engaging the lever to successively vibrate and then lift the ware-carrying arm.

7. In a silverware cleaning machine, a rotating support, a series of tanks thereabout one of which is grounded in one side of an electric circuit, a commutator on the support, a fixed brush for connecting the commutator to the other side of the circuit, a plurality of ware-carrying members rota-

table with the support and electrically connected to the commutator for successive connection with the brush, and means for raising and lowering the arms from and into the tanks to thereby establish the electric circuit.

8. In a silverware cleaning machine, a rotating support, a series of tanks thereabout one of which is grounded in one side of an electric circuit, a commutator on the support, a fixed brush for connecting the commutator to the other side of the circuit, a plurality of ware-carrying members rotatable with the support and electrically connected to the commutator for successive connection with the brush, means for vibrating the arms to agitate the silverware when in the baths of the tanks, and means for lowering and raising the silverware to and from the tanks.

9. In a cleaning machine, a rotary article carrier mounted for reciprocal movement to and from a bath, means for intermittently moving the carrier to and from the bath, means for imparting rotary movement to the carrier during the operation of said first means, and means operable during a rest period of said first means for imparting a vibratory movement to the carrier when in the bath.

10. In a cleaning machine, a cam having a raised rest section and a relatively lower active hill-and-dale section, a follower member coöperating with the cam sections, and a carrier raised and lowered by the cam through the follower member and when lowered adapted to be vibrated by the hill-and-dale section of said cam.

11. In a cleaning machine, a cam having a raised rest section and a relatively lower active hill-and-dale section, a follower member coöperating with the cam sections, a carrier raised and lowered by the cam through the follower member and when lowered adapted to be vibrated by the hill-and-dale section of said cam, and means operable during the action of the rest period of the cam for moving the carrier laterally.

12. In a cleaning machine, a rotary supporting shaft, a carrier-supporting sleeve, slidable thereon and adapted for supporting an article carrier for movement to and from a cleansing bath, means for sliding the sleeve on the shaft, and a connection between the sleeve and the first means consisting of a collar encircling the sleeve and rotatably connected therewith and a link connection between the collar and said first means.

13. In a cleaning machine, a rotary supporting shaft, a carrier-supporting sleeve, slidable thereon and adapted for supporting an article carrier for movement to and from a cleansing bath, a cam for sliding the sleeve on the shaft, a follower lever coacting with the cam, a collar rotatably embracing the sleeve, and means connecting the lever to the collar.

14. In a cleaning machine, a rotary supporting shaft, a carrier-supporting sleeve, slidable thereon and adapted for supporting an article carrier for movement to and from a cleansing bath, a cam for sliding the sleeve on the shaft, a follower lever coacting with the cam, a collar rotatably embracing the sleeve, a connection between the collar and lever, and means for rotating the shaft.

15. In a cleaning machine, a rotary supporting shaft, a carrier-supporting sleeve, slidable thereon and adapted for supporting an article carrier for movement to and from a cleansing bath, a cam for sliding the sleeve on the shaft, a follower lever coacting with the cam, a collar rotatably embracing the sleeve, a connection between the collar and lever, a star wheel fixed on the shaft, and a pin wheel coöperating with the star wheel for rotating the shaft intermittently.

16. In a cleaning machine, a rotary supporting shaft, a carrier-supporting sleeve, slidable thereon and adapted for supporting an article carrier for movement to and from a cleansing bath, a cam for sliding the sleeve on the shaft, a follower lever coacting with the cam, a collar rotatably embracing the sleeve, a connection between the collar and lever, a star wheel fixed on the shaft, and a pin wheel coöperating with the star wheel for rotating the shaft intermittently, said star wheel having gear teeth between its arms and said pin wheel having a peripheral section provided with coöperating gear teeth to move the succeeding arm of the star wheel into the path of the pin on the pin wheel.

In testimony whereof I have signed my name to this specification in the presence of two subscribing witnesses.

GEORGE H. NORTH.

Witnesses:
E. P. TOOMEY,
J. A. MILLER.