(No Model.)

S. H. SHORT.

CONNECTOR AND SUPPORT FOR TROLLEY WIRES.

No. 456,252. Patented July 21, 1891.

FIG. III.

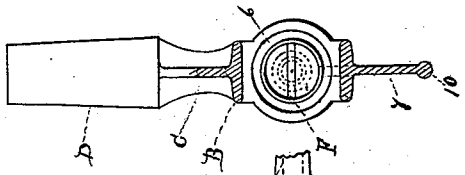

FIG. I.

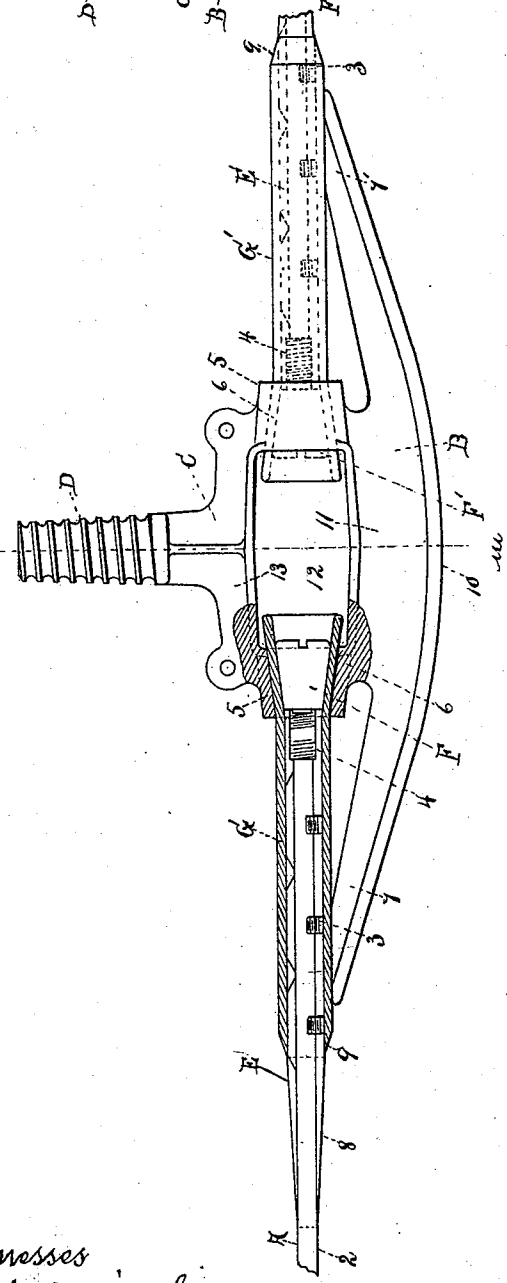

FIG. II.

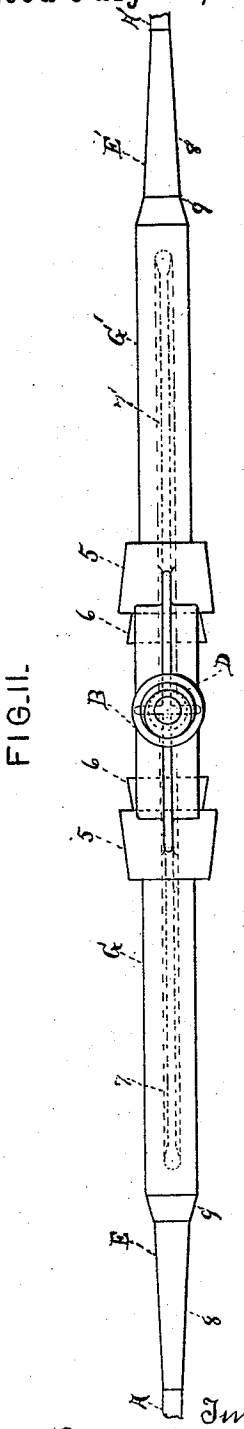

Witnesses
S. G. Nottingham
V. E. Hodges

Inventor
Sidney H. Short.
By his Atty
H. A. Seymour

THE NORRIS PETERS CO., PHOTO-LITHO., WASHINGTON, D. C.

UNITED STATES PATENT OFFICE.

SIDNEY H. SHORT, OF CLEVELAND, OHIO, ASSIGNOR TO THE SHORT ELECTRIC RAILWAY COMPANY, OF SAME PLACE.

CONNECTOR AND SUPPORT FOR TROLLEY-WIRES.

SPECIFICATION forming part of Letters Patent No. 456,252, dated July 21, 1891.

Application filed October 29, 1890. Serial No. 369,692. (No model.)

To all whom it may concern:

Be it known that I, SIDNEY H. SHORT, of Cleveland, in the county of Cuyahoga and State of Ohio, have invented certain new and useful Improvements in Connectors and Supports for Trolley-Wires of Electric Railways; and I do hereby declare the following to be a full, clear, and exact description of the invention, such as will enable others skilled in the art to which it appertains to make and use the same.

This invention relates more particularly to an insulating and supporting connector for a sectional trolley wire or conductor to be used in connection with underrunning trolleys or travelers, the conductor-sections being insulated from one another. The sections are mechanically connected with one another by the connectors, which also support the sections, so that the trolleys may travel along the under side of the line composed of the connected sections. Each of the improvements constituting the said invention is, however, included for all the uses or applications to which it may be adapted—as, for example, some one or more of the said improvements may be useful in a non-insulating connector or in a connector which does not support the connected wires from the ground, or in a support which is not a connector, or for a connector or support or combined connector and support which is not adapted to underrunning trolleys or travelers.

In accordance with the present invention the adjacent ends of the neighboring sections of the trolley-wire are joined together by the insulating and supporting connectors, each of which is so arranged that there is a bearing-surface below for the trolleys or travelers, and the part (or parts) which supports the connector and the connected ends of the conductor-sections is placed in such a position that it does not interfere with the passage of the travelers or trolleys under and in contact with such bearing-surface. Preferably at the connectors the trolleys leave the conductor-sections and travel on the connectors; but the invention extends generally to an insulating connector and support arranged, as just stated, irrespective of the interposition of a bearing-surface on the connector between the sections. Preferably, also, a shank on the upper side of the connector is employed to support each connector, said shank being adapted to be held in an insulator.

A further improvement in this connection consists in providing a supporting-connector (insulating or otherwise) for the conductor-section of a trolley-wire for underrunning trolleys with bracket-arms, which extend under the conductor-sections and which form the track or part of the track for underrunning trolleys in passing from one of the connected conductor-sections to the next. Preferably the insulating-connectors comprise a metal frame, to which adjacent conductor-sections are secured directly or indirectly, insulating material being interposed. The bracket-arms before referred to are preferably, also, of metal, and may be made in one piece with or otherwise attached to the rest of the connector. Further, the metal frame is preferably insulated from the ground, so that the conductor-sections are insulated from each other and from the ground at two points in series.

The foregoing improvements can be embodied in connectors of various forms. It is considered that they are best embodied in a connector which contains also the following features, which are also included in the invention severally, as well as in connection with one another, and with the foregoing improvements—that is to say:

First. The frame of the connector is made with an opening or open space between the conductor-sections, which are secured to the connector by means of heads or enlargements, which engage portions of the said frame on either side of the opening.

Second. The heads or enlargements for securing the conductor-sections to the connectors are made of frusto-conical form and take into similarly-shaped sockets on the connectors, insulating material being interposed between the head and the wall of the socket when it is desired to insulate a metallic head on the conductor-section from a metallic socket.

Third. The heads are made separate from

the conductor-sections and are secured thereto by means of sleeves, which are slipped over the conductor and are fastened thereto by screws or otherwise. Preferably the heads are separate pieces from the sleeves and are screwed into the threaded end of the same after the latter have been fastened to the conductor-sections and in the act of securing the conductor-section to the connectors.

Fourth. Bracket-arms extend beyond the points where the conductor-sections are secured to the connectors, and insulating-tubes are slipped over the conductors where they rest against the ends of the said brackets.

Fifth. A connection having a depending flange whose edge forms a bearing-surface for the trolleys extends between the devices for attaching the conductor-sections to the connector.

Sixth. A part (at least) of the bearing-surface for the trolley between the connected sections is made of insulating material.

In the accompanying drawings, which form part of this specification, Figure I is a side view, partly in longitudinal section. Fig. II is a plan, and Fig. III is a cross-section on line *i i i* of Fig. I, of an insulating and supporting connector for sectional conductors constructed in accordance with the invention.

A A′ are adjacent sections of a trolley-wire or supply-conductor, making part of the track for traveling contacts or trolleys, their under side 2 forming the trolley bearing-surface or contact-surface for the underrunning trolleys. They are united at each joint by a metal connector B, (say of malleable cast-iron,) provided with a connector-support C, having a shank D, which may fit in an insulator. (Not shown.) As shown, each conductor-section is secured in a metal sleeve E (or E′)—say of brass—which is slipped over the conductor and fastened thereto by the screws 3, and the conductor-section is then attached to the connector B by a head F, (or F′,) which is secured into the threaded end 4 of the sleeve. This end projects beyond the conductor or trolley-wire. Each head engages a conductor-attaching device 5 in the connector. The heads F F′ are frusto-conical and the conductor-attaching devices 5 are sockets of corresponding shape. Around the sleeves E E′ are tubes G G′, respectively, of insulating material, (hard rubber, for example) and between the heads F F′ and their corresponding sockets 5 are bushings 6 of insulating material, which may be formed by the flaring ends of the tubes G G′ or may be made separately—say of mica. Under the conductor-sections are the bracket-arms 7 and 7′, on which the insulating-tubes G G′ rest. The ends of the sleeves E E′ away from the conductor-attaching devices or sockets 5 are beveled, as shown at 8. The ends 9 of the insulating-tubes are beveled also. As shown, therefore, the sleeves E E′, tubes G G′, and connector B form part of the trolley-track, as well as the conductor-sections A A′, the trolley bearing-surface 2 of the wires or conductor-sections A A′ being continued by the bevels 8 and 9, and the under edge 10 of the bracket-arms 7 and 7′, and of the intermediate portion 11 of the connector, so that the conductor-attaching devices 5 are above the said bearing-surface and the trolleys are free to travel under the connector and the connected ends of the insulated conductor. The connector-support C, or means for upholding the connector B and connected ends of the conductor-sections A A′, joins the connector (with which it may be cast integral) above the trolley bearing-surface, and therefore does not interfere with the free passage of trolleys, which run under their track or the bearing-surface thereof. Between the conductor-attaching devices 5 the connector B is provided with an opening 12. On opposite sides of the opening 12 are the braces or connections 11 and 13, the connection 11 being provided with a flange whose outer edge forms part of the trolley bearing-surface, as already described, and the connection 13 serving to unite the attaching devices 5 to the connector-support with its shank D C.

The operation of the apparatus, as shown, will be readily understood. The electricity is supplied to the conductor-sections A A′ in any known or suitable way and is taken therefrom by underrunning trolleys or contacts, such as a groove-roller mounted on a spring pressed, hinged, and swiveled pole, as in common use, or other known or suitable form of underrunning trolley. The roller or contact travels along the trolley bearing-surface 2 of one conductor-section, as A, along the under part of the beveled edges 8 and 9 of the corresponding sleeve E and insulating-tube G, along the under edge 10 of the bracket-arm 7 and flanged connection 11 below the conductor-attaching devices 5 and connector-support to C the under sides of the bracket-arm 7′, tube G′, sleeve E′, and conductor-section A′, and thence along the under surface 2 of said section to the next connection. If it be not desired to insulate the conductor-sections from the connector, it is evident that the connector shown could be used by omitting the insulating-tubes G G′ and bushings 6, the sleeves E E′ and heads F F′ being adapted to fit the sockets 5 and bracket-arms 7 and 7′.

Having fully described my invention, what I claim as new, and desire to secure by Letters Patent, is—

1. In combination with a sectional trolley-wire for underrunning trolleys, an insulating-connector comprising a metal frame provided with a trolley bearing-surface and with conductor-attaching devices above the trolley-bearing-surface and having insulation between the conductor-sections and said frame, substantially as described.

2. In combination with a sectional trolley-

wire for underrunning trolleys, an insulating and supporting connector comprising a metal frame provided with a trolley bearing-surface and with conductor-attaching devices above the trolley bearing-surface, and a connector-support, also above said surface, insulating material being interposed between the conductor-sections and said frame, substantially as described.

3. In combination with a sectional trolley-wire for underrunning trolleys, an insulating and supporting connector comprising a metal frame provided with a trolley bearing-surface and with conductor-attaching devices above the trolley bearing-surface, and a connector-support, also above said surface, insulation being interposed between the conductor-sections and the said frame and between the latter and the ground, substantially as described.

4. In combination with a trolley-wire for underrunning trolleys, a supporting-connector for the conductor-sections, provided with a trolley bearing-surface and with conductor-attaching devices, and a connector-support above the trolley bearing-surface and having also bracket-arms extending under the conductor-sections, with the lower edges making part of the trolley bearing-surface, substantially as described.

5. In combination with a sectional trolley-wire for underrunning trolleys, an insulating and supporting connector comprising a metal frame provided with a trolley bearing-surface and with conductor-attaching devices above the trolley bearing-surface, and a connector-support, also above said surface and having also bracket-arms extending under the conductor-sections and forming part of the trolley-track, insulation being interposed between the said conductor-sections and said frame, substantially as described.

6. A connector for sectional trolley-wires formed with a trolley-track and conductor-attaching devices and an open space between the same, in combination with conductor-sections and heads or enlargements secured thereto and to the conductor-attaching devices, substantially as described.

7. An insulating-connector for sectional trolley-wires, comprising a metallic frame formed with a trolley-track and having conductor-attaching devices and an opening between the same, in combination with conductor-sections and heads or enlargements secured thereto and to the conductor-attaching devices, and insulation between the conductor-sections and the connector, substantially as described.

8. A supporting-connector formed with conductor-attaching devices and a connector-support having an open space between the conductor-attaching devices, in combination with conductor-sections with heads or enlargements secured thereto and to the connector, substantially as described.

9. A connector for sectional trolley-wires formed with a trolley-track and provided with frusto-conical sockets, in combination with conductor-sections provided with heads of corresponding form engaging said sockets, substantially as described.

10. An insulating-connector for sectional trolley-wires, comprising a metal frame formed with a trolley-track and with frusto-conical sockets, in combination with conductor-sections provided with heads of corresponding form, and insulation interposed between said heads and said sockets, substantially as described.

11. The combination of the socketed connector, the conductor-sections, the sleeves, and the heads, substantially as described.

12. The metallic connector provided with conductor-attaching devices and bracket-arms of metal extending beyond said devices, in combination with the conductor-sections secured to said devices, and the insulating-tubes around the sections above the bracket-arms, substantially as described.

13. A connector provided with conductor-attaching devices and an intermediate flanged connection which unites said devices and is formed with an unbroken edge constituting a continuous trolley bearing-surface, substantially as described.

14. A sectional trolley-wire composed of conductor-sections and insulating and supporting connectors, and provided with a track or trolley bearing-surface composed at least in part of insulating material between the connected sections, substantially as described.

15. A supporting-connector comprising a socketed metal frame with bracket-arms below and a connector-support above the sockets, substantially as described.

16. A supporting-connector comprising a socketed metal frame with bracket-arms below and a connector-support above the sockets, in combination with the conductor-sections, the sleeves, and the heads, substantially as described.

17. A supporting and insulating connector comprising a socketed metal frame with bracket-arms below and a connector-support above the sockets, in combination with the conductor-sections, the sleeves, the heads, the insulating-tubes, and the insulating-bushings, substantially as described.

In testimony whereof I have signed this specification in the presence of two subscribing witnesses.

SIDNEY H. SHORT.

Witnesses:
A. B. CALHOUN,
C. J. LEEPHART.