May 28, 1940. 2,202,702

K. A. LINDNER ET AL

MATERIAL HANDLING MECHANISM

Filed Nov. 15, 1938 6 Sheets-Sheet 1

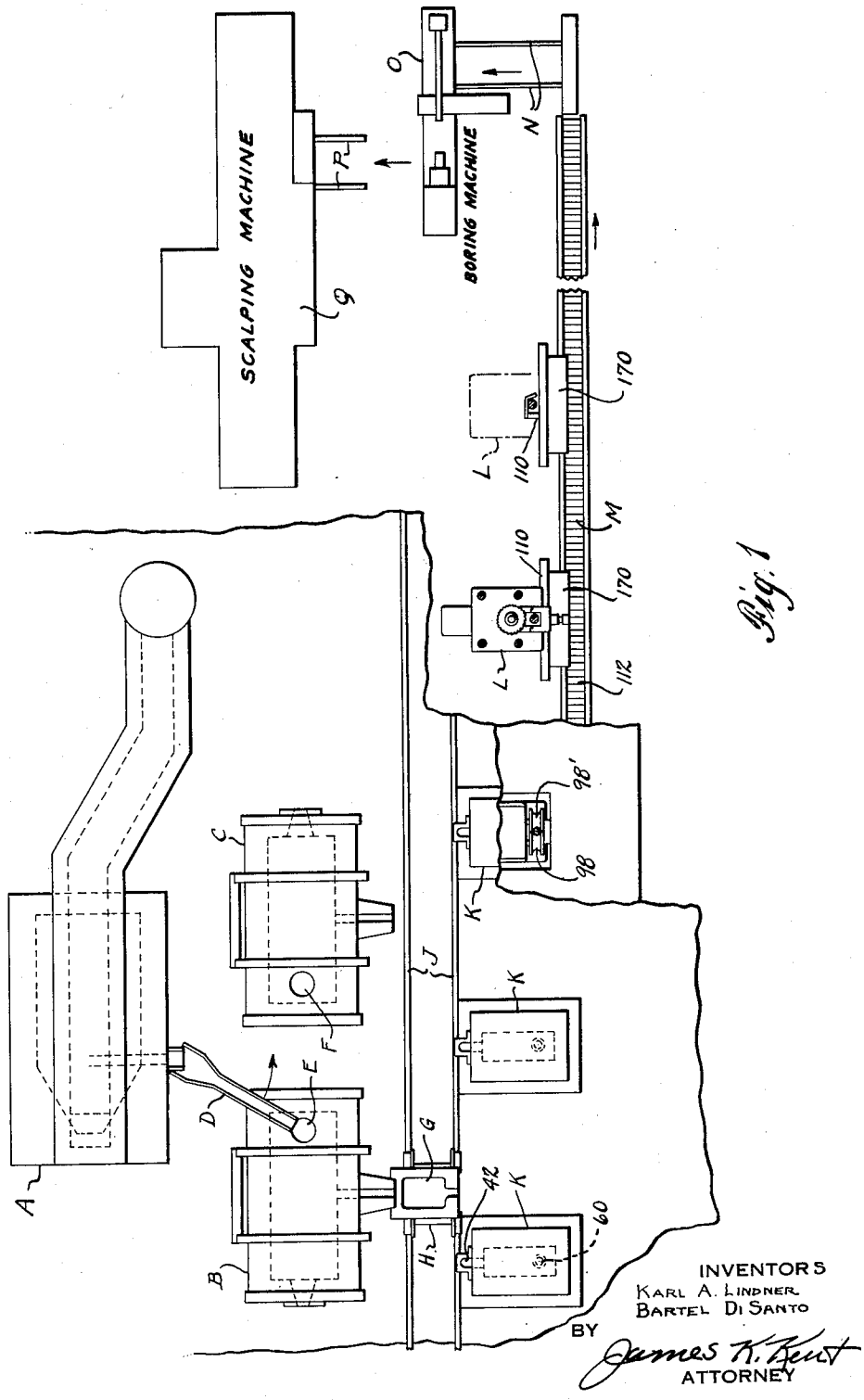

Fig. 1

INVENTORS
KARL A. LINDNER
BARTEL DI SANTO

BY James K. Kent
ATTORNEY

May 28, 1940. K. A. LINDNER ET AL 2,202,702

MATERIAL HANDLING MECHANISM

Filed Nov. 15, 1938 6 Sheets-Sheet 2

Fig. 2

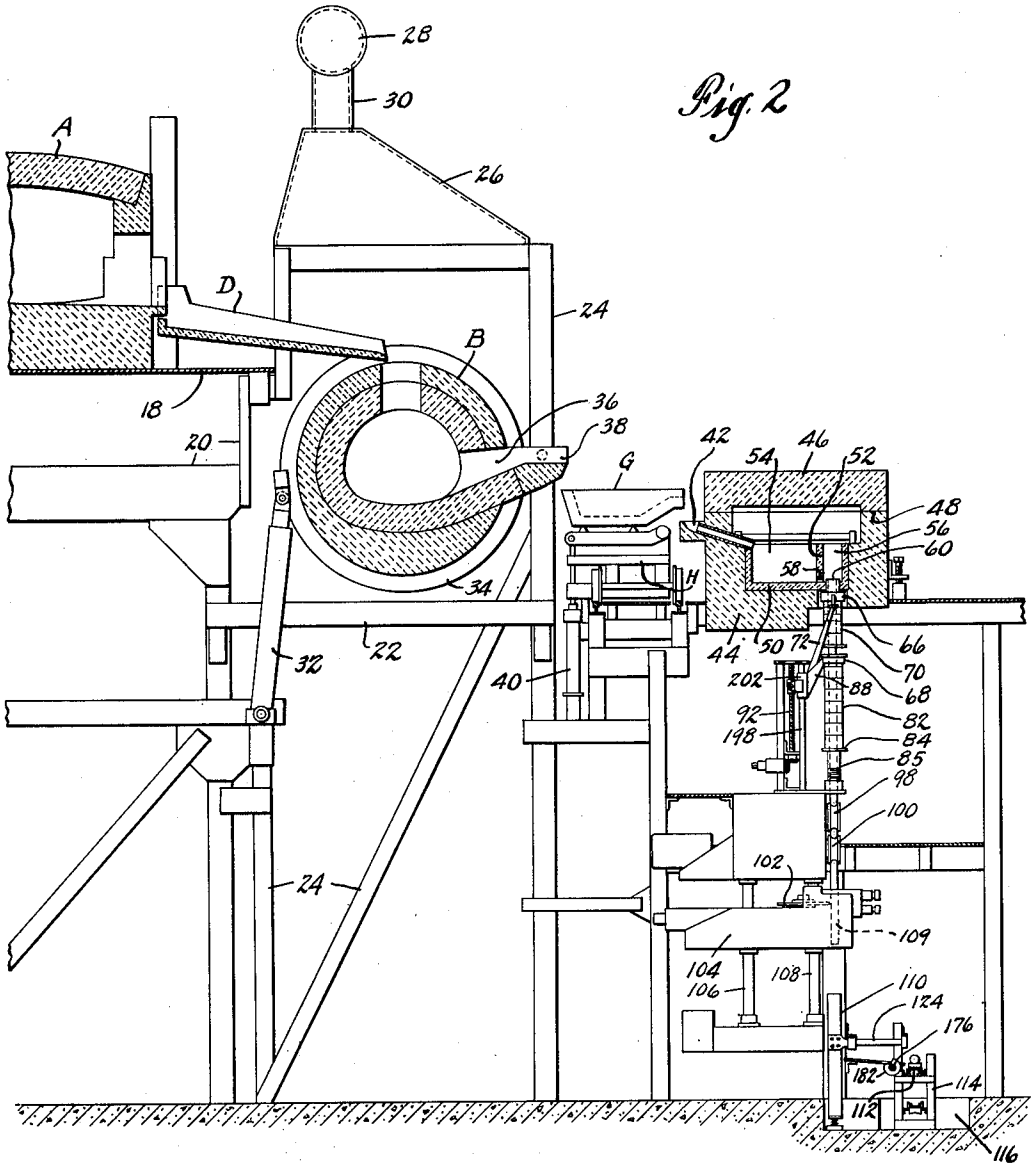

INVENTORS
KARL A. LINDNER
BARTEL DI SANTO

BY James K. Kent
ATTORNEY

May 28, 1940. K. A. LINDNER ET AL 2,202,702

MATERIAL HANDLING MECHANISM

Filed Nov. 15, 1938 6 Sheets-Sheet 3

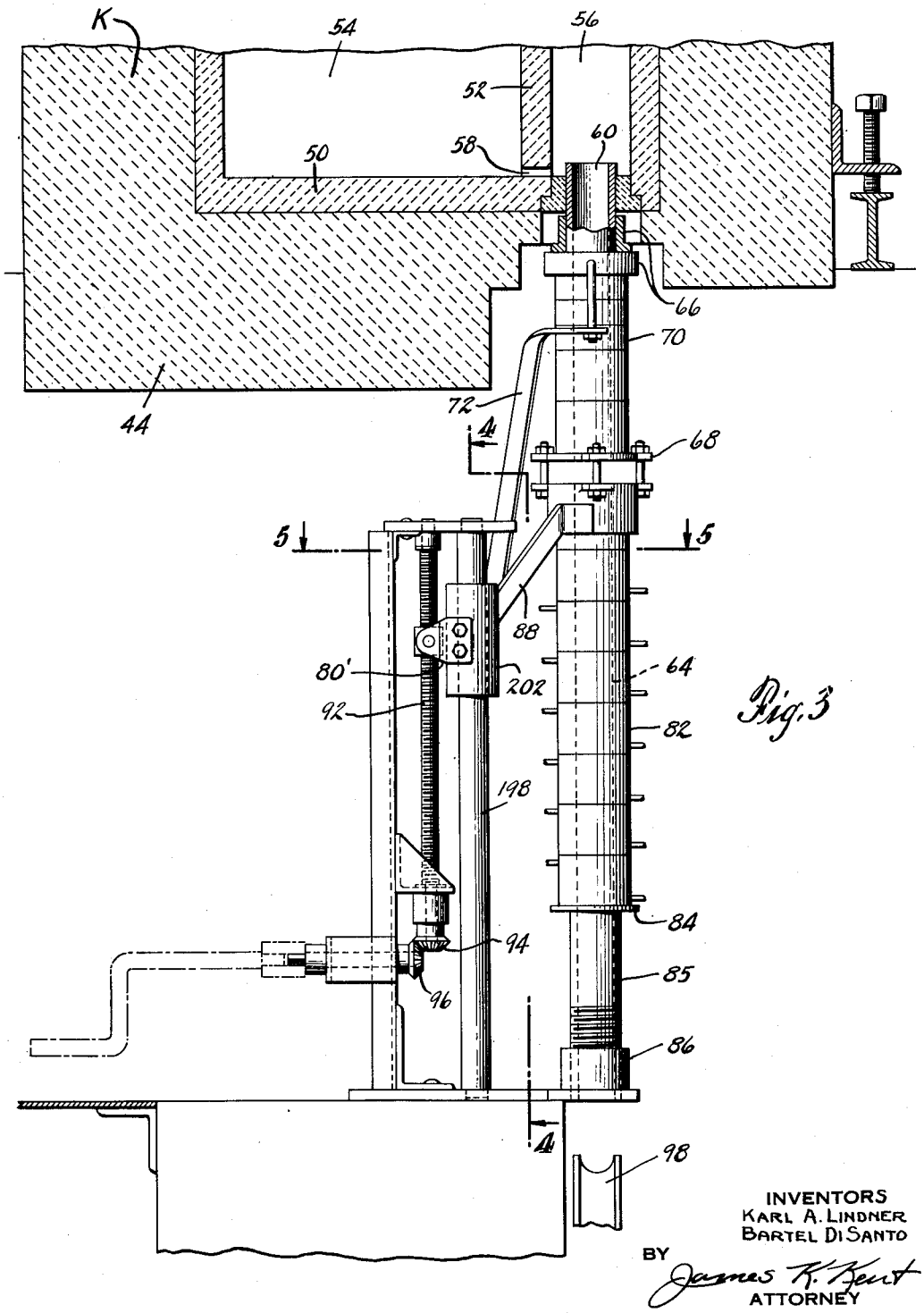

Fig. 3

INVENTORS
KARL A. LINDNER
BARTEL DI SANTO

BY James K. Kent
ATTORNEY

May 28, 1940. K. A. LINDNER ET AL 2,202,702

MATERIAL HANDLING MECHANISM

Filed Nov. 15, 1938 6 Sheets-Sheet 4

Fig. 4.

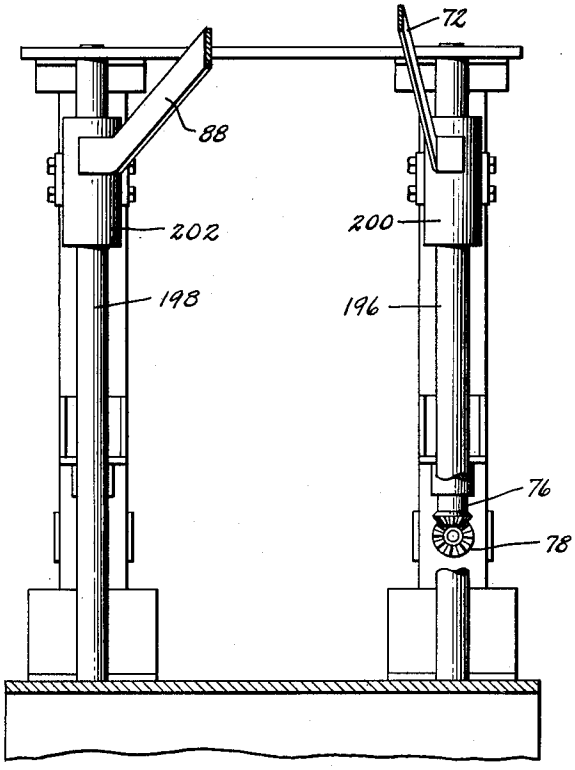

Fig. 5.

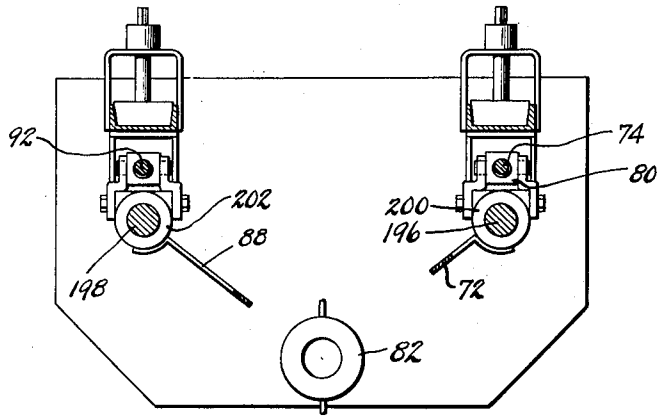

INVENTORS
KARL A. LINDNER
BARTEL DiSANTO

BY James R. Kent

ATTORNEY

May 28, 1940. K. A. LINDNER ET AL 2,202,702

MATERIAL HANDLING MECHANISM

Filed Nov. 15, 1938 6 Sheets-Sheet 5

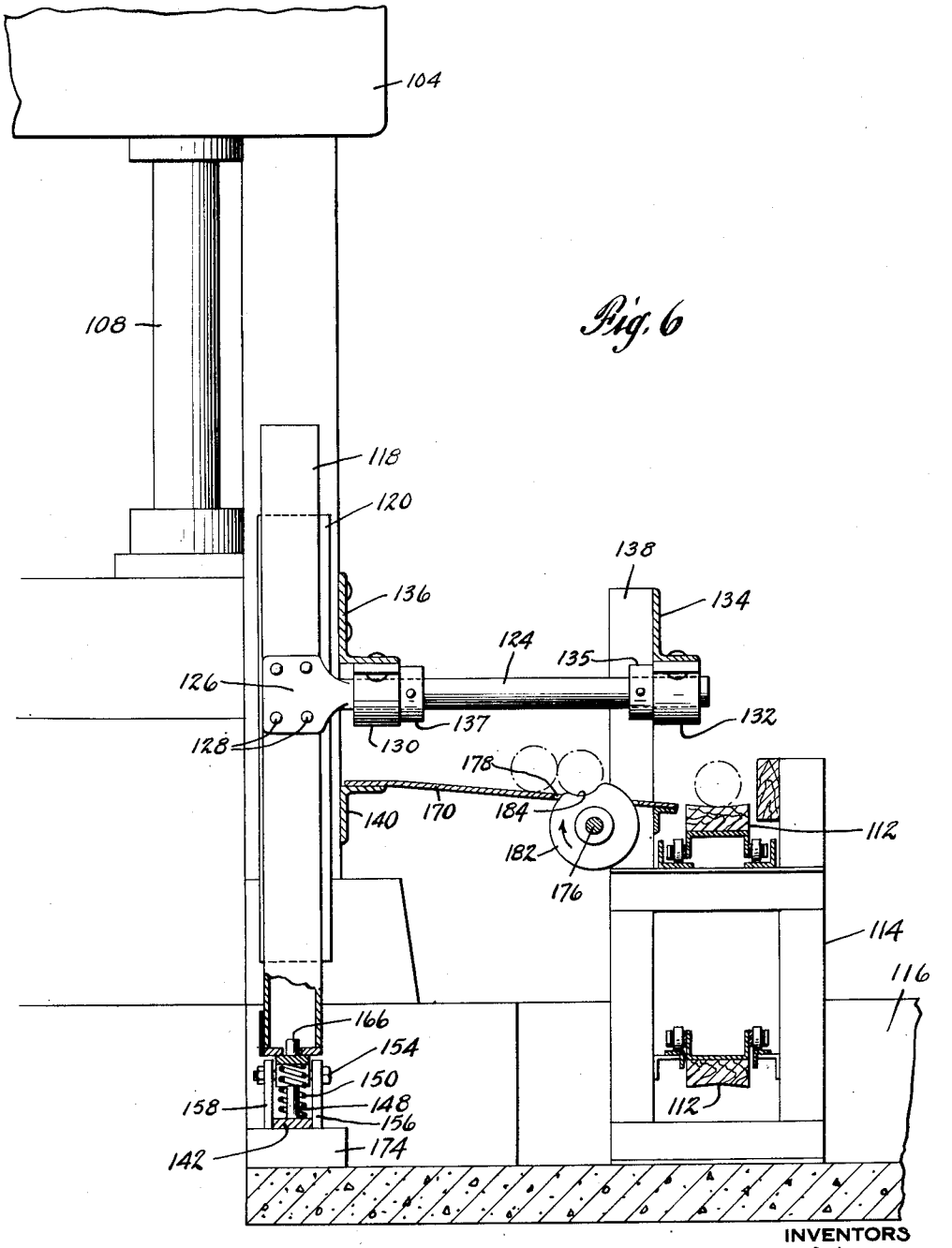

Fig. 6

INVENTORS
KARL A. LINDNER
BARTEL DI SANTO

BY James K. Kent
ATTORNEY

May 28, 1940. K. A. LINDNER ET AL 2,202,702

MATERIAL HANDLING MECHANISM

Filed Nov. 15, 1938 6 Sheets-Sheet 6

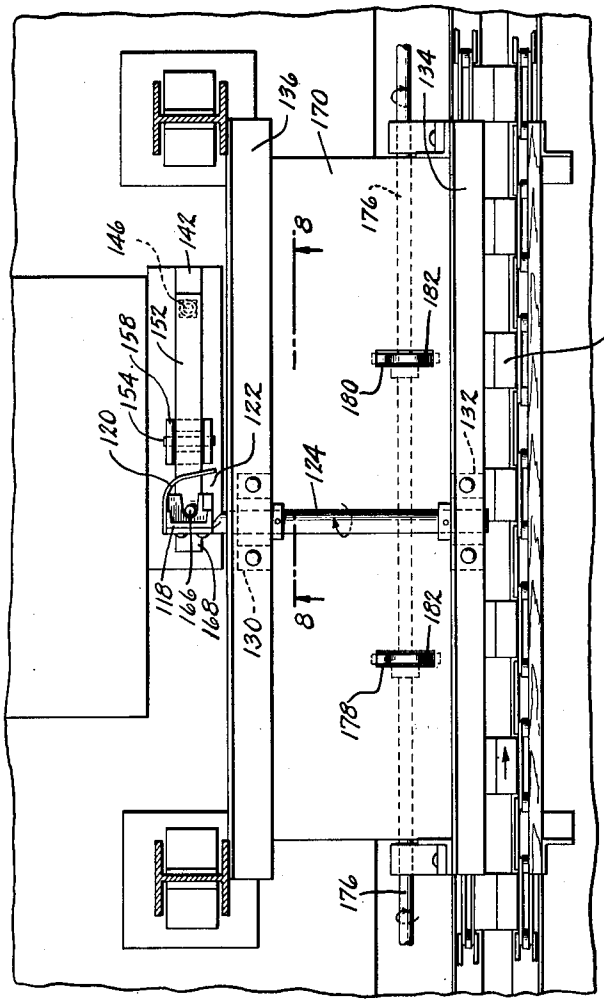

Fig. 7

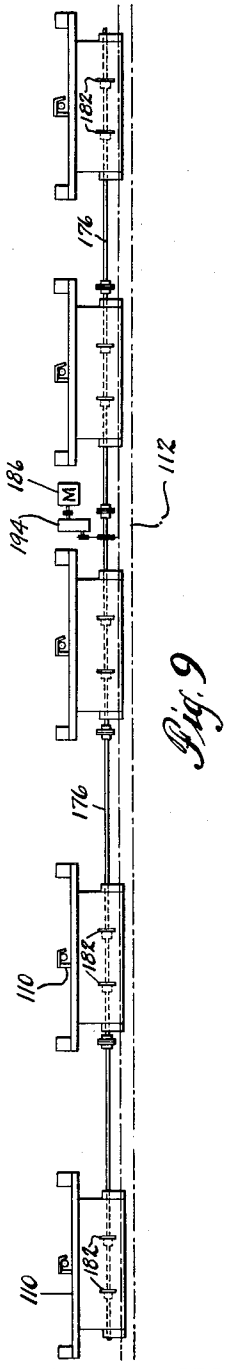

Fig. 9

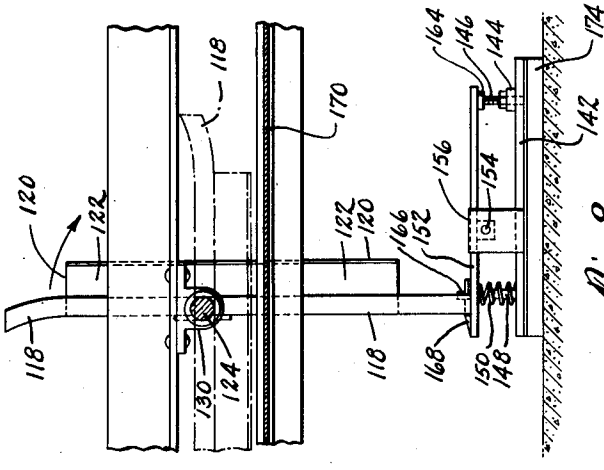

Fig. 8

INVENTORS
KARL A. LINDNER
BARTEL DI SANTO

BY James K. Kent
ATTORNEY

Patented May 28, 1940 2,202,702

UNITED STATES PATENT OFFICE

2,202,702

MATERIAL HANDLING MECHANISM

Karl A. Lindner, Plainfield, and Bartel Di Santo, Woodbridge, N. J., assignors to American Smelting and Refining Company, New York, N. Y., a corporation of New Jersey

Application November 15, 1938, Serial No. 241,148

21 Claims. (Cl. 29—33)

The present invention pertains to an improved system of apparatus for the continuous casting of metal shapes such as billets or the like, and for the handling of such continuously cast shapes in an expeditious manner from the casting through the finishing operations.

In the continuous casting of metal shapes, such as rod or the like, the practice in general is to lead molten metal, for example, copper, phosphorized copper and copper base alloys, from a suitable supply thereof into a casting mold or die provided with an internal bore or channel extending through the die, which channel defines a congelation chamber for the metal, the die being provided with cooling means for extracting heat from the molten metal, and effecting solidification of the metal in the said congelation chamber. The channel is first closed from its delivery end by a starting rod of the metal being cast, which is held in position so as to plug the delivery end of the channel, so that as the molten metal being cast passes into the channel, it welds to the starting rod and becomes solidified, so that as the starting rod is withdrawn from the die, the newly solidified metal is withdrawn also, the molten metal from the supply or reservoir thereof continuously entering the die and solidifying therein in conformity with the rate of withdrawal of the cast metal from the delivery end of the die.

Of course the actual operation of the continuous casting procedure is far from being as simple as the above outline of the operation might indicate, especially where pure copper, or essentially pure copper is being produced, many problems having been encountered in the commercial development of the process; and the solution of which problems has entailed a great amount of detailed research work and the expenditure of large amounts of money in bringing the operations to a commercial scale. However, in general outline, the procedure follows the above "skeletonized" description of the operations.

This procedure has been developed to the point where it is feasible to cast copper, or other rod, of various diameters on a commercial scale, such rod having been produced in diameters ranging from less than ½ inch to more than three inches, the demands of the trade being fulfilled both as to diameter and quality or soundness of the casting.

In carrying out the operations of continuous casting at commercial casting speeds and with the heat extracted from the metal through the die, as distinguished from extraction of heat by conduction longitudinally through the rod, the metal is found to possess a distinctive crystalline structure wherein the crystals of the metal extend radially from the longitudinal axis of the rod being cast, and are inclined at least 45° to the said axis in the direction of the movement of the rod during casting, this angle approaching 90° with respect to the axis of the rod as the casting speed is increased.

This radial orientation of the crystals causes the crystals to terminate at the surface of the rod being cast, with the result that there may be a tendency to form outcroppings of the crystal ends with consequent formation of certain irregularities or unevenness in the surface of the casting, which however, is clean and bright, since the rod is produced customarily in a graphite die and is brought to below oxidizing temperatures while in a reducing environment.

In order to improve the surface of the castings, especially where the castings are of large diameter (billets) it is proposed to machine the said billets in order to remove any irregularities in the surface thereof; and the present invention provides an arrangement of a billet plant wherein the billets are produced by continuous casting, cut into suitable length, conveyed to the billet "scalping" machine and there machined, all without interruption to the strictly continuous operation of the casting procedure, thereby assuring maximum output of mechanically perfect continuously cast billets with the minimum of mechanical handling, and wherein the instrumentalities for carrying out the various manipulations are so co-ordinated as to their operation so that the cast metal is withdrawn continuously and without interruption from the casting furnace and the billets produced therefrom are delivered automatically to the scalping mechanism in accordance with the capacity of the latter, so that the entire procedure is carried on smoothly without interruption and with the maximum output of finished billets.

Further objects and advantages of the present improved construction will become apparent as the description proceeds, and the features of novelty will be pointed out in particularity in the appended claims; and the invention accordingly comprises the features of construction, combination of elements and arrangement of parts, which will be exemplified in the construction hereinafter set forth, and the scope of the application of which will be indicated in the claims.

The invention will be understood more read-

ily by referring to the accompanying drawings, in which:

Fig. 1 is a diagrammatic plan view of a plant lay-out in accordance with the present invention,

Fig. 2 is a sectional elevation of a portion of the assembly shown in Fig. 1 showing the arrangement of the several furnaces and parts of the apparatus immediately associated therewith,

Fig. 3 is a fragmentary side elevation of the apparatus showing mechanism for relative adjustment of the cooling jacket with the casting die or mold,

Fig. 4 is a front elevation of the mechanism shown in Fig. 3,

Fig. 5 is a sectional plan view of the mechanism shown in Fig. 4,

Fig. 6 is a vertical section of a form of mechanism for delivering billets from the sawing mechanism to conveying instrumentalities for transfer of the billets to the boring machine,

Fig. 7 is a plan view of the transfer mechanism shown in Fig. 6,

Fig. 8 is a view taken on the line 8—8 of Fig. 7, and

Fig. 9 is a diagrammatic plan view of the billet transfer control as applied to a plurality of stations.

Referring more particularly to the drawings, the general lay-out of the apparatus is illustrated diagrammatically in Fig. 1, from which it will be seen that the system of the present invention comprises a melting furnace A for the metal to be cast, (e. g. copper or copper-base alloys) for melting and refining the said metal, the said furnace A communicating with tilting furnaces indicated at B and C by means of a launder D which is shiftable from the melting furnace A to each of the tilting furnaces B and C for charging the latter as required with refined molten metal which is to be cast, and which may be refined further as may be required, the metal being discharged from the launder D into the furnaces B and C through suitable charge ports E and F.

Tilting furnaces B and C are arranged to pour metal therefrom into a ladle G which is tiltably mounted on a car H traveling along track J. Disposed at a plurality of stations along track J are any desired number of casting furnaces K, the construction of which may vary between wide limits, and which receive molten metal from ladle G. Each of the furnaces K is provided with a casting die for continuously casting the metal, and means for withdrawing the metal from the die in accordance with the rate of solidification of the metal in the die, and with instrumentalities for cutting and handling the billets into predetermined lengths during the course of the casting operations, all of which mechanism will be referred to in greater detail hereinafter.

The casting furnaces K are adapted to cast continuously large diameter rods which are convertible into billets by being cut off into suitable lengths through the instrumentalities of sawing mechanism provided beneath each furnace, as are illustrated at L. The cut billets are guided by novel guide instrumentalities which will be described hereinafter in detail, onto a suitable conveyor M, which discharges the billets onto inclined rails N leading to a boring or cupping machine O, where one end of the billet is drilled to provide a recessed guide for a piercing tool in the fabrication of tubes or pipes, from which cupping machine the billets are transferred along suitable inclined rails P to a "scalping" machine Q, where the surfaces of the billets are machined.

Reference may now be had to Fig. 2, where it will be seen that the melting furnace A is mounted on a working floor or platform 18, which is supported by framework 20 above the level of the tilting furnace B, which in turn is supported on a working platform 22 carried by framework 24. A hood 26 surmounts the tilting furnace, the hood 26 leading to a flue 28 through pipe 30. The furnace B is tilted through any suitable instrumentalities, which may be illustrated by a hydraulic ram 32, the furnace being provided with annular tracks 34 for enabling the furnace B to be tilted.

Each of the furnaces B has sufficient capacity to provide an adequate reserve of molten metal to maintain the casting furnaces K fully supplied with metal at the casting rates which are employed, and the melting furnace is of still sufficiently larger capacity to provide a supply of molten metal to the tilting furnaces in order to maintain these latter adequately supplied.

Each of the tilting furnaces is provided with a discharge port 36, and a discharge lip 38 which guides the metal being discharged from the furnaces B into the ladle G. It will be apparent that the ladle may be run along on its car to the respective stations for receiving metal from the tilting furnaces and for discharging the molten metal into the casting furnaces. It will be apparent, therefore, that the metal from the tilting furnaces must have sufficient superheat for preventing solidification of the metal in the ladle during the time interval between the filling of the ladle and the introduction of the metal from the ladle into the casting furnaces. The ladle is tilted by any convenient mechanism, such as that illustrated by a hydraulic ram 40, for example.

The metal discharges from the ladle G into the charge port 42 of the respective casting furnaces K. In view of the fact that the metal in the casting furnaces is to be supplied to the casting die in deoxidized condition, it is important to maintain a non-oxidizing atmosphere in the furnace, and to seal the furnace against intake of air.

Fig. 2 shows, rather diagrammatically, a suitable construction of the casting furnaces. It will be seen that the furnace comprises the lower portion 44 and a top 46, the top and bottom portions being sealed together by means of a suitable seal designated at 48. This seal may be of any suitable construction.

The hearth of the furnace is located in the bottom portion 44, and in view of the protection against oxidation and to insure the maintenance of substantially oxygen-free metal at the casting dies, the metal-containing hearth of the furnaces 44 may be lined with graphite or other suitable carbonaceous material, such as that which is designated at 50. This hearth is divided by a partition 52, thereby dividing the hearth into two compartments, compartment 54 being the metal-receiving compartment, and compartment 56 being the casting compartment. Port 58 through the bottom of the partition member 52 permits metal to flow from the compartment 54 into the die compartment 56. The partition member 52 is also made out of graphite or other carbonaceous material. It will be seen, additionally, that the intake port 42 is provided with a graphite liner, which conveniently may be a graphite or carbon pipe inserted through the

furnace wall and discharging onto the hearth 54.

Casting die 60 communicates with the interior of the casting compartment 56, the die 60 being composed preferably of hard, dense graphite. It will be seen from this description that the molten metal is subjected entirely to carbon surfaces from the time it leaves the ladle until it becomes solidified in the die; and this contact with carbon assures a complete deoxidation of the metal by the time it reaches the casting die. The casting furnaces K are heated in each instance by a suitable means, such as, preferably, graphite resistors.

The casting die is composed of two sections, the solidifying section 60, which is a relatively short section and a relatively long auxiliary section 64, which serves to condition the cast metal after solidification thereof.

The die section 60 is enclosed in a cooling jacket 66, which may be rendered adjustable so as to enable the water jacket 66 to be shifted relative to the die section 60 when occasion for such adjustment arises. An adjustable collar 68 may also be provided, for supporting a plurality of cooling jackets 70. Consequently, all of the water jackets above the collar 68 are adjustable relative to the rod and to the casting die.

Adjustment is effected by the provision of suitable connecting rods 72 which operate on a screw shaft 74, the shaft 74 operating through the medium of a pair of intermeshing bevel gears 76 and 78, which may be turned by any suitable tool, such as a handle or crank not shown.

Engaging the screw shaft 74 is a connector 80, this connector comprising a sleeve which suitably rides on guide shafts 196, as will be apparent from Figs. 2, 3, 4 and 5 for example. This mechanism renders the entire series of cooling means adjustable with respect to the die and the rod being cast. The bottom water jackets 82 rest upon a flange 84 on a sleeve 85, which is suitably supported in a stud 86, the sleeve 85 being of sufficient diameter to enable the cast rod to pass freely through it.

The collar 68 is similarly adjustably supported by arms 88 which are welded, or otherwise united to a movable sleeve member 202 which operates along a second screw shaft 92, which shaft is actuated by bevel gears 94 and 96 in a manner similar to that described above.

It is thought that this construction will be clear from Fig. 3.

The rod is withdrawn from the die by a mechanism including cooperating power actuated feed rolls 98, 98' and 100, 100', these rolls engaging the rod on both sides and at a plurality of stations along the rod so as to maintain the rod rigidly supported in true alignment with the die. These rollers desirably are yieldably mounted so as to become self-accommodating to varying diameters of the rod. They are driven by suitable power transmitting instrumentalities, not shown, which take power from a suitable source thereof.

Disposed in the path of travel of the cast rod is a power actuated saw 102, which is carried by a housing 104 which is vertically movable on supporting standards 106, 108, so that the saw blade will travel with the rod that is being sawed in conformity with the rate of withdrawal of the rod, so as to complete the sawing operation without any interference with the withdrawing of the rod. When the resulting billet has been cut, suitable hydraulic mechanism, the details of which are not shown herein, returns the saw and housing to the original position at the start of the cut.

As each billet, as indicated at 109, is severed, it drops into guiding instrumentalities, indicated at 110, by which the billets are guided onto the conveyor M, which conveys the billets to the cupping machine, as mentioned above. Conveyor M may comprise an endless conveyor belt 112 operating in frame 114, the return of the conveyor being conveniently positioned below the floor level, as in pit 116.

The details of this guiding mechanism for the billets is shown in detail in Figs. 6 to 8 inclusive.

This guiding mechanism comprises, specifically, a channel member 118 to one side of which is welded a plate 120 which is curved as shown in Fig. 7 so as to extend over the opening of the channel, as is shown in Fig. 7, so as to leave a sufficient space 122 for receiving the billet between the channel member 118 and the plate 120, the plate 120 retaining the billet so as to prevent its falling out from the guiding mechanism until the latter assumes discharging position as will be described in detail hereinafter. This guiding mechanism is held releasably in vertical position so as to catch the billets as they drop from the saw, the space 122 therefore being in alignment with the path of movement of the billet. A round bar 124 is suitably flattened adjacent to one end as indicated at 126, for close engagement with the channel 118, and is secured to the channel at its flattened portion by bolts 128.

The bar 124 is rotatably mounted in bearings 130 and 132, to which are secured angles 134 and 136, respectively, the angle 134 being in turn welded to frame 138 of the conveyor M, and angle 136 being welded to suitable standards of the supporting frame-work for the casting furnaces, to which standards also is welded an additional angle support 140. The channel 118 and its plate 120 consequently are turnably mounted with the bar 124, being held against slipping on its shaft 124 by set collars 135 and 137, and remain normally in approximately vertical position because of the shaft 124 being mounted somewhat above the horizontal center line of the channel and its plate, so that stable equilibrium of this assembly is in its substantially vertical position for receiving the billets. The channel 118 and its plate 120 are releasably held in billet receiving position by a latching mechanism which is illustrated in Figs. 6 and 8.

This latching mechanism comprises a base plate 142 having adjacent to one end an internally threaded stud 144 thereon which receives a screw bolt 146 which is adjustable as to height in the stud 144. An upright pin 148 serves as a retaining guide for a compression spring 150, which bears against the underside of a locking plate 152 which is pivotally mounted on a shaft 154 bearing in side plates 156, 158 and held in position by suitable lock nuts. The pivot shaft 154 is offset from the center of the plate 152 so that the latter normally rests in horizontal position with the head 164 of the adjusting screw 146 serving as supporting abutment for the plate 152 beneath one end of the plate, the opposite end of the plate 152 resting upon the spring 150. A lug 166 is provided on the plate 152 and there is also an abutment 168 at the end of the plate 152 which serves as a latch to normally hold the channel 118 in upright position to receive the billets.

When a billet is sawed off and drops into the channel 118, it falls, guided by the channel 118 and plate 120, until it strikes against the lug 166. The weight of the billet and the force of impact against the lug, causes the plate 152 to pivot upon shaft 154 until the lug 168 disengages from the channel 118 to release the latter, which then tips under the action of the billets to cause the billets to roll out through the space 122 onto a plate 170 which leads to the conveyor belt 112, down which plate the billet rolls to the conveyor belt.

The base plate 142 is bolted to the concrete floor of the casting pit so as to render the said mechanism fixed with respect to the billet guiding means, the base plate being secured directly to a concrete, or the like, cushion 174.

It is desirable to prevent an excessive number of billets reaching the conveyor and accumulating at the cupping or scalping machines. In order to facilitate a regular control of feed of the billets to the conveyor, there may be interposed between the plate 170 and the conveyor 112 at each of the casting stations disposed along the conveyor, feeding devices for the billets, which comprise, at each station, a pair of rotatable cam members, the surfaces of which are provided with corresponding grooves in which one billet at a time is adapted to be received and deposited upon the conveyor, the remaining billets, which may be discharged by the guiding mechanism, previously described, onto the plate being held back during the rotation of the cam, so that only one billet at a time will be deposited upon the conveyor; and since the rotating cam discs at each casting station are offset with respect to the remaining members, it follows that the billets will be distributed along the conveyor in such a way that they will reach the cupping machine at such intervals that the operations upon one of the billets will be completed before the next succeeding billet arrives at the machine.

Referring to this mechanism, which is shown in detail in Figs. 6 and 7, it will be seen that there is provided a drive shaft 176 which is common to each of the casting stations. Each of the plates 170 upon which the billets 172 are deposited by the billet-guiding mechanism is provided with two slits 178 and 180, through which operate the cam members 182, which are rotatably mounted upon the shaft 176, and which are provided with peripheral, arcuate grooves 184, the curvature of which groove in each case is substantially the same as the circumferential curvature of the billet, the result being that with each rotation of the cams 182, a billet will be picked up in the corresponding grooves 184 of the respective pairs of cam members, and this billet will be deposited upon the conveyor 112 while the remaining billets upon the plates 170 are held back by the uninterrupted portion of the surfaces of the cams.

The common drive shaft 176 is operated by a suitable source of power, such as a motor 186 in Fig. 9, which drives the shaft by means of a belt 188 which passes around a pulley 190 mounted on the shaft 176, and also around a pulley 192 on speed reducing mechanism 194. Obviously, the grooves 184 on each pair of cams are in alignment in order to receive the billets 172 successively, as has been described above, and deposits these billets lengthways upon the conveyor belt 112, but the grooves of each pair of cams are offset with respect to the grooves of every other pair, so that the billets will be deposited upon the conveyor in a timed relation which obviates any tendency of excessive piling of the billets upon the conveyor, and at the same time delivers these billets at suitable intervals to the cupping machine.

Reference may now be had to Figs. 3, 4 and 5, which show full details of the mounting of the adjustment instrumentalities for the water jackets. In practice it is found that in starting up the casting operations it is desirable to have the water jackets lowered relative to the dies as far as possible, so that the cooling zone of the metal in the dies will be, initially, somewhere toward the outlet of the die; the water jacket being raised relatively to the die as the casting speed is increased, so as to shorten the freezing zone, it being apparent, of course, that when the casting operation is first started, the relatively long cooling zone results from the initial slow speed, and that as the cast-rate is increased, the freezing zone becomes shorter, so that in order to correspond to this variation in casting speeds, in order to assure an efficient cooling, it is necessary to provide means for evenly raising the water jacket around the die. Consequently, there are provided the supporting arms and the screw shaft referred to above, together with the internally threaded connection or bracket which rides on the screw shaft and which carries the arms on which the water jacket is mounted. It is obvious, also that the movement of the water jacket shall be entirely parallel with the die, so that there will be no tendency of the water jacket to bind against the die during the adjustment. Consequently, supports additional to those afforded by the screw shafts are provided, these supports being indicated by the standards 196 and 198 as shown on Figs. 3, 4 and 5. These standards have smooth surfaces, and collars 200 and 202 ride thereon, these collars being specifically a portion of the brackets which are mounted on the screw shafts 80 and 90, as illustrated in Figs. 2 and 3, the collar 200 carrying directly the arms 72 for the upper water jacket, and the collar 202 directly carrying the arm 88 of the collar 68 upon which are supported the water jackets of the upper section of the cooling system. These water jackets are indicated by numeral 70 as have been described above, it being found in practice to employ split jackets which may be simply placed around the billet as the latter is being withdrawn, the number of such jackets being increased as the casting speed is increased.

What is claimed is:

1. Apparatus for producing metallic billets by continuous casting comprising, in combination, a plurality of casting furnaces located at a multiple of operating stations for continuously casting the metal, mechanism for machining the cast billets, a melting furnace for melting metal to be cast, a second furnace for receiving metal from the melting furnace and for holding a supply of the metal in molten and refined condition for introduction into the casting furnaces, means for transferring metal from the holding furnace to any selected casting furnace for replenishing the supply of metal in the casting furnaces as the supply of metal in the casting furnaces becomes depleted, means for continuously withdrawing solidified cast metal from the casting furnaces, instrumentalities for cutting the cast metal into successive billets, conveying mechanism for conveying the billets to the said machining mechanism, and means for supplying billets at a predetermined rate to the conveying mechanism for

preventing overcrowding of the billets at the machining mechanism.

2. Apparatus for producing metallic billets by continuous casting comprising, in combination, a plurality of casting furnaces located at a multiple of operating stations for continuously casting the metal, mechanism for machining the cast billets, a melting furnace for melting metal to be cast, a second furnace for receiving metal from the melting furnace and for holding a supply of the metal in molten and refined condition for introduction into the casting furnaces, means for transferring metal from the holding furnace to any selected casting furnace for replenishing the supply of metal in the casting furnaces, instrumentalities for cutting the cast metal into successive billets, conveying mechanism for conveying the billets to the said machining mechanism, and means for receiving the said billets from the said cutting instrumentalities and for guiding the said billets to the conveying mechanism.

3. Apparatus for producing metallic billets by continuous casting comprising the combination with a continuous casting furnace, of means for continuously withdrawing cast metal from the furnace, means for severing the cast metal into successive billets as the said metal is withdrawn from the furnace, means for conveying the severed billets from the location of the furnace, and guide means for receiving the billets as severed by the severing means and guiding the said billets to the said conveying means.

4. Apparatus for producing metallic billets by continuous casting comprising the combination with a continuous casting furnace, of means for continuously withdrawing cast metal from the furnace, means for converting the cast metal into billets, means for conveying the billets from the location of the furnace, and billet receiving means for receiving the said billets from the conveying mechanism, the said means being adapted to pass from billet-receiving position to discharging position responsively to receiving a billet from the said converting means for discharging the said billet from the billet-receiving means.

5. Apparatus for producing metallic billets comprising the combination with billet casting instrumentalities, of means for receiving the billets from the casting instrumentalities, mounting mechanism for the receiving means for enabling the receiving means to shift from receiving to discharging positions responsively to entry of a billet into the said receiving means and to return to billet receiving position incident to discharge of the billet from the said means, and mechanism for releasably holding the said receiving means in billet receiving position.

6. Apparatus for producing and handling metallic billets comprising the combination with billet casting instrumentalities, of means for receiving the billets and for transferring the said billets from the casting instrumentalities to a predetermined discharge position responsively to reception of a billet into the said means, devices for enabling the said means to turn from billet receiving to billet discharging position responsively to reception of a billet into the said means, and back again into receiving position when the billet is discharged, and releasable latching mechanism for the said means operable responsively to reception of the billet in the said means to release the latter, and automatically latching the said means incident to return thereof to latching position.

7. Apparatus for producing and handling metallic billets comprising the combination with billet casting instrumentalities, of means for receiving the billets from the casting instrumentalities and shifting the same to a predetermined discharge position responsively to entrance of a billet into the said means, and mounting devices for the said means positioned on the said means whereby the said means become overbalanced upon reception of a billet therein to discharge the billet and are self-returnable to billet receiving position when the said billet is discharged from the said means.

8. Apparatus for producing and handling metallic billets comprising the combination with billet casting instrumentalities, of means for receiving the billets from the casting instrumentalities and shifting the same to a predetermined discharge position responsively to entrance of a billet into the said means, the said means comprising a frame into which a billet is adapted to be received, mounting means for the frame positioned relatively to the frame so that the frame is in stable equilibrium when empty but becomes overbalanced when a billet is received therein, and releasable latching instrumentalities for the frame operable responsively to a billet entering the frame for releasing the frame, thereby enabling the frame to turn upon its mounting means to dump the billet therefrom, the said latching mechanism automatically re-latching the frame upon return of the frame to billet receiving position.

9. Apparatus for producing and handling metallic billets by continuous casting comprising, in combination, a continuous casting furnace for casting the metal, means associated with the furnace for cutting the metal into billets, conveyor mechanism for removing the billets from the furnace, and turnably mounted means adjacent to the cutting means for receiving the billets as severed from the casting and for directing the billets upon the conveying mechanism responsively to turning the said means into billet discharging position.

10. Apparatus for producing and handling metallic billets by continuous casting comprising, in combination, a continuous casting furnace for casting the metal, means associated with the furnace for cutting the metal into billets, conveyor mechanism for removing the billets from the furnace, turnably mounted guide means adjacent to the cutting means for receiving the billets as severed from the casting and for directing the billets upon the conveying mechanism responsively to turning of the said means into billet discharging position, and feeding mechanism intermediate the said turnably mounted guide means and the conveyor for supplying billets to the conveyor at predetermined timed intervals.

11. Apparatus for producing and handling metallic billets by continuous casting comprising, in combination, a plurality of continuous casting furnaces for casting the metal, and defining a plurality of operating stations, means associated with the furnaces for cutting the metal into billets, conveyor mechanism for removing the billets from the locations of the furnaces, turnably mounted guide means adjacent to the cutting means for receiving the billets as severed from the casting furnaces and for directing the billets upon the conveying mechanism responsively to turning of the said means into billet discharging position, and feeding mechanism common to the operating stations and positioned in-

termediate the turnably mounted guide means and the conveyor, the said feeding mechanism including means for feeding the billets at each station to the conveyor in predetermined staggered time intervals.

12. Apparatus for producing and handling metallic billets by continuous casting comprising, in combination, a plurality of continuous casting furnaces for casting the metal, and defining a plurality of operating stations, means associated with the furnaces for cutting the metal into billets, conveyor mechanism for removing the billets from the locations of the furnaces, turnably mounted guide means adjacent to the cutting means for receiving the billets as severed from the casting furnaces, and for directing the billets upon the conveying mechanism responsively to turning of the said means into billet discharging position, and feeding mechanism common to the operating stations and positioned intermediate the turnably mounted guide means and the conveyor, the said feeding mechanism including a drive shaft, a plurality of pairs of cams on the said shaft, there being a pair of cams at each station having corresponding billet pick-up means, the said pick-up means of each pair of cams being staggered with respect to the remaining pairs of cams.

13. Apparatus for producing metallic billets by continuous casting comprising, in combination, a plurality of casting furnaces located at a multiple of operating stations for continuously casting the metal, means for continuously withdrawing solidified cast metal from the casting furnaces, instrumentalities for cutting the cast metal into billets, mechanism for machining the cast billets, conveying mechanism for conveying the billets from the said operating stations to the said machining mechanism, turnably mounted guide means for receiving the billets directly from the cutting instrumentalities and for discharging the said billets substantially lengthways relative to the conveyor, and feeding mechanism common to the operating stations and positioned intermediate the turnably mounted guide means and the conveyor, the said mechanism including a drive shaft, and cam devices on the drive shaft at each station, the cam devices being provided with peripheral recesses adapted to engage the billets and to pick-up and deposit the billets successively upon the conveyor.

14. Apparatus for producing and handling metallic billets by continuous casting comprising, in combination, means for continuously transforming molten metal into a solid rod of predetermined diameter, instrumentalities for cutting the rod as it is produced into billets of predetermined length, conveyor mechanism for receiving the billets and taking them to a selected station, and means for directly receiving the billets from the cutting instrumentalities and transferring the billets to the conveying mechanism.

15. Apparatus according to claim 14 wherein the billet-receiving means is self-shiftable between billet-receiving and billet-discharging positions.

16. Apparatus for producing metallic billets comprising the combination with billet casting instrumentalities, of means for directly receiving the billets from the casting instrumentalities, the said means being automatically operable between billet-receiving and billet-discharging positions responsively to receiving a billet and to discharging the billet, respectively.

17. Apparatus for producing metallic billets comprising the combination with billet casting instrumentalities, of means for directly receiving the billets from the casting instrumentalities, the said means being adapted to pass from billet-receiving position to billet-discharging position responsively to receiving a billet from the casting instrumentalities thereby delivering the billets to a predetermined discharge station.

18. Apparatus for producing metallic billets comprising the combination with billet casting instrumentalities, of receiving means for receiving the billets from the casting instrumentalities, the said means being shiftable between stable and unstable equilibrium responsively to receiving and discharging billets therefrom.

19. Apparatus for producing metallic billets comprising the combination with billet casting instrumentalities, of a cage for receiving the billets from the casting instrumentalities, the said cage being automatically self-shiftable between stable and unstable equilibrium responsively to receiving and discharging billets therefrom, and holding means for holding the cage in stable equilibrium during intervals when the cage is empty, the said holding means being released automatically responsively to a billet entering the cage.

20. Apparatus for producing and handling metallic billets by continuous casting comprising, in combination, means for continuously transforming molten metal into a solid rod of predetermined diameter, instrumentalities for cutting the rod as it is produced into billets of predetermined length, conveyor mechanism for receiving the billet, and taking them to a selected station, and transfer means for receiving the billets from the cutting instrumentalities and transferring the said billets onto the conveyor at a predetermined rate.

21. Apparatus for producing and handling metallic billets comprising, in combination, mechanism for transforming molten metal into billets, metal-working means, conveyor mechanism for conveying the billets from the billet-forming mechanism to the metal-working means, and guide means for receiving the billets and guiding them onto the conveyor at a predetermined rate adjusted to prevent overcrowding of the billets at the metal-working means.

KARL A. LINDNER.
BARTEL DI SANTO.