Mar. 27, 1923.

1,449,750.

H. F. HAMPSHIRE ET AL.

RECEPTACLE FOR PRINTING PRESSES.

ORIGINAL FILED DEC. 24, 1920.

Fig. 1.

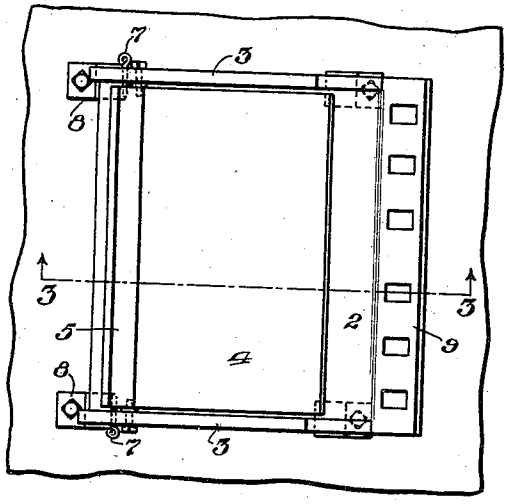

Fig. 3.

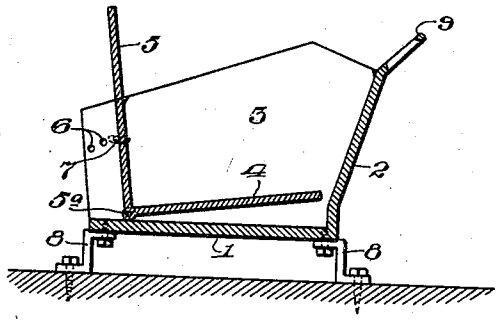

Fig. 2.

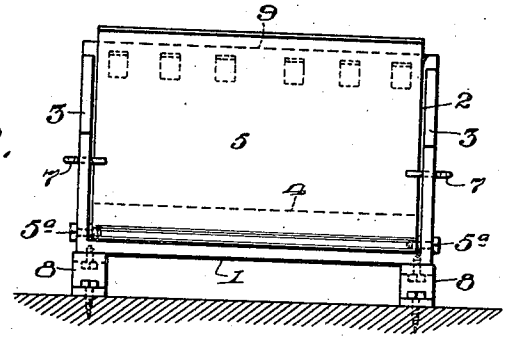

INVENTORS
Harry F. Hampshire &
Frank B. Cranmer.

BY
J. Stuart Freeman,
ATTORNEY

WITNESSES:
F. J. Hartman.
M. T. Cranmer

Patented Mar. 27, 1923. 1,449,750

UNITED STATES PATENT OFFICE.

HARRY F. HAMPSHIRE, OF PHILADELPHIA, PENNSYLVANIA, AND FRANK B. CRANMER, OF LOS ANGELES, CALIFORNIA, ASSIGNORS TO THOMSON PRINTING COMPANY, A CORPORATION OF NEW JERSEY.

RECEPTACLE FOR PRINTING PRESSES.

Original application filed December 24, 1920, Serial No. 433,014. Divided and this application filed August 9, 1921. Serial No. 490,924.

To all whom it may concern:

Be it known that we, HARRY F. HAMPSHIRE and FRANK B. CRANMER, citizens of the United States, residing, respectively, at Philadelphia, Philadelphia County, Pennsylvania, and Los Angeles, Los Angeles County, California, have invented certain new and useful Improvements in Receptacles for Printing Presses, of which the following is a specification.

The object of this invention is to provide an improved receptacle particularly adapted to be used in association with a delivery mechanism for receiving printed sheets or similar matter from any desired form of printing-presses.

In the printing art, the sheets, leaflets, booklets, and the like, having received ink-impressions in a printing press of whatever character may be available, are delivered either directly therefrom or through the aid of a special delivery mechanism, such for instance as that shown in applicants' co-pending application Serial No. 433,014, and of which this application comprises a division, and by which delivery mechanism printed articles are adapted to be delivered directed into the improved receptacle.

Another object is to provide a receptacle having a bottom and an upwardly extending side member unitarily connected, and adapted to be tilted into any desired angular adjustment for purposes which will hereinafter appear.

With these and other objects in view, the present invention comprises further novel details of construction and operation fully brought out in the following description when read in conjunction with the accompanying drawing, in which Fig. 1 is a top plan view of the improved receiving-receptacle in its preferred embodiment; Fig. 2 is a front elevation of the same; and Fig. 3 is a vertical section on the line 3—3 of Fig. 1.

Referring to the drawings, the receptacle comprising the present invention is composed of a substantially horizontally extending bottom wall 1, from one edge portion of which extends upwardly, and preferably slightly outwardly, a wall 2, which is adapted to be positioned closely adjacent to the delivery mechanism of a printing-press, or in fact any other type of mechanism with which the improved device is adapted to be used.

The side walls 1 and 2 are connected by upwardly extending preferably parallel walls 3, which may be of any desired shape and upward extent, the same serving as lateral supports for the wall 2 and also as an aligning guide for assisting in the even piling of articles being caught between them, particularly when the articles being received are of a width substantially equal to the distance between the said side walls.

The side of the receptacle opposite to the upwardly extending wall 2 is preferably opened, but extending across the lower portion thereof between the side walls 3 is an angularly shaped member comprising a false bottom 4 and a normally upwardly extending plane member 5, which is preferably rigidly secured to move in exact unison and constant angular relation with the said false bottom 4.

The side walls 3 are provided with suitable means whereby co-operation with the member 5 either directly or indirectly retains the latter in a given angular position as illustrated in Fig. 3, and in the preferred embodiment of the invention the said retaining means may comprise spaced apertures 6 in the side walls 3, through which suitable pins 7 may be extended in order to engage and adjustably position the said member 5 and false bottom 4 unitarily associated therewith.

This receptacle may be supported in any desired manner either directly upon the same floor or other foundation with a printing-press delivery mechanism or other device, or the same may be raised in order to assume any desired elevation by means of legs or brackets 8. The receptacle as a whole is then positioned adjacent to such a mechanism as those referred to, so that printed sheets or other articles entering thereinto pass over the upper limit of the wall 2 and fall by gravity between the side walls 3 and upon the false bottom 4, which latter obviously may be in a horizontal position.

However, if the said false bottom slants in such a manner as is shown in Fig. 3, the said printed sheets will then continue over the same until each successive sheet inwardly

engages and its motion is arrested by the plane member 5, with the result that the sheets are stacked upon said false bottom with their forward edges even, and from which position successive piles may be manually removed whenever and as may be desired. The removal of articles from the improved receptacle may often be facilitated by tilting the false bottom and forward side wall connected therewith outwardly, after which this structure may be reset at any desired angular relation by adjusting the pins 7 within the apertures 6.

Having thus described our invention, what we claim and desire to protect by Letters Patent of the United States is:—

1. A receptacle, comprising the combination, of oppositely positioned end walls, and bottom and rear walls connecting said end walls, with a tray pivotally supported between said end walls and comprising a false bottom and a front wall for said receptacle, adapted to move as a unit to discharge a pile of printed sheets from said receptacle, and means to adjustably position said tray angularly with respect to its pivotal support.

2. A receptacle, comprising the combination of oppositely positioned walls, a tray comprising a bottom and a side wall pivotally supported by said first-named walls, and means to adjustably retain said tray in different predetermined positions with respect to said first-named walls.

3. A receptacle, comprising the combination of a supporting member, a tray comprising angularly disposed walls unitarily connected, means connected with said supporting member to pivotally support said tray with relation thereto, and means to adjustably retain said tray in any predetermined position angularly with respect to said supporting member.

In testimony whereof we have affixed our signatures.

HARRY F. HAMPSHIRE.
FRANK B. CRANMER.