J. E. SHERIFF.

MAGNETO.

APPLICATION FILED NOV. 27, 1914.

1,162,521.

Patented Nov. 30, 1915.

4 SHEETS—SHEET 1.

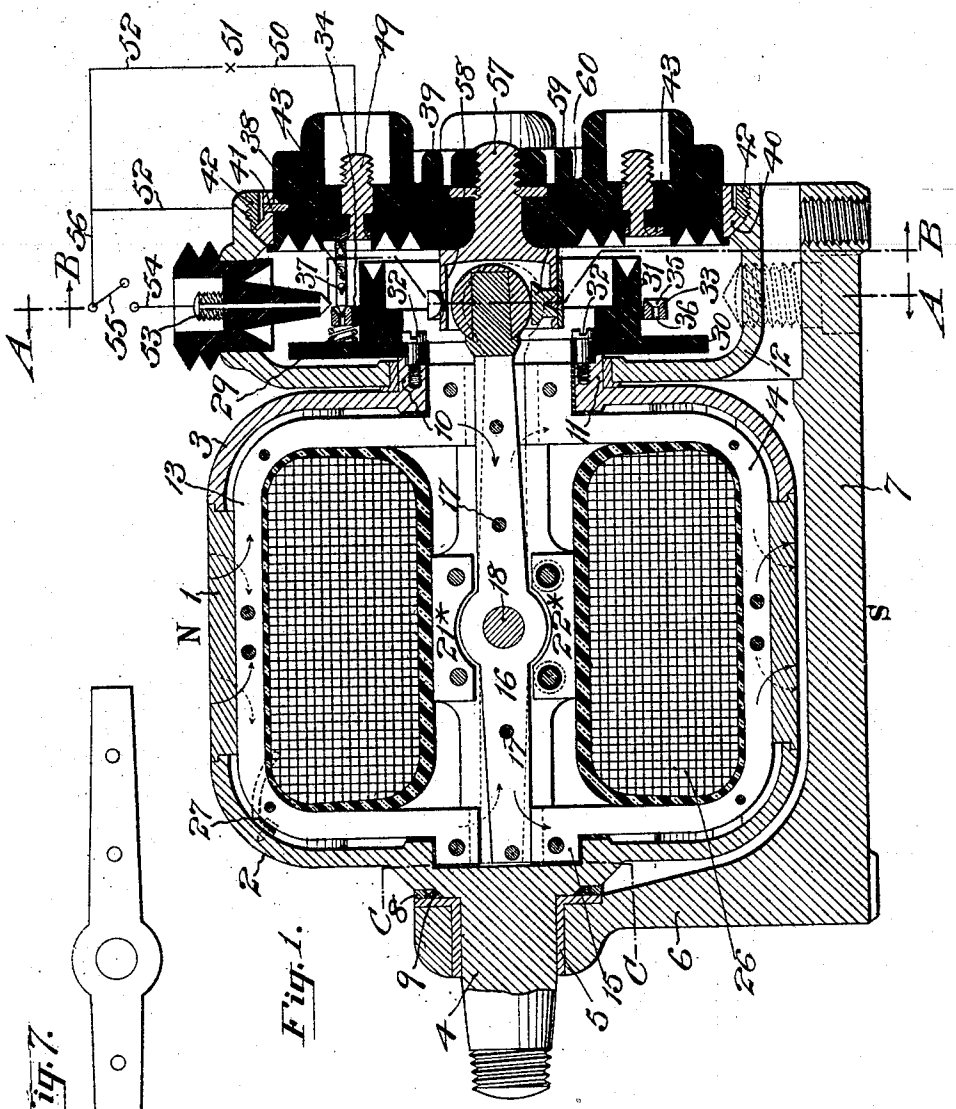

Fig. 1.

Fig. 7.

Witnesses:-
Hyperion Barry.
F. George Barry

Inventor:
J. E. Sheriff
by his attorneys
Brown & Seward

NORRIS PETERS, INC. LITHO. WASHINGTON, D. C.

J. E. SHERIFF.

MAGNETO.

APPLICATION FILED NOV. 27, 1914.

1,162,521.

Patented Nov. 30, 1915.

4 SHEETS—SHEET 2.

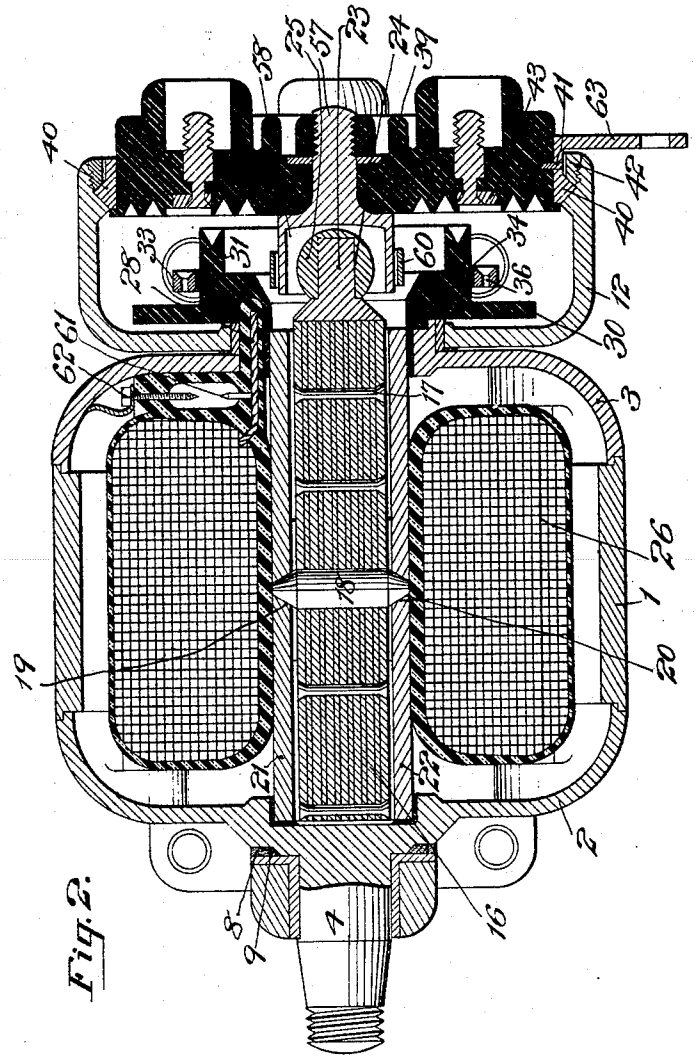

Fig. 2.

Witnesses:-
Hyperion Barry
F. George Barry

Inventor:-
J. Ed. Sheriff
by his attorneys
Brown & Ward

NORRIS PETERS, INC. LITHO., WASHINGTON, D. C.

J. E. SHERIFF.

MAGNETO.

APPLICATION FILED NOV. 27, 1914.

1,162,521.

Patented Nov. 30, 1915.

4 SHEETS—SHEET 3.

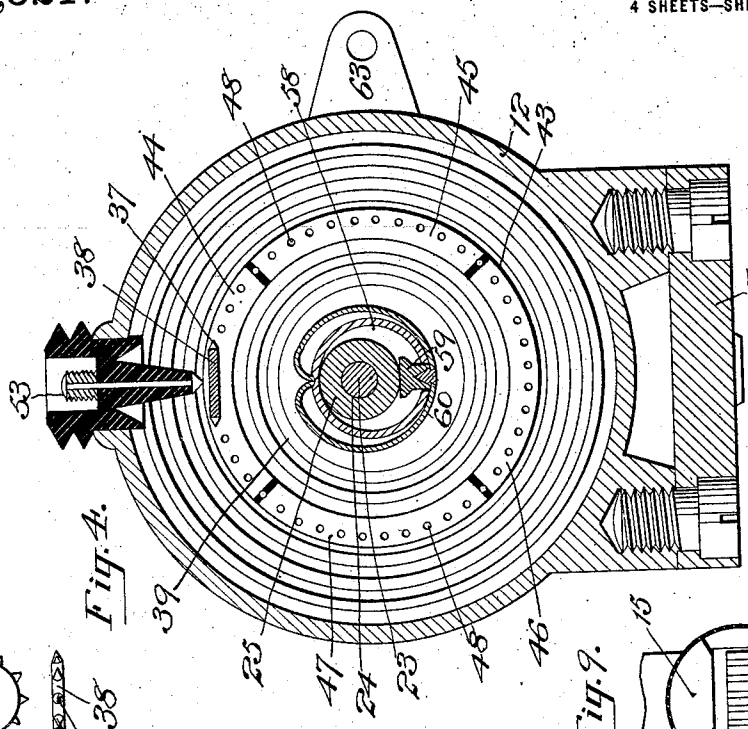

Fig. 4.



Fig. 8.

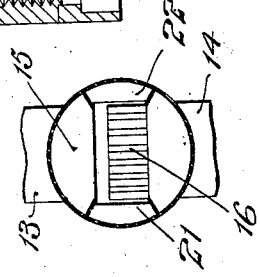

Fig. 9.

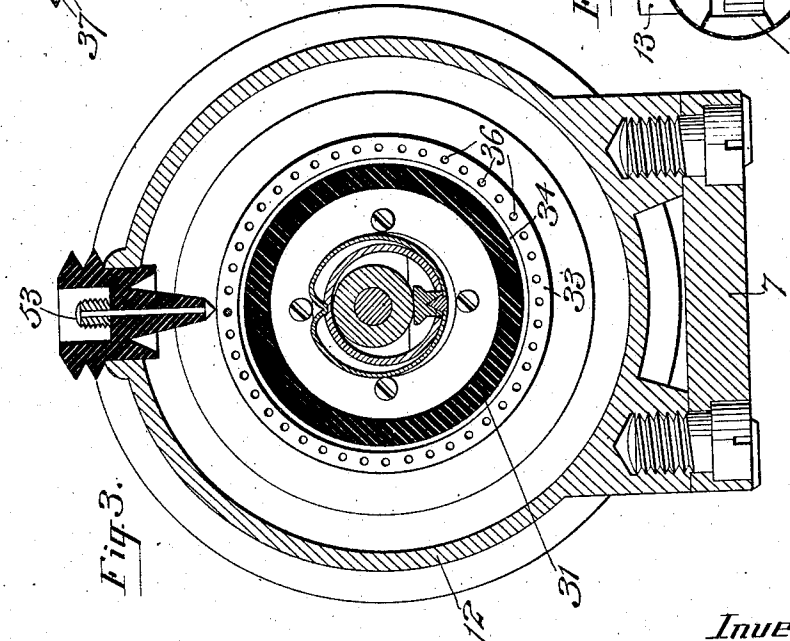

Fig. 3.

Witnesses:-

Hyperion Barry

F. George Barry

Inventor:

J. E. Sheriff

by his attorneys

Brown & Lewis

NORRIS PETERS, INC., LITHO., WASHINGTON, D. C.

J. E. SHERIFF.

MAGNETO.

APPLICATION FILED NOV. 27, 1914.

1,162,521.

Patented Nov. 30, 1915.

4 SHEETS—SHEET 4.

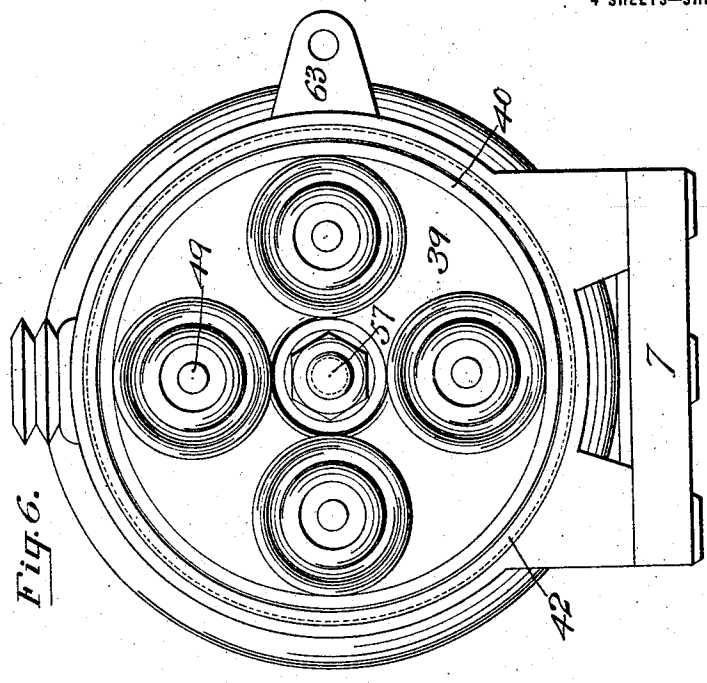

Fig. 6.

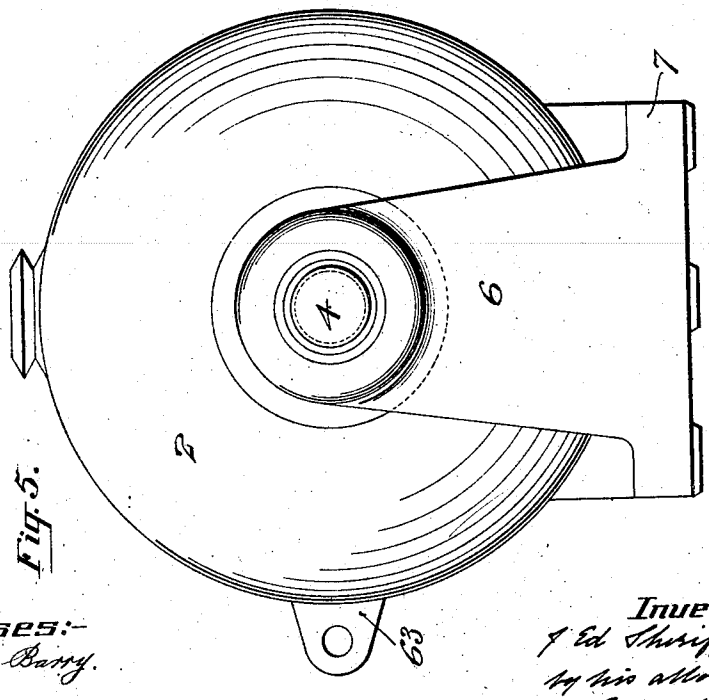

Fig. 5.

Witnesses:-
Hyperion Barry.
F. George Barry

Inventor:-
J. Ed. Sheriff
by his attorneys
Brownell & Ward

UNITED STATES PATENT OFFICE.

J ED SHERIFF, OF UNION HILL, NEW JERSEY, ASSIGNOR TO JOKICHI TAKAMINE, OF NEW YORK, N. Y.

MAGNETO.

1,162,521. Specification of Letters Patent. Patented Nov. 30, 1915.

Application filed November 27, 1914. Serial No. 874,239.

To all whom it may concern:

Be it known that I, J ED SHERIFF, a citizen of the United States, and resident of Union Hill, in the county of Hudson and State of New Jersey, have invented a new and useful Improvement in Magnetos, of which the following is a specification.

My invention relates to a magneto, and more particularly to a magneto adapted for use in connection with an explosive engine to explode the charges of compressed gas in the cylinder.

The object is to provide a magneto which will produce a spark of the same density, whatever be the speed with which the magneto is rotated.

A further object is to provide a magneto in which the spark may be advanced or retarded any number of degrees; and a still further object is to provide a magneto which shall produce a spark of longer duration.

A practical embodiment of the invention is represented in the accompanying drawings in which,

Figure 1 is a central section through the magneto, the plane passing through the north and south poles of the permanent ring magnet, showing by means of arrows, the flow of the magnetic current when the parts are in the position shown by full lines and by means of dotted arrows the flow of the magnetic current when the parts are in the position shown by dotted lines, to wit: a half revolution from the position shown in full lines. Fig. 2 is a central longitudinal section in a plane at right angles to the plane in which Fig. 1 is taken. Fig. 3 is a transverse section in the plane of the line A—A of Fig. 1, looking toward the left as the drawing is held. Fig. 4 is a transverse section in the plane of the line B—B of Fig. 1, looking toward the right as the drawing is held. Figs. 5 and 6 are views of opposite ends in elevation. Fig. 7 is a view in detail in side elevation, of one of the lamina of which the armature is composed. Fig. 8 is a view in detail in side elevation and edge elevation, of the toothed wheel for transmitting current from the coil to the segments, and Fig. 9 is a view in detail showing in end elevation, the armature, the ends of the pole pieces, the plates at the opposite sides of the armature in which the armature is mounted, and showing the insulation around the ends of the pole pieces in section, the view being taken in the plane of the line C—C of Fig. 1.

A permanent magnet in the form of a ring is represented by 1. It is supported at its opposite ends by caps of non-magnetic material, denoted respectively by 2 and 3. One of these caps, in the present instance, the cap 2, is provided with a trunnion 4, which rotates in a bearing 5, in an upright arm 6 of the supporting frame 7. A split ring 8, serves to hold a ring of wire gauze 9 in position between the flange of the bearing 5 and the hub of the cap 2. The trunnion 4 may be connected with the engine shaft, not shown, in any well known or approved manner, for causing the magneto to rotate in harmony with the engine shaft. The cap 3 at the opposite end of the permanent magnet 1, is provided with a hollow hub 10, which rotates in a suitable bearing 11, in the inner wall of a cup-shaped portion 12, of an end frame fixed to and extending at right angles from the base frame 7.

U-shaped pole pieces 13 and 14 are attached at their middle portions, the one to the north pole of the permanent magnet 1, and the other to the south pole of the permanent magnet, the branches of said U-shaped pole pieces extending toward one another and terminating, as clearly shown in Fig. 1, a distance apart sufficient to permit the opposite ends of the armature to vibrate a predetermined distance between them. At their extreme ends, the branches of the pole pieces extend a short distance outwardly, as shown at 15, the shape of said ends being shown clearly in Fig. 9. These ends of the pole pieces are insulated from the non-magnetic caps 2 and 3.

The vibrating or rocking armature is denoted as a whole by 16. It is of laminated construction, the different laminæ being held in juxtaposition by means of transverse rivets 17. A spindle 18 extending transversely through the armature, has its opposite ends tapered as shown, and seated in tapered sockets 19, 20, in side plates 21, 22, which side plates have their ends extended into recesses in the inner ends of the hubs of the caps 2 and 3, into which recesses also the projections 15 on the branches of the pole pieces extend, the ends of the side plates

21, 22, being preferably of the shape shown in Fig. 9. These side plates, like the ends 15 of the pole pieces, are insulated from the hubs of the cap pieces. The axis of vibration of the armature 16, is transverse to and passes through the axis of rotation of the permanent magnet 1. The side plates 21, 22, are provided with inwardly projecting flanged pieces 21*, 22*, through which suitable insulated fastenings extend to hold the plates together.

At one end, the armature 16 has welded or otherwise suitably secured thereto, a connecting piece 23, which may be of steel, the neck of which connecting piece is cylindrical and enters a cylindrical socket 24 in a roller of spherical form, the said neck piece being free to rotate within the socket 24. The purpose of this roller attachment will hereinafter appear.

An annular coil 26 of fine wire surrounds the armature 16, and side plates 21, 22, and extends outwardly to the interior faces of the pole pieces 13, 14. This coil is provided on its exterior with suitable insulation. It is grounded by means of a connecting piece 27, which connects the coil with the cap 2, and the current is led therefrom at the opposite end of the coil by means of a wire 28, which passes through the insulation at the end of the coil and along within the hub of the cap 3, into electrical contact with one of the springs 29. The springs 29 are located on the face of a flange 30, on a disk of insulating material 31, the said disk being made fast to the end of the hub of the cap 3, by means of screws 32. The disk 31 has mounted thereon, in yielding adjustment, an annular rim 33 of conducting material, the said rim 33 being attached to the flange 30 of the disk of insulating material by means of springs 29, which springs permit the rim 33 to yield toward the flange 30, and tend to hold it in the desired position, the movement of the rim 33 away from the flange 30, under the pressure of the springs 29, being limited by the engagement of the springs with abutments, such as the abutment 34, shown in Fig. 1, on the disk of insulating material 31. The outer face of the rim 33 is provided with an annular groove 35, along the bottom of which at frequent intervals, there are holes 36 for the reception of the teeth 37 on a wheel 38.

In the outer edge of the rim of the cup 12, a distributer 39 of insulating material is mounted to rotate by means of a rim 40, and secured to the distributer 39, by pins 41, or other well known or approved means. One wall of the V-shaped portion of the rim 40, engages a corresponding tapered wall formed on the inner face of the rim of the cup, and the said rim 40, together with its distributer, is retained in position and lost motion taken up by means of an annular ring 42, screw threaded on its exterior and screwed into the interiorly screw-threaded outer edge of the cup 12.

On the inner face of the distributer 31, there is seated a ring 43, of conducting material, said ring 43 being subdivided into four segments denoted respectively by 44, 45, 46, 47, insulated from one another and provided with a series of holes 48, for the reception of the teeth 37 on the wheel 38; see Fig. 4. The line of holes in the segmental ring 43, is opposite the line of holes in the yielding ring 33, and the segmental ring 43 is spaced from the yielding ring 33, the diameter of the toothed wheel 38, so that as the ring 33 revolves together with the permanent magnet and the parts secured thereto, the wheel 38 will travel along the series of holes 48 in the successive segments of the segmental ring 43, the wheel 38 actually traversing a distance equal to two of the quadrant segments of the segmental ring 43, during one revolution of the permanent magnet 1. It will be understood at this point, that the subdivision of the segmental ring 43, is suitable for a four cylinder engine, each of the segments 44 to 47 inclusive, being connected with its particular cylinder in the proper order of explosion, and for this purpose, each segment is connected to the exterior of the plate 39, by a plug 49 of conducting material, which in turn is connected by a wire 50, with one terminal within the cylinder, the opposite terminal on the opposite side of the spark gap, indicated at 51, within the cylinder, being connected by a wire 52, with the cup 12, as its ground connection.

To short circuit the current, when it is desired to cut it off from the cylinders, an insulated plug 53 is set in the wall of the cup 12, its inner end projecting into as close proximity as may be to, without touching, the ring 33, as clearly shown in Fig. 1, and this plug is connected by a wire 54, with one contact piece of a switch 55, the switch being connected by a wire 56 with the ground wire 52.

For reversing the flow of the magnetic current at each half revolution of the permanent magnet 1, a plug 57 is provided, passing centrally through the plate 39, of insulating material, and provided at its inner end with a hollow cylindrical portion 58, which surrounds the roller 25, hereinabove referred to on the end of the piece 23, attached to the end of the armature 16. The said roller 25 is permitted a free movement within the cylindrical portion 58, in the direction of the vibratory movement of the armature 16. The roller 25 has engaged with one side thereof, a tappet 59, which latter is secured to a band spring 60 which surrounds the cylindrical part 58 of the plug 57, the said teat having a limited

movement back and forth through the wall of the said cylinder 57. This movement of the tappet, is not quite equal to the distance between the axis of rotation of the magnet 1, and the center of the roller 25, when the armature is in contact with two diagonally opposite branches of the pole pieces, as shown in Fig. 1. It, therefore, follows that when the armature 16 is bodily rotated, together with the magnet 1, and assuming it to be in the position shown in full lines Fig. 1, it will gradually depress the teat 59, the spring 60 yielding until the teat has reached the limit of its outward movement through the wall of the cylinder 57, and the further rotation of the magnet with the armature 16, will force apart the armature 16 and the diagonally located branches of the pole pieces with which it is in contact, and the magnet 1, having now nearly completed a half revolution, the armature will be free to vibrate into contact with the other diagonally opposite branches of the pole pieces and into this position it will be promptly thrown by the pressure of the spring-actuated tappet 59, just as soon as there is a separation between the armature and the pole pieces with which it was previously in contact. It is to be understood that the tension of the spring 60 is not quite sufficient to force a separation between the armature and the pole pieces with which it is in contact, but as soon as this separation is made, the tension of the spring will complete the vibratory movement of the armature with great promptness and the flow of the magnetism will then take place as indicated by dotted arrows, Fig. 1, viz: in a reverse direction from that in which the magnetic current flowed when the armature was in the position shown in full lines, Fig. 1. The same operation and reversal of flow of the flux or magnetism, will again take place at the next half revolution of the permanent magnet 1, and so on. A spark gap between the terminals 61 and 62, is provided for taking care of over-charge, the terminal 62 being grounded to the cap 3.

The rim 40 has attached thereto, a lever arm 63, see Fig. 2, for rotating it, and hence the segmental ring 43, and plug 57, carrying the tappet 59, to advance and retard the spark as may be desired. The rotary movement of the rim 40, and hence the segmental ring 43, is unlimited save only by the testing of the cables connected with the several plugs and provided these cables are made sufficiently slack, it may be given a complete revolution and the parts brought back into the same relation as when it started its rotary movement. The toothed wheel 38, keeps the connection at all times complete between the yielding rim 33 and the segments of the ring 43, and the yielding rim 33 is, in turn, at all times in electric connection with the coil through the wire 28, and the springs 29, which connect the said wire with the yielding rim 33.

It has been found in practice that the structure hereinabove explained produces an intense spark of long duration, this long duration of the spark being due, as applicant believes, to the fact that the magnetism produced in the coil is opposed to the magnetism in the armature at the time of the break in the metallic magnetic circuit, and this opposition is continued by the reversal of the magnetic circuit in the armature so that when the spark is produced by breaking the closed magnetic circuit through the armature, which introduces a high potential surge in the coil, the current is maintained across the spark gap after the primary jumping by the opposition of magnetisms hereinabove mentioned. Applicant further believes that in the successful ignition of compressed charges of gas in the larger cylinders in common use, there is not only ignition required, but detonation, or at least semi-detonation, and hence the value of a long continued intense spark for this purpose.

It is obvious that changes might be resorted to in the form and arrangement of the several parts without departing from the spirit and scope of my invention; hence I do not wish to limit myself strictly to the structure herein shown and described, but

What I claim is:

1. In a magneto, a permanent magnet, a coil and pole pieces mounted to rotate together and a vibrating armature mounted to rotate with the aforesaid elements and located in coöperative relation to the pole pieces.

2. In a magneto, a permanent magnet in the form of a ring, a coil of annular form located within the ring magnet, pole pieces between the coil and permanent magnet and a vibrating armature within the annular coil, the several elements being connected to rotate together.

3. In a magneto, a permanent magnet, a coil and pole pieces in fixed relation to one another and mounted to rotate and a vibrating armature having its axis of vibration transverse to and passing through the axis of rotation of the aforesaid elements.

4. In a magneto, a rotating permanent magnet and coil in fixed relation to each other, U-shaped pole pieces extending between the coil and permanent magnet with their branches directed toward the axis of rotation of the permanent magnet and a vibrating armature mounted to rotate with the permanent magnet and having its opposite ends positioned between the ends of the branches of the said pole pieces.

5. In a magneto, the combination with a rotary permanent magnet, coil and pole

pieces, of a rotary armature mounted to vibrate and mechanical means for separating the armature from its contact with the pole pieces and causing it to vibrate.

6. In a direct current high tension magneto, the combination with a rotary permanent magnet, coil, pole pieces and armature, of means for positively moving the armature and thereby reversing the flow of the magnetic current during a revolution of the magnet.

7. In a magneto, a rotating permanent magnet, a coil, pole pieces and armature, the said armature being mounted to vibrate between the pole pieces, a spring-actuated yielding piece supported independently of the rotary armature, and a piece connected with the armature and bearing on said yielding piece for separating the armature and the pole pieces with which it is in contact as the armature rotates.

8. In a magneto including a permanent magnet, a coil, pole pieces and a rotary armature mounted to vibrate between the pole pieces, a piece having a limited yielding movement under spring-tension in a direction laterally with respect to the axis of rotation of the armature and means for placing the armature under the control of the said piece having the yielding movement, for positively separating the armature and the pole pieces with which it is in contact.

9. In a magneto including a permanent magnet, coil, pole pieces and rotating armature, the said armature being mounted to vibrate between the pole pieces, a spring-actuated piece having a limited movement in a direction lateral with respect to the axis of rotation of the armature, and means for placing the rotary armature under the control of said yielding piece, the said yielding piece serving to positively separate the armature and pole pieces with which it is in contact during the rotary movement of the armature, and the said yielding piece further serving to vibrate the armature into contact with the opposite pole pieces.

10. In a magneto including a permanent magnet, coil, pole pieces and rotating armature mounted to vibrate between the pole pieces, a roller attached to one end of the armature, and a spring-actuated tappet mounted in position to engage the roller, the said tappet having a limited movement transverse to the axis of rotation of the armature of less extent than the distance between the center of said roller and the axis of rotation of the armature, whereby the said armature and the pole pieces with which it is in contact will be forced apart during the revolution of the armature.

11. In a magneto including a rotary permanent magnet, coil, pole pieces and armature, a rim in electric connection with the coil and connected to rotate with the coil, the said rim being provided with a series of perforations, a ring separated into segments insulated one from another and provided with a series of perforations corresponding to the aforesaid series of perforations in the rotary rim, a toothed wheel held in position between the rim and the ring by the engagement of its teeth in said perforations and adapted to conduct the current from the rim to the segments and means for adjusting the segments in different rotary positions.

12. In a magneto including a rotary permanent magnet, coil, pole pieces and armature, a perforated rim electrically connected with the coil and secured to rotate with the permanent magnet and coil, a perforated ring separated into insulated segments and mounted in rotary adjustment opposite the said rotary perforated rim and a toothed wheel held in position by the engagement of its teeth with the said perforated rim and ring for transmitting current successively to the segments.

13. In a magneto including a rotary permanent magnet, coil, pole pieces and armature, and a rim fixed to rotate with the magnet and coil and in electric communication with the coil, a ring separated into insulated segments and held in constant electric communication with the said rim, an annular rim insulated from said segmental ring and an annular seat in which said rim is mounted, the said rim being provided with a V-shaped external surface and the said seat being provided with a tapered surface for engaging one side of the V-shaped portion of the rim and an annular retaining ring arranged to force the rim into the desired bearing contact with its seat.

In testimony, that I claim the foregoing as my invention, I have signed my name in presence of two witnesses, this seventh day of Nov. 1914.

J ED SHERIFF.

Witnesses:
M. MODARELL,
FRANK JACOBS.