(12) INTERNATIONAL APPLICATION PUBLISHED UNDER THE PATENT COOPERATION TREATY (PCT)

(19) World Intellectual Property Organization
International Bureau

(43) International Publication Date
19 January 2017 (19.01.2017)

WIPO | PCT

(10) International Publication Number
WO 2017/009794 A1

(51) International Patent Classification:
A63B 22/04 (2006.01) *A63B 23/04* (2006.01)
A63B 22/06 (2006.01) *A63B 69/16* (2006.01)
A63B 22/08 (2006.01)

(21) International Application Number:
PCT/IB2016/054191

(22) International Filing Date:
14 July 2016 (14.07.2016)

(25) Filing Language: English

(26) Publication Language: English

(30) Priority Data:
62/231,629 13 July 2015 (13.07.2015) US
15/204,863 7 July 2016 (07.07.2016) US

(72) Inventor; and
(71) Applicant : **LALAOUA, Nabile** [US/US]; 848 N. Rainbow Blvd., Las Vegas, Nevada 89147 (US).

(74) Agent: **CHOW, Ming**; 19785 Crystal Rock Dr Ste 207, Germantown, Maryland 20874 (US).

(81) Designated States *(unless otherwise indicated, for every kind of national protection available)*: AE, AG, AL, AM, AO, AT, AU, AZ, BA, BB, BG, BH, BN, BR, BW, BY, BZ, CA, CH, CL, CN, CO, CR, CU, CZ, DE, DK, DM, DO, DZ, EC, EE, EG, ES, FI, GB, GD, GE, GH, GM, GT, HN, HR, HU, ID, IL, IN, IR, IS, JP, KE, KG, KN, KP, KR, KZ, LA, LC, LK, LR, LS, LU, LY, MA, MD, ME, MG, MK, MN, MW, MX, MY, MZ, NA, NG, NI, NO, NZ, OM, PA, PE, PG, PH, PL, PT, QA, RO, RS, RU, RW, SA, SC, SD, SE, SG, SK, SL, SM, ST, SV, SY, TH, TJ, TM, TN, TR, TT, TZ, UA, UG, US, UZ, VC, VN, ZA, ZM, ZW.

(84) Designated States *(unless otherwise indicated, for every kind of regional protection available)*: ARIPO (BW, GH, GM, KE, LR, LS, MW, MZ, NA, RW, SD, SL, ST, SZ, TZ, UG, ZM, ZW), Eurasian (AM, AZ, BY, KG, KZ, RU, TJ, TM), European (AL, AT, BE, BG, CH, CY, CZ, DE, DK, EE, ES, FI, FR, GB, GR, HR, HU, IE, IS, IT, LT, LU, LV, MC, MK, MT, NL, NO, PL, PT, RO, RS, SE, SI, SK, SM, TR), OAPI (BF, BJ, CF, CG, CI, CM, GA, GN, GQ, GW, KM, ML, MR, NE, SN, TD, TG).

Published:

— *with international search report (Art. 21(3))*

— *before the expiration of the time limit for amending the claims and to be republished in the event of receipt of amendments (Rule 48.2(h))*

[Continued on next page]

(54) Title: MULTIFUNCTIONAL EXERCISE MACHINE

FIG. 1

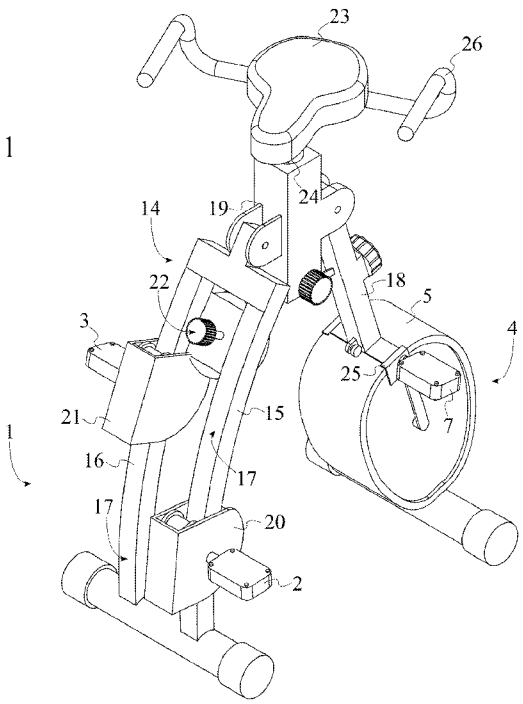

(57) Abstract: A multifunctional exercise machine is an exercise machine that combines a stepper assembly and a stationary bicycle assembly into a single machine. The stepper assembly is positioned on a frame member while the stationary bicycle assembly is positioned on a stand member. The frame member and the stand member are both hingedly connected to a bridge positioned in between the frame member and the stand member. A stepper resetting mechanism is utilized to regulate the movement of a first step pedal and a second step pedal of the stepper assembly. The first step pedal and the second step pedal are slidably engaged to a first rail and a second rail of the frame member. The machine may be utilized in a standing position or in a seated position via an adjustable seat. A handlebar assembly may be utilized for user stability while exercising.

WO 2017/009794 A1

— *with information concerning request for restoration of the right of priority in respect of one or more priority claims (Rules 26bis.3 and 48.2(b)(vii))*

Multifunctional Exercise Machine

The current application claims benefit of U.S. Provisional Patent application serial number 62/231,629 filed on July 13, 2015 and U.S. Non-Provisional Patent application serial number 15/204,863 filed on July 7, 2016.

FIELD OF THE INVENTION

The present invention relates generally to an exercise machine. More specifically, the present invention is a multifunctional exercise machine that combines the functionality of a stepping machine and a stationary bicycle.

BACKGROUND OF THE INVENTION

Stepping machines and stationary bicycles are often favored for exercise due to their safety and effectiveness in improving cardiovascular endurance as well as lower body muscle strength. Stepping machines and stationary bicycles are effective for low impact exercise due to the fact that the feet remain in contact with the steps and the pedals respectively when performing exercise. This results in less stress on the joints, muscles, and tendons. Additionally, the user's movement during exercise on a stepping machine or a stationary bicycle is fluid and continuous rather than sporadic. Stepping machines and stationary bicycles are often utilized for physical therapy and rehabilitation due to the low impact exercise provided. Stepping machines and stationary bicycles typically include a mechanism for adjusting the intensity of a workout by increasing or decreasing the resistance experienced by the user when stepping or cycling.

The present invention is a multifunctional exercise machine that combines the functionality of a stepping machine and a stationary bicycle. As such, the present

invention provides the user with multiple low impact exercise options for improving cardiovascular endurance and lower body muscle strength.

BRIEF DESCRIPTION OF THE DRAWINGS

FIG. **1** is a front perspective view of the present invention.

FIG. **2** is a rear perspective view of the present invention.

FIG. **3** is a rear view of the stepper assembly, the frame member, and corresponding components.

FIG. **4** is a top view of an embodiment of the present invention.

FIG. **5** is a front perspective view of an alternative embodiment of the present invention with a dual-sided adjustable seat.

FIG. **6** is a front perspective view of an embodiment of the present invention with an electronic monitoring device.

FIG. **7** is a front perspective view of an embodiment of the present invention with an electronic monitoring device and an adjustable seat.

DETAIL DESCRIPTIONS OF THE INVENTION

All illustrations of the drawings are for the purpose of describing selected versions of the present invention and are not intended to limit the scope of the present invention.

The present invention is a multifunctional exercise machine that provides the user with the functionality of both a stepping machine and a stationary bicycle. The present invention is shown in FIGS. **1-4** and comprises a stepper assembly **1**, a stationary bicycle assembly **4**, a stepper resetting mechanism **9**, a frame member **14**, a stand member **18**, and a bridge **19**.

The stepper assembly **1** functions similarly to a stepping machine that is utilized to improve cardiovascular endurance as well as lower body muscle strength. The stepper

assembly **1** comprises a first step pedal **2** and a second step pedal **3**. The user's feet are placed into contact with the first step pedal **2** and the second step pedal **3** during use of the stepper assembly **1**. For user safety, the first step pedal **2** and the second step pedal **3** may be covered with a rubberized coating in order to minimize slippage. The frame member **14** serves as a base for the stepper assembly **1**. The first step pedal **2** and the second step pedal **3** are slidably mounted along the frame member **14**, allowing the first step pedal **2** and the second step pedal **3** to slide along the frame member **14** when the user applies force with his or her feet. Additionally, the first step pedal **2** and the second step pedal **3** are positioned opposite to each other about the frame member **14**. The first step pedal **2** and the second step pedal **3** are thus separated by a sufficient distance such that the user may comfortably exercise utilizing the stepper assembly **1**. The stepper resetting mechanism **9** enables the first step pedal **2** and the second step pedal **3** to slide relative to each other along the frame member **14**. The stepper resetting mechanism **9** is operatively connected in between the stepper assembly **1** and the frame member **14**, securing the stepper resetting mechanism **9** to the frame member **14** and allowing the stepper resetting mechanism **9** to regulate the movement of the first step pedal **2** and the second step pedal **3**. In the preferred embodiment of the present invention, the stepper resetting mechanism **9** returns the first step pedal **2** and the second step pedal **3** from an actuated position to an equilibrium position. This enables the first step pedal **2** and the second step pedal **3** to slide in opposite directions relative to each other along the frame member **14**.

The stand member **18** serves as a base for the stationary bicycle assembly **4**. The bridge **19** serves as a connecting point in between the frame member **14** and the stand member **18**. The frame member **14** is hingedly and adjacently connected to the bridge **19**. The stand member **18** is hingedly and adjacently connected to the bridge **19** as well, opposite to the frame member **14**. This enables the present invention to be folded into a compact configuration for convenient storage.

The stationary bicycle assembly **4** functions similarly to a bicycle and simulates the action of riding a bicycle while remaining in a stationary position. The stationary bicycle assembly **4** is mounted along the stand member **18** and is thus positioned away from the stepper assembly **1**.

With continued reference to FIGS. **1-4**, the frame member **14** comprises a first rail **15** and a second rail **16**. The first rail **15** and the second rail **16** enable the first step pedal **2** and the second step pedal **3** to slide along the frame member **14**. The first rail **15** and the second rail **16** are positioned adjacent to each other in order to enable the first step pedal **2** and the second step pedal **3** to move side-by-side. The first step pedal **2** is slidably engaged to the first rail **15** while the second step pedal **3** is slidably engaged to the second rail **16**. The first step pedal **2** and the second step pedal **3** are thus able to slide along the first rail **15** and the second rail **16**, respectively, under influence of the stepper resetting mechanism **9**. In the preferred embodiment of the present invention, the stepper resetting mechanism **9** comprises a pulley **10** and a chain **11** that are utilized to move the first step pedal **2** and the second step pedal **3** in opposite directions relative to each other along the frame member **14** during use of the stepper assembly **1**. As shown in FIG. **3**, a first end **12** of the chain **11** is tethered to the first step pedal **2** while a second end **13** of the chain **11** is tethered to the second step pedal **3**. The chain **11** is thus able to pull and direct the movement of the first step pedal **2** and the second step pedal **3** along the first rail **15** and the second rail **16**. The pulley **10** is rotatably mounted to the first rail **15** and the second rail **16** while the chain **11** is tensionably engaged about the pulley **10**. As a result, the sliding motion of the first step pedal **2** and the second step pedal **3** on the first rail **15** and the second rail **16** allows the chain **11** to rotate the pulley **10**, ensuring that the first step pedal **2** and the second step pedal **3** slide in opposite directions relative to each other on the first rail **15** and the second rail **16**. The pulley **10** is positioned adjacent to the bridge **19** and is thus offset from the stepper assembly **1** on the frame member **14**.

Alternative embodiments of the present invention may utilize various additional types of mechanisms for the stepper resetting mechanism **9**. One such example is a hydraulic cylinder mechanism featuring two hydraulic cylinders that serve to return the first step pedal **2** and the second step pedal **3** from an actuated position to an equilibrium position when the hydraulic cylinders are actuated. The hydraulic cylinders may be connected to the frame member **14** in a manner such that the present invention may still be folded into a compact configuration.

With continued reference to FIGS. **1-4**, in various embodiments of the present invention, the first step pedal **2** and the second step pedal **3** may be removable from the

first rail **15** and the second rail **16**. As such, the present invention further comprises a first detachable carriage **20** and a second detachable carriage **21** that enable the first step pedal **2** and the second step pedal **3** to be removed from the frame member **14** as needed. The user may wish to remove the first step pedal **2** and the second step pedal **3** in order to ensure that the first step pedal **2** and the second step pedal **3** do not obstruct the user's legs during use of the stationary bicycle assembly **4**. The first step pedal **2** is slidably mounted to the first rail **15** by the first detachable carriage **20** while the second step pedal **3** is slidably mounted to the second rail **16** by the second detachable carriage **21**. The first detachable carriage **20** and the second detachable carriage **21** are thus able to slide along the first rail **15** and the second rail **16** along when the user applies force to the first step pedal **2** and the second step pedal **3**.

In the preferred embodiment of the present invention, the first rail **15** and the second rail **16** are curved and each comprise a concave portion **17**. The curved design of the first rail **15** and the second rail **16** provides a beneficial effect to the unique range of motion experienced by the user during use of the stepper assembly **1**. The concave portion **17** is oriented toward the frame member **14** in order to provide an alternative range of motion during exercise compared to the range of motion provided by a straight design.

The present invention further comprises a chain braking system **22** that is utilized to adjust the difficulty of exercising utilizing the stepper assembly **1**. The chain braking system **22** is mechanically integrated between the frame member **14** and the stepper resetting mechanism **9**. As such, the chain braking system **22** is able to adjust the resistance of the stepper resetting mechanism **9** to the movement of the first step pedal **2** and the second step pedal **3** on the first rail **15** and the second rail **16** while the user is exercising. The chain **11** is operatively integrated through the chain braking system **22**, allowing the chain braking system **22** to increase or decrease angular speed of the chain **11** about the pulley **10**. This in turn increases or decreases the difficulty of exercise utilizing the stepper assembly **1**.

The stationary bicycle assembly **4** comprises a flywheel assembly **5**, a first cycle pedal **6**, and a second cycle pedal **7**. When the user is exercising on the stationary bicycle assembly **4**, the first cycle pedal **6** and the second cycle pedal **7** are rotated, causing the

flywheel assembly **5** to spin and build momentum. As with the first step pedal **2** and the second step pedal **3**, the first cycle pedal **6** and the first cycle pedal **6** may be covered with a rubberized coating to minimize slippage. The flywheel assembly **5** additionally provides constant resistance to the stationary bicycle assembly **4**. The resistance of the stationary bicycle assembly **4** may be adjusted in order to increase or decrease the difficulty of exercising utilizing the stationary bicycle assembly **4**. The flywheel assembly **5** is mounted along the stand member **18** and is thus positioned away from the stepper assembly **1** positioned on the frame member **14**. The first cycle pedal **6** and the second cycle pedal **7** are torsionally connected into the flywheel assembly **5**, allowing the first cycle pedal **6** and the second cycle pedal **7** to spin the flywheel assembly **5**. As shown in FIG. **4**, a rotation axis **8** of the first cycle pedal **6** and a rotation axis **8** of the second cycle pedal **7** are oriented perpendicular to the stand member **18**. The stationary bicycle assembly **4** may thus be utilized to exercise in a similar manner to a conventional standalone stationary bicycle.

The present invention may further comprise an adjustable seat **23**. The adjustable seat **23** is mounted into the bridge **19** and is thus positioned in between the stepper assembly **1** and the stationary bicycle assembly **4**. The adjustable seat **23** may be locked in place via a pin lock. The adjustable seat **23** may be positioned within the bridge **19** in a manner such that the leg room is increased when utilizing the present invention.

The present invention may further comprise a seat adjustment member **24**. In the embodiment of the present invention shown in FIGS. **1-4**, the seat adjustment member **24** is utilized to rotate the adjustable seat **23** to face the stepper assembly **1** or the stationary bicycle assembly **4**. In this embodiment of the present invention, the seat adjustment member **24** is rotatably engaged into the bridge **19**, enabling the adjustable seat **23** to be rotated to face the stepper assembly **1** or the stationary bicycle assembly **4**. The seat adjustment member **24** may then be locked into place. In the embodiment of the present invention shown in FIG. **5**, the seat adjustment member **24** is utilized to adjust the height of the adjustable seat **23** relative to the bridge **19**. In this embodiment of the present invention, the seat adjustment member **24** is adjacently connected to the adjustable seat **23** and as such may be utilized to increase or decrease the height of the adjustable seat **23**. The seat adjustment member **24** is slidably engaged into the bridge **19**. The seat

adjustment member **24** may thus be inserted into or drawn out of the bridge **19** in order to adjust the height of the adjustable seat **23**. After the adjustable seat **23** is at the desired height, the seat adjustment member **24** may be locked into place.

In various embodiments of the present invention, the stationary bicycle assembly **4** may be removable from the stand member **18**. The present invention further comprises at least one mounting bracket **25** for use in holding the stationary bicycle assembly **4**. The at least one mounting bracket **25** is positioned on the stand member **18**, enabling the stationary bicycle to be fastened to the stand member **18** utilizing the at least one mounting bracket **25**. The stationary bicycle assembly **4** is removably mounted to the stand member **18** by the at least one mounting bracket **25**, allowing the user to remove the stationary bicycle assembly **4** from the stand member **18** altogether. The user may wish to separate the stationary bicycle assembly **4** from the stand member **18** in order to ensure that the stationary bicycle assembly **4** does not obstruct the user's movement during use of the stepper assembly **1**.

While the present invention may be utilized hands-free, the present invention may further comprise a handlebar assembly **26** to improve user stability while exercising. The handlebar assembly **26** is mounted into the bridge **19** and may be grasped by the user while exercising to stabilize his or her body.

As shown in FIG. **6** and FIG. **7**, the present invention may additionally include an electronic monitoring device that is utilized to track various statistics such as total workout time, number of steps taken, and calories burned. The electronic monitoring device may be battery-operated or connected to an external electrical source such as a wall outlet. The electronic monitoring device may be mounted facing toward the stepper assembly **1** or facing toward the stationary bicycle assembly **4**. Additionally, the electronic monitoring device may be mounted in a manner such that the orientation of the electronic monitoring device may be changed.

Although the present invention has been explained in relation to its preferred embodiment, it is understood that many other possible modifications and variations can be made without departing from the spirit and scope of the present invention as hereinafter claimed.

What is claimed is:

1. A multifunctional exercise machine comprises:

a stepper assembly;

a stationary bicycle assembly;

a stepper resetting mechanism;

a frame member;

a stand member;

a bridge;

the stepper assembly comprises a first step pedal and a second step pedal;

the first step pedal and the second step pedal being slidably mounted along the frame member;

the first step pedal and the second step pedal being positioned opposite to each other about the frame member;

the stepper resetting mechanism being operatively connected in between the stepper assembly and the frame member, wherein the stepper resetting mechanism returns the first step pedal and the second step pedal from an actuated position to an equilibrium position;

the frame member being hingedly and adjacently connected to the bridge;

the stand member being hingedly and adjacently connected to the bridge, opposite to the frame member; and

the stationary bicycle assembly being mounted along the stand member.

2. The multifunctional exercise machine as claimed in claim 1 further comprises:

the frame member comprises a first rail and a second rail;

the stepper resetting mechanism comprises a pulley and a chain;

the first rail and the second rail being positioned adjacent to each other;

the first step pedal being slidably engaged to the first rail;

the second step pedal being slidably engaged to the second rail;

a first end of the chain being tethered to the first step pedal;

a second end of the chain being tethered to the second step pedal;

the pulley being rotatably mounted to the first rail and the second rail;

the chain being tensionably engaged about the pulley; and

the pulley being positioned adjacent to the bridge.

3. The multifunctional exercise machine as claimed in claim 2 further comprises:

a first detachable carriage;

a second detachable carriage;

the first step pedal being slidably mounted to the first rail by the first detachable carriage; and

the second step pedal being slidably mounted to the second rail by the second detachable carriage.

4. The multifunctional exercise machine as claimed in claim 1 further comprises:

the frame member comprises a first rail and a second rail;

the first rail and the second rail each comprise a concave portion; and

the concave portion being oriented toward the frame member.

5. The multifunctional exercise machine as claimed in claim 2 further comprises:

a chain braking system;

the chain braking system being mechanically integrated between the frame member and the stepper resetting mechanism; and

the chain being operatively integrated through the chain braking system, wherein the chain braking system increases or decreases angular speed of the chain about the pulley.

6. The multifunctional exercise machine as claimed in claim 1 further comprises:

the stationary bicycle assembly comprises a flywheel assembly, a first cycle pedal, and a second cycle pedal;

the flywheel assembly being mounted along the stand member;

the first cycle pedal and the second cycle pedal being torsionally connected into the flywheel assembly; and

a rotation axis of the first cycle pedal and a rotation axis of the second cycle pedal being oriented perpendicular to the stand member.

7. The multifunctional exercise machine as claimed in claim 1 further comprises:
an adjustable seat; and
the adjustable seat being mounted into the bridge.

8. The multifunctional exercise machine as claimed in claim 8 further comprises:
a seat adjustment member;
the seat adjustment member being adjacently connected to the adjustable seat; and
the seat adjustment member being slidably engaged into the bridge.

9. The multifunctional exercise machine as claimed in claim 8 further comprises:
a seat adjustment member;
the seat adjustment member being adjacently connected to the adjustable seat; and
the seat adjustment member being rotatably engaged into the bridge.

10. The multifunctional exercise machine as claimed in claim 1 further comprises:
at least one mounting bracket;
the at least one mounting bracket being positioned on the stand member; and
the stationary bicycle assembly being removably mounted to the stand member by the at least one mounting bracket.

11. The multifunctional exercise machine as claimed in claim 1 further comprises:
a handlebar assembly; and
the handlebar assembly being mounted into the bridge.

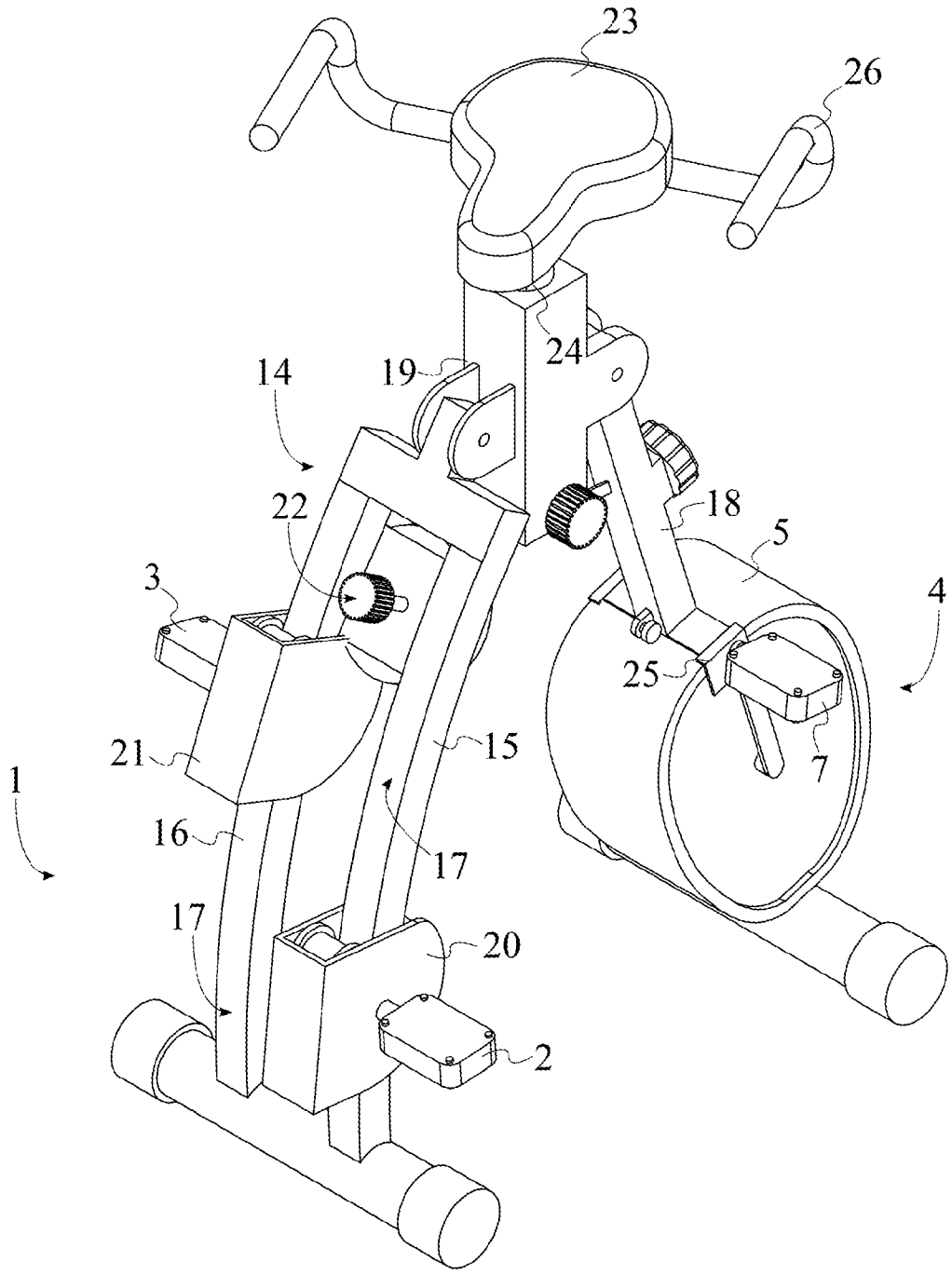

FIG. 1

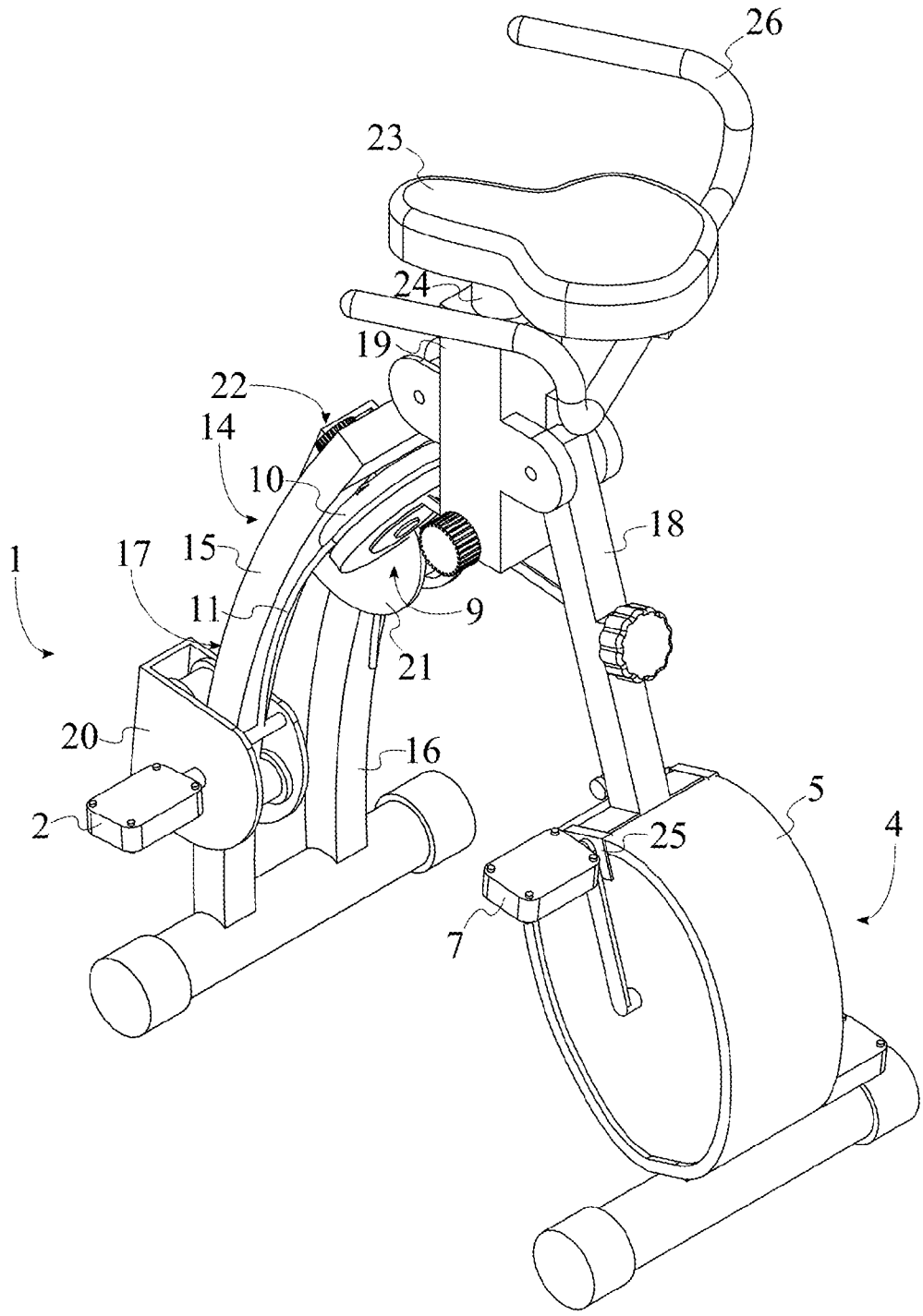

FIG. 2

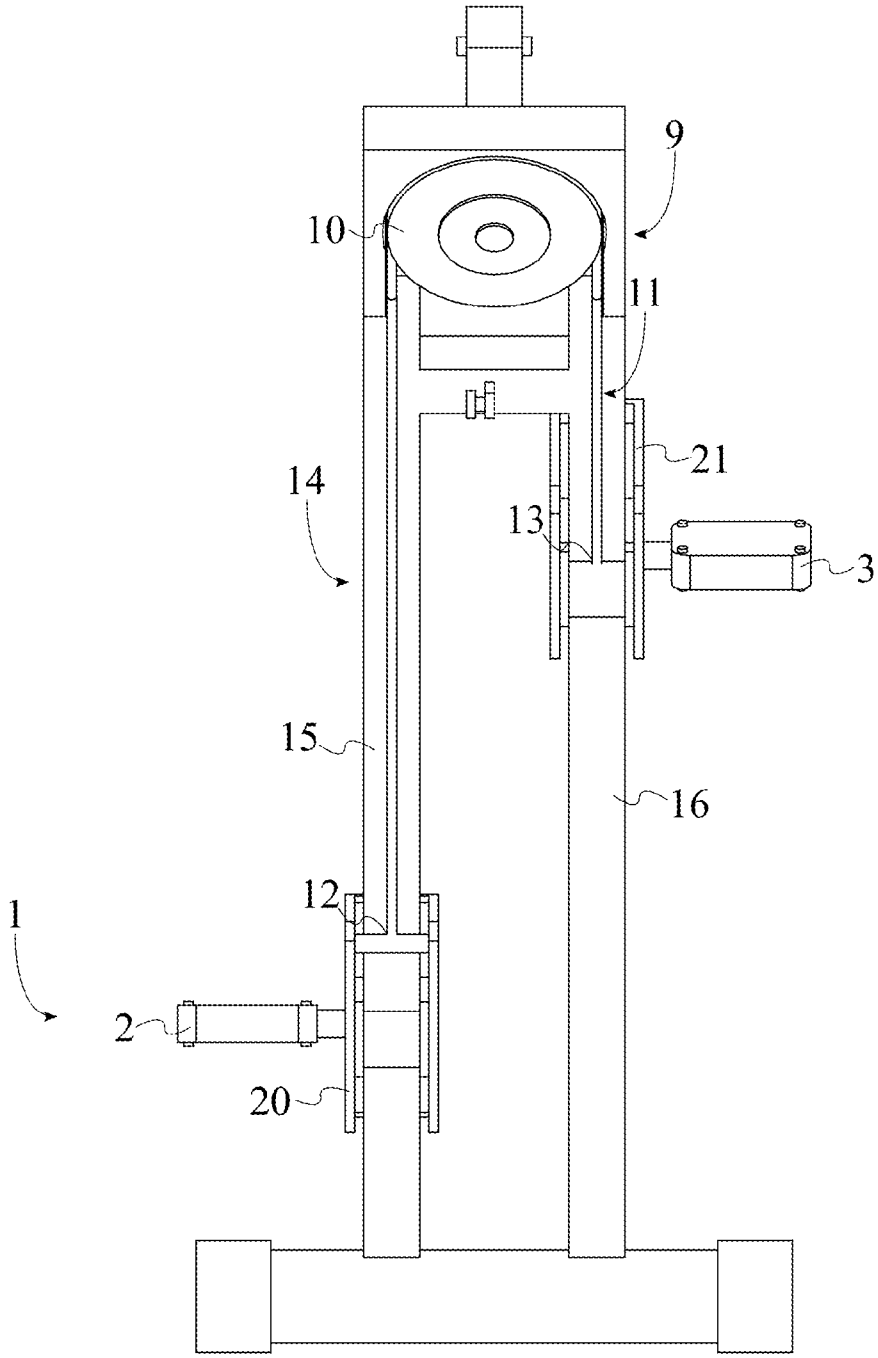

FIG. 3

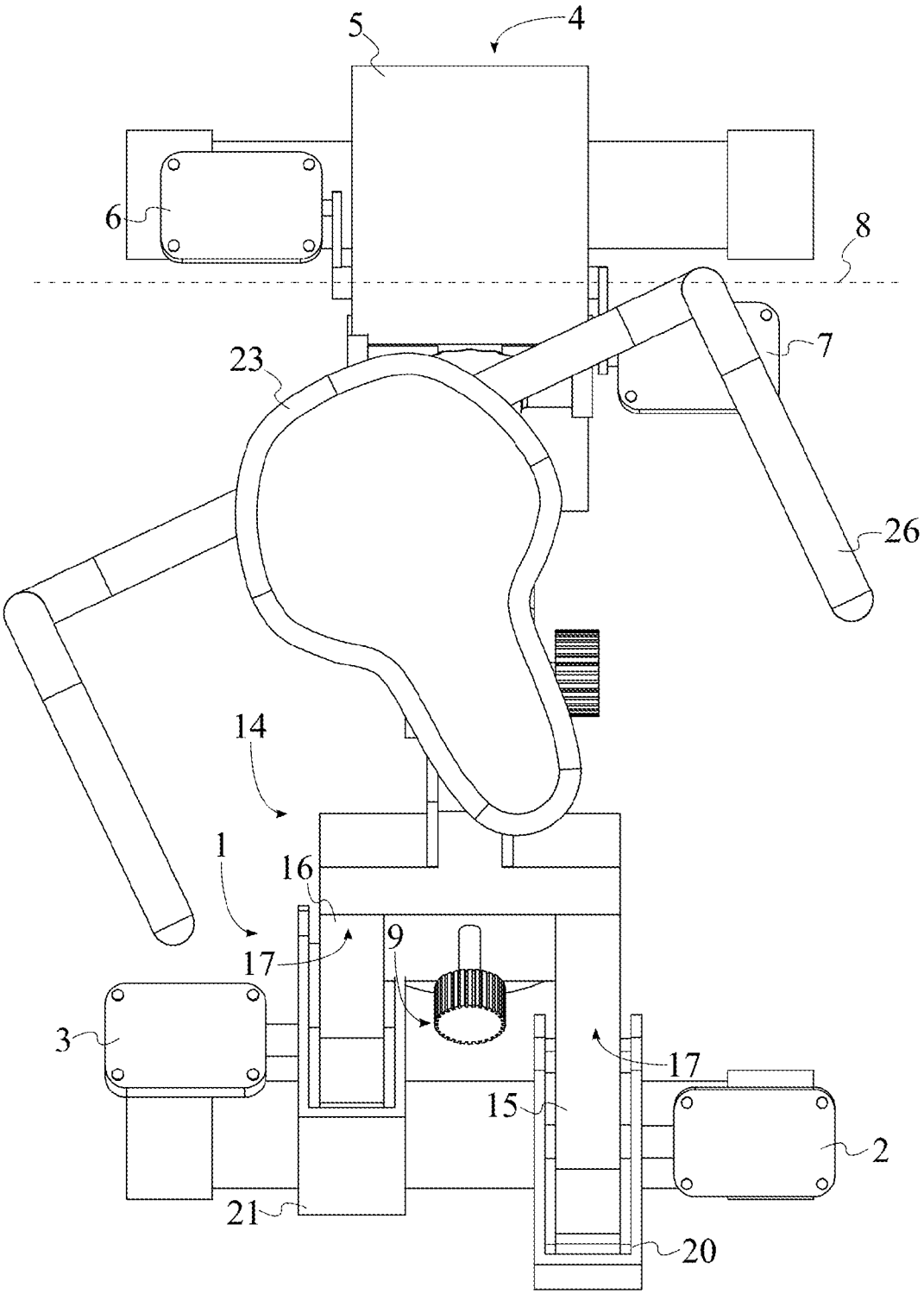

FIG. 4

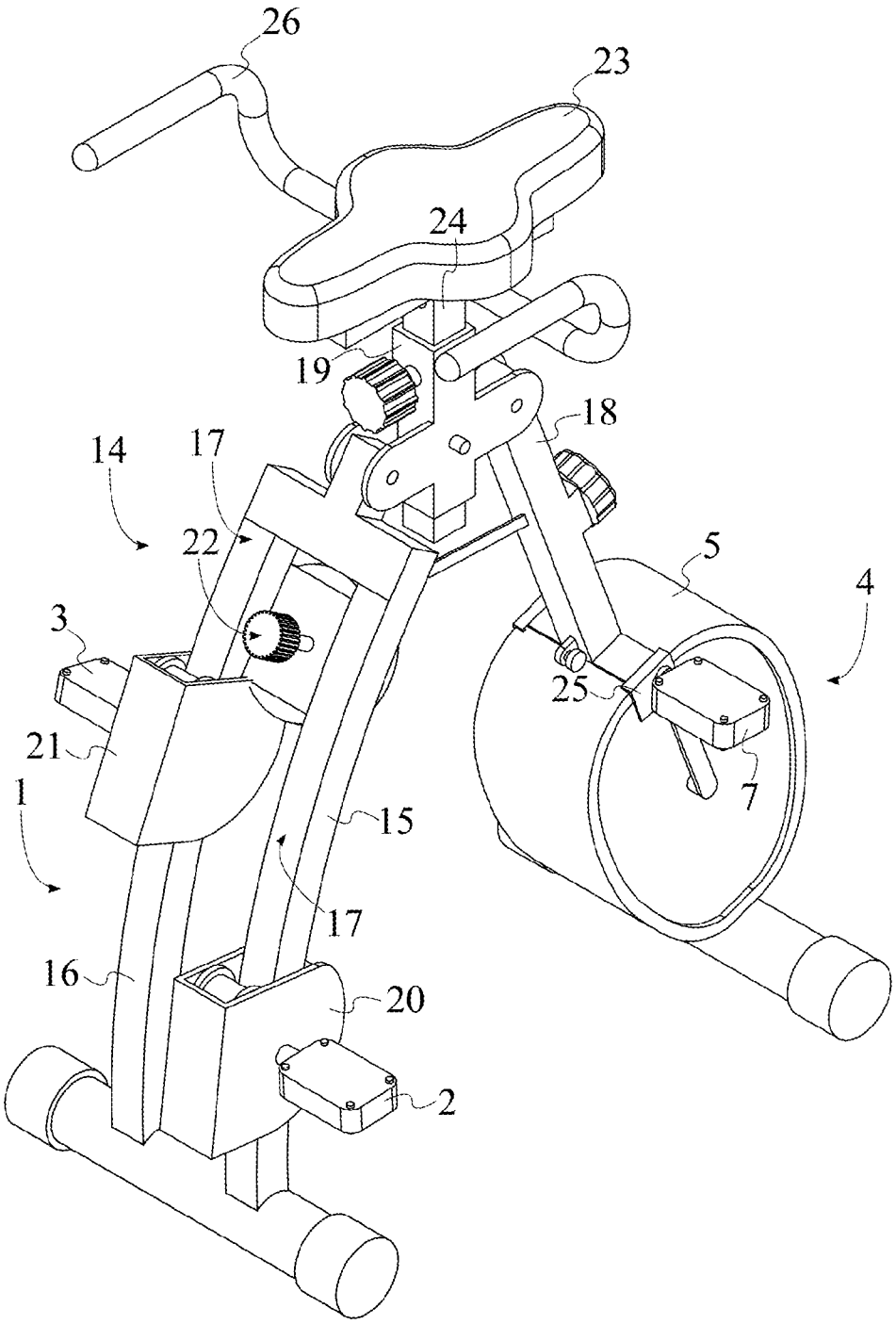

FIG. 5

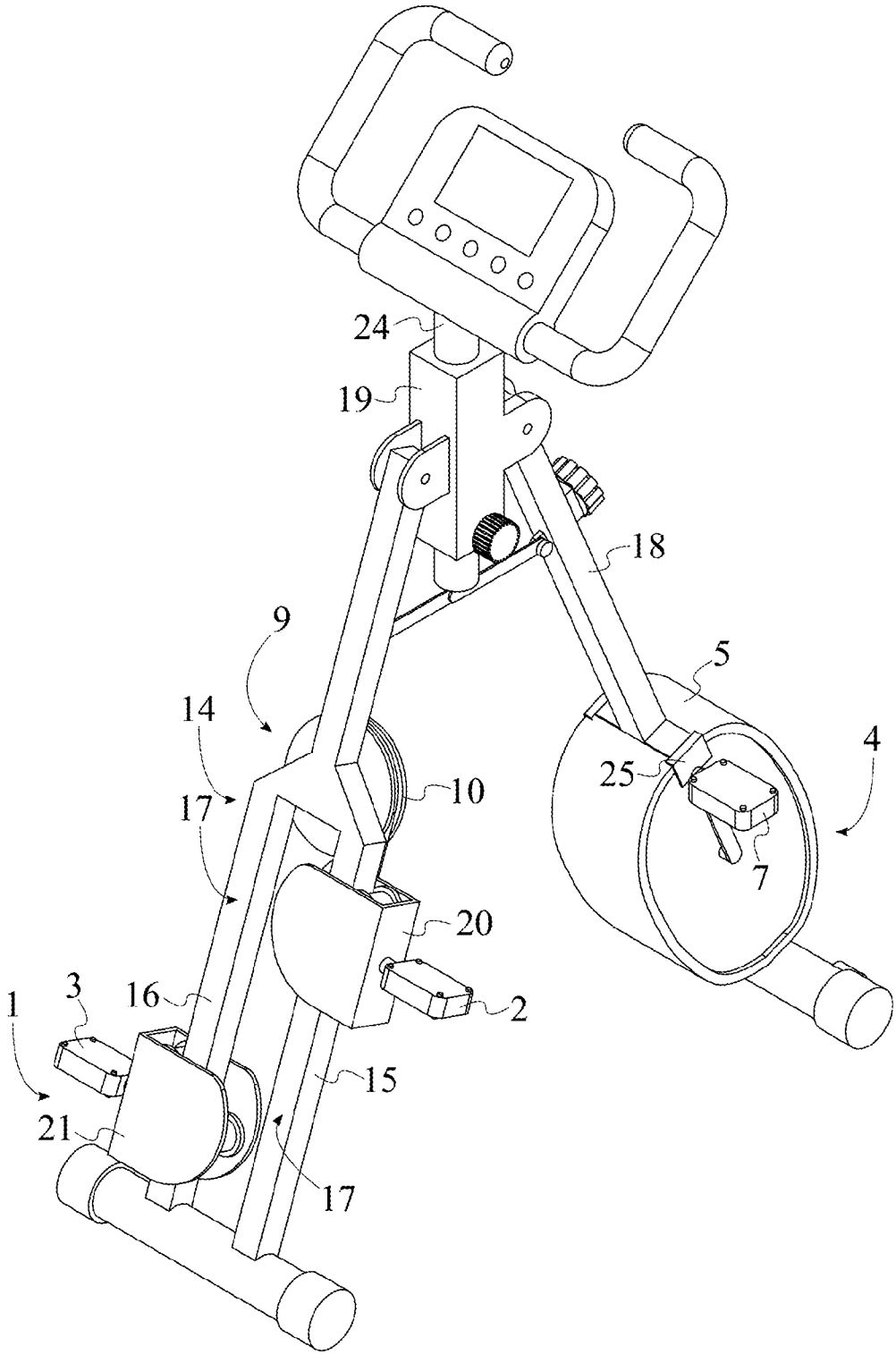

FIG. 6

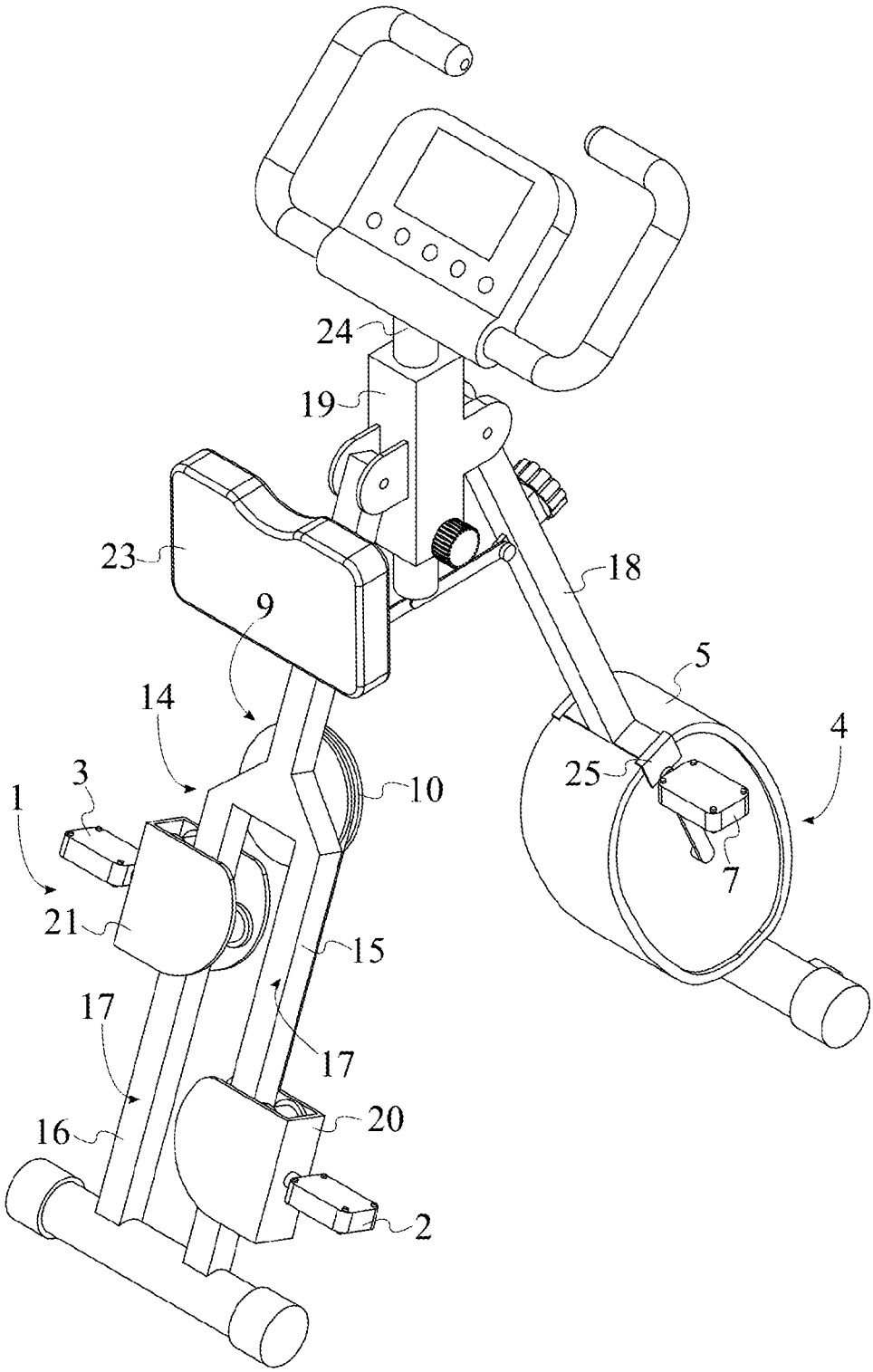

FIG. 7

INTERNATIONAL SEARCH REPORT

International application No.

PCT/IB 2016/054191

A. CLASSIFICATION OF SUBJECT MATTER

A63B 22/04 *(2006.01)*
A63B 22/06 *(2006.01)*
A63B 22/08 *(2006.01)*
A63B 23/04 *(2006.01)*
A63B 69/16 (2006.01)

According to International Patent Classification (IPC) or to both national classification and IPC

B. FIELDS SEARCHED

Minimum documentation searched (classification system followed by classification symbols)

A63B 22/04, 22/06, 22/08, 22/00, 23/04, 23/00, 23/08, 69/16

Documentation searched other than minimum documentation to the extent that such documents are included in the fields searched

Electronic data base consulted during the international search (name of data base and, where practicable, search terms used)

PatSearch (RUPTO internal), Espacenet

C. DOCUMENTS CONSIDERED TO BE RELEVANT

Category*	Citation of document, with indication, where appropriate, of the relevant passages	Relevant to claim No.
A	US 5299992 A (WILLIAM T. WILKINSON) 05.04.1994	1-11
A	US 2007/0243980 A1 (JOHN BOWSER) 18.10.2007	1-11
A	US 5928114 A (ROBERT W.P. CHEN) 27.07.1999	1-11
A	US 2009/0239714 A1 (TY SELLERS) 24.09.2009	1-11

☐ Further documents are listed in the continuation of Box C.

☐ See patent family annex.

* Special categories of cited documents:

"A" document defining the general state of the art which is not considered to be of particular relevance

"E" earlier document but published on or after the international filing date

"L" document which may throw doubts on priority claim(s) or which is cited to establish the publication date of another citation or other special reason (as specified)

"O" document referring to an oral disclosure, use, exhibition or other means

"P" document published prior to the international filing date but later than the priority date claimed

"T" later document published after the international filing date or priority date and not in conflict with the application but cited to understand the principle or theory underlying the invention

"X" document of particular relevance; the claimed invention cannot be considered novel or cannot be considered to involve an inventive step when the document is taken alone

"Y" document of particular relevance; the claimed invention cannot be considered to involve an inventive step when the document is combined with one or more other such documents, such combination being obvious to a person skilled in the art

"&" document member of the same patent family

Date of the actual completion of the international search	Date of mailing of the international search report
03 November 2016 (03.11.2016)	17 November 2016 (17.11.2016)
Name and mailing address of the ISA/RU: Federal Institute of Industrial Property, Berezhkovskaya nab., 30-1, Moscow, G-59, GSP-3, Russia, 125993 Facsimile No: (8-495) 531-63-18, (8-499) 243-33-37	Authorized officer N. Eliseev Telephone No. (495)531-64-81