Sept. 19, 1950 P. DE LAMATER 2,523,001

STUD ASSEMBLY INSTRUMENT CONNECTION LOCKING MEANS

Filed March 2, 1945

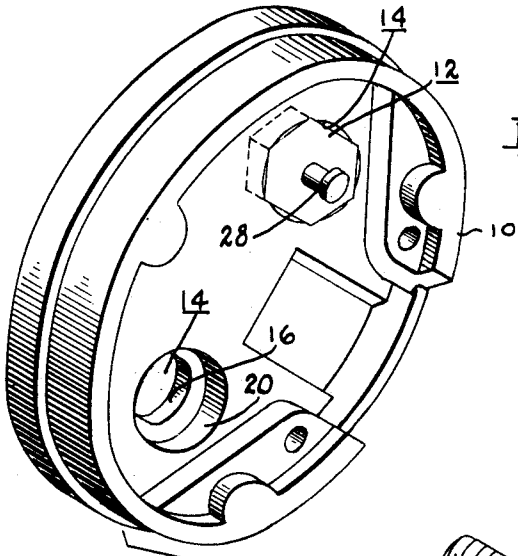

FIG. 1

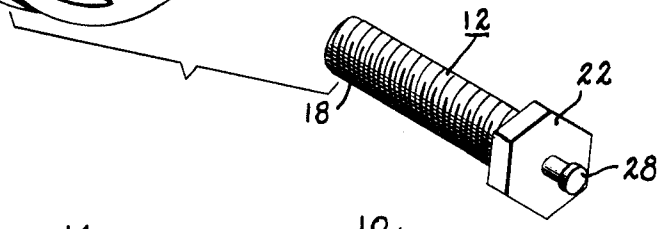

FIG. 2.

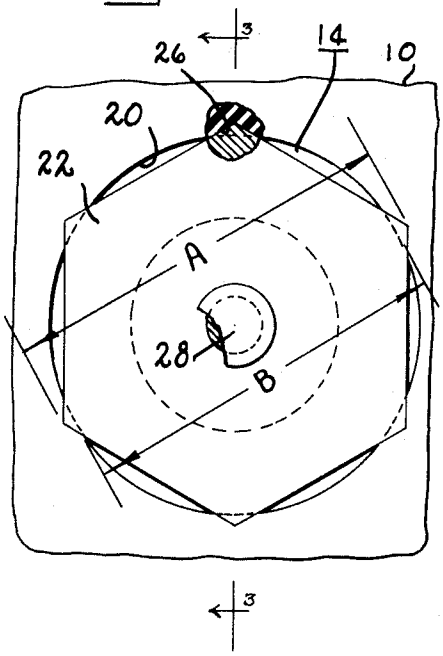

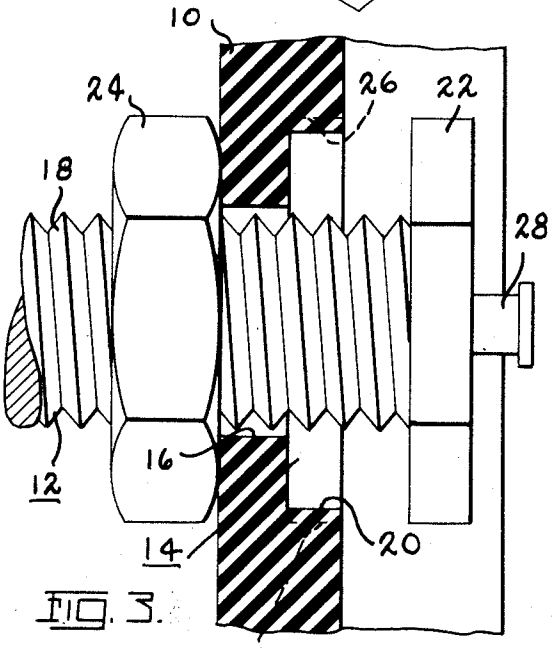

FIG. 3.

INVENTOR
PAUL DE LAMATER,

BY
Toulmin & Toulmin
ATTORNEYS

Patented Sept. 19, 1950

2,523,001

UNITED STATES PATENT OFFICE

2,523,001

STUD ASSEMBLY INSTRUMENT CONNECTION LOCKING MEANS

Paul De Lamater, Bluffton, Ohio, assignor to The Triplett Electrical Instrument Company, Bluffton, Ohio, a corporation of Ohio

Application March 2, 1945, Serial No. 580,600

1 Claim. (Cl. 173—259)

1

This invention relates to stud mountings and, in particular, to mountings for studs in applications where the head end thereof is not accessible for receiving a wrench or screw driver.

In many instances, such as electrical instrument mountings, a stud is provided which extends through the rear wall of the instrument and which provides, simultaneously, a mounting means for the instrument and lead ins for accomplishing the electrical connections. It is customary in instruments of this type to provide for a stud having a head thereon which may be hexagonal and to further provide in the rear wall of the casing an aperture for receiving the stud, the inner end of which is shaped to fit the stud head. Then, when the stud is in position a nut is screwed on to the stud to engage the back wall of the instrument and thereafter the mounting and electrical connections are accomplished by other nuts screwed on to the stud.

It has been found that this type of securing means for the stud is somewhat unsatisfactory in that the screwing on and off of the nuts to make new connections or to remount the instrument causes the studs to turn slightly so that they become loose and the electrical connections inside the instrument sometimes become broken.

Accordingly, it is a particular object of the present invention to provide an improved stud mounting for an electrical instrument.

More paricularly, it is an object to provide a stud mounting for an electrical instrument in which the stud is rigidly secured to the casing of the instrument.

It is another object to provide a means for securing a stud in the wall of an instrument casing so that connections may be made to the said stud externally of the instrument without causing the stud to become loosened.

These and other objects and advantages will become more apparent upon reference to the accompanying drawing, in which:

Figure 1 is a perspective view showing a rear wall of an instrument having a stud mounting according to this invention;

Figure 2 is an enlarged plan view showing the stud in relationship to the rear wall; and

Figure 3 is a vertical section through the stud and wall and is indicated by the line 3—3 on Figure 2.

Referring to the drawings, 10 indicates a wall in which a pair of studs 12 are to be mounted and may comprise the rear wall of an instrument such as an electrical instrument.

The rear wall is provided with a pair of counter-bored apertures 14 and the smaller diameter of which at 16 is adapted for receiving the threaded shank 18 of the stud 12 while the larger diameter 20 is adapted for receiving the head 22.

2

Upon reference to Figure 3, it will be noted that the distance indicated at A from corner to corner of the head 22 is somewhat greater than the distance indicated at B which is the diameter of the recess 20.

The means of securing the stud to the member 10 is shown in Figure 3 where it will be seen that a nut 24 is adapted to be threaded on the portion 18 of the stud 12 so that the head 22 thereof will be pulled into the recess 20 of the counter-bored aperture 14. The head 22 being larger across the points thereof than the diameter of the recess 20, the said points will cut grooves around the periphery of the recess as indicated at 26 so that when the nut 24 is finally tightened the stud 18 is firmly retained against rotation. The engagement of the head 22 with the recess 20 is considerably tighter than could be accomplished by the former methods of molding the apertures in the member 10 to shape including a shaped recessed portion for receiving the said head.

A further advantage to be gained by the practice of my invention is that a relatively simple machining operation is effective to produce the counter-bored apertures 14 whereas according to former practice it was necessary to mold the shaped aperture at the time of manufacturing the member 10.

Also, the counter-bored apertures 14 may be located anywhere in the member 10 that it is desired to place them so that redesign of an instrument requiring new stud locations does not involve expensive production difficulties.

The studs 12 may comprise on their inner end a projection 28 which is for the purpose of receiving an electrical connection which may be soldered thereto. It will be apparent that the improved stud mounting of this invention provides for a more secure electrical connection inasmuch as the stud 12 does not move when the external connections are made to the instrument or when it is mounted.

It will be understood that the member 10 is preferably formed of a plastic material such as Bakelite which is a good electrical insulator and the heads 22 of the studs 12 are substantially harder than the substance of the member 10 so that the points of the said head may dig in to the edge of the recess 20.

While I have shown certain constructions in

the drawings, it will be understood that I desire to comprehend such modifications in structure and arrangement and substitution of equivalents as may be considered to come within the scope of this disclosure and the appended claim.

I claim:

In combination, a base plate for an electrical instrument or the like, said plate being of rigid electrical insulating material and having a cylindrical bore therethrough and a cylindrical counterbore in the end of the bore inside of said plate, a metallic stud having a head thereon, said plate material being softer than the material of said stud, said head having a plurality of faces forming the shape of a regular polygon, said stud having a threaded shank part and being inserted through said bore with the head thereof in said counterbore, all of said faces being of the same size and shape, the junction of adjacent faces forming corners equidistant from the stud axis, a nut threaded on said shank on the opposite side of said plate from said head so that when said nut is tightened against said plate,

said head is forced into said counterbore and said corners are forced into a self-cutting interlocking engagement with the periphery of said counterbore whereby said stud is rigidly held against rotation, and means associated with said head for making electrical connectors to said stud, said counterbore being deformed equidistantly around its periphery due to the equidistant spacing of said corners about said head.

PAUL DE LAMATER.

REFERENCES CITED

The following references are of record in the file of this patent:

UNITED STATES PATENTS

Number	Name	Date
797,545	Ette	Aug. 15, 1905
813,093	Henn	Feb. 20, 1906
1,578,667	Kelsay	Mar. 30, 1926
1,646,890	Tuska	Oct. 25, 1927