(19) Octrooicentrum Nederland

(11) **1040585**

(12)C **OCTROOI**

(21) Aanvraagnummer: **1040585**

(22) Aanvraag ingediend: **02.01.2014**

(51) Int.Cl.:
F16G 5/16 (2006.01) ***B21D 28/06*** (2006.01)
B21D 53/14 (2006.01)

(43) Aanvraag gepubliceerd:
-

(47) Octrooi verleend:
06.07.2015

(45) Octrooischrift uitgegeven:
15.07.2015

(73) Octrooihouder(s):
Robert Bosch GmbH te Stuttgart, BONDSREPUBLIEK DUITSLAND (DE).

(72) Uitvinder(s):
Geoffrey de Roos te Tilburg.

(74) Gemachtigde:
ir. G.A.J.M. Plevier te Tilburg.

(54) **Basic material for a transverse segment for a drive belt for a continuously variable transmission and blanking method using it.**

(57) The invention relates to a basic material (50) for the blanking of a transverse segment (10) for a drive belt for a belt-and-pulley-type continuously variable transmission. The basic material (50) is provided, i.e. is pre-shaped with a step (20) and with a taper (25) adjoining the step (20). With this type, i.e. shape of basic material (50) a distance or separation between the step (20) and a tilting edge (18) of the transverse segment (10) in the form of a convexly curved area that extends from one side of the transverse segment (10) to the other and that is pressed into the basic material (50) as part of the overall blanking process, can be favourably increased relative to a conventional (-ly shaped) basic material (50) including only the step (20).

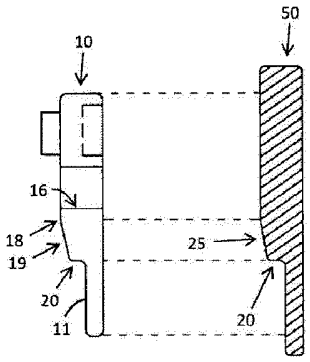

NL C 1040585

Dit octrooi is verleend ongeacht het bijgevoegde resultaat van het onderzoek naar de stand van de techniek en schriftelijke opinie. Het octrooischrift komt overeen met de oorspronkelijk ingediende stukken.

BASIC MATERIAL FOR A TRANSVERSE SEGMENT FOR A DRIVE BELT FOR A CONTINUOUSLY VARIABLE TRANSMISSION AND BLANKING METHOD USING IT

This disclosure concerns a transverse segment that is suitable to become part of a drive belt for a continuously variable transmission. One specific type of drive belt for a continuously variable transmission comprises two bundles of continuous bands or rings made from steel, which rings carry a number of transverse segments that are likewise made from steel. The transverse segments are movably arranged along the entire circumference of the rings and transmit forces that are related to the operation of the transmission wherein the drive belt is provided. This type of drive belt is known from, for instance, the European patent application EP-1531284-A.

In the following description of the transverse segment, the mentioned directions refer to the situation in which the transverse segment is part of the drive belt. A thickness direction of the transverse segment corresponds to a circumference direction of the drive belt. A vertical transverse or height direction of the transverse segment corresponds to a radial direction of the drive belt. A horizontal transverse direction or width direction of the transverse segment corresponds to a direction perpendicular to both the thickness direction and the vertical direction. The indication of any transverse segment as subsequent transverse segment or previous transverse segment with respect to an adjacent transverse segment is related to a direction of movement of the drive belt.

In the horizontal direction the transverse segment is on both sides provided with openings for at least partially receiving the rings. For the purpose of supporting the rings, the transverse segment comprises supporting surfaces. For the purpose of contact between the transverse segment and pulley sheaves of a continuously variable transmission, the transverse segment is on both sides provided with contacting surfaces, which are divergent in the direction of the supporting surfaces.

In the vertical upward direction, the transverse segment comprises successively a base portion, a middle portion of which the dimensions in the horizontal direction are smaller than those of the base portion, and a top portion of which the dimensions in the horizontal direction at the location of the connection to the

middle portion are larger than those of the middle portion. The base portion comprises the supporting surfaces and the contacting surfaces. At the drive belt, the base portion is located at the side of the inner circumference of the drive belt, whereas the top portion is located at the side of the outer circumference of the drive belt. An important function of the middle portion is interconnecting the base portion and the top portion.

The transverse segment has two main body surfaces that largely face in the circumference direction of the drive belt, namely a front main surface and a rear main surface, which latter surface are mutually separated in that circumference direction over the (local) thickness of the transverse segment. At least a part of a front main surface of the transverse segment is designed to abut against at least a part of the rear main surface of a subsequent transverse segment in the drive belt and vice versa.

In the drive belt, two adjacent transverse segments are tiltable with respect to each other about a tilting edge, which is usually provided in the form of a convexly curved area of the front main surface extending over the entire width of the transverse segments. The tilting edge, i.e. the said convexly curved area, thus divides the front main surface into two parts that are oriented at an angle relative to one other. An important function of the tilting edge is to provide a mutual contact between adjacent transverse segments in the drive belt, at least where these are in a slightly axially rotated orientation relative to one another between the pulley sheaves of a pulley.

Furthermore, at some distance below, i.e. radially inward of the said tilting edge, the base portion of the known transverse segment is provided with a step in the thickness direction. Just below such step the thickness of the transverse segment is thus less than just above it. In this respect, it is known to apply a stepwise thickness reduction of the base portion of the transverse segment of about 0.3 mm for a transverse segment having a largest thickness of 1.5 mm. Usually, such step is formed on the same side of the transverse segment just as the as the tilting edge, i.e. in the front main surface thereof.

As part of the overall manufacturing process of the transverse segment, it is cut out of a steel strip or plate of basic material by means of a blanking process, which process is

described, for instance, the European patent application EP-1287924-A. Also in the overall manufacturing process, and usually as an integral part of the blanking process, the tilting edge of the transverse segment is shaped by exerting pressure on and plastically deforming the respective main face of the transverse segment. The step of the transverse segment, however, is usually already provided in the basic material that is thus not flat, but is provided with a step that corresponds, in part, with the step of the base portion of the transverse segment.

By pre-shaping the basic material with the step, the extent of the plastic deformation that is required to form the tilting edge can be controlled by the distance that is allowed between the step and the tilting edge. In particular in this respect, by allowing a smaller vertical separation between such step and tilting edge, the said required plastic deformation is reduced, thus favourably reducing the force that is required to realise such deformation and favourably allowing the transverse segment to be shaped and sized with increased accuracy. On the other hand, other design considerations apply to the respective locations of the tilting edge and the step as well. For instance, for optimum performance of the drive belt, the tilting edge is mostly preferred to be located close to the ring sets, i.e. close to the top side of the base portion, whereas the step must not be located too high in the base portion, to provide the base portion with a sufficient mechanical strength, as well as a contact area of sufficient size in relation to the application of the transverse segment in the continuously variable transmission. Together the above requirements and considerations thus effectively set a limit on the height of the tilting edge in the base portion.

It is an object of the present disclosure to increase the allowable vertical separation between the step and the tilting edge in the base portion of the transverse segment, as a result whereof the tilting edge can be located favourably close(-r) to the rings.

According to the present disclosure the above object can be achieved by providing the basic material with a taper adjacent to the said step thereof, which taper is defined such that beyond the stepwise thickness increase of the basic material provided by the step, the thickness of the basic material continues to increase gradually. More in particular, such taper or gradual thickness

increase, starts at the step and ends at the location where the tilting edge of the transverse segment will be formed in the blanking process, beyond which end of the taper the thickness of the basic material is constant

The present disclosure relies a/o on the insight that by providing the basic material with the said taper, the extent of the plastic deformation that is required to form the tilting edge is reduced. As a consequence, the said distance that is allowed between the step and the tilting edge can be favourably increased relative to the known art, at least to the extent that the plastic deformation of the novel, tapered basic material to form the tilting edge is comparable to that of the conventionally shaped basic material.

In relation to the above-mentioned conventional transverse segment having a largest thickness of 1.5 mm and a stepwise thickness reduction of the base portion of about 0.3 mm, it is presently suggested to provide the basic material with a step that is about 0.15 mm and a tapered thickness increase of 0.15 mm over a length of 1.5 mm, which taper starts from the step. This latter length of 1.5 mm thus corresponds to a minimum separation between the step and the tilting edge of the transverse segment that is shaped and cut from such basic material.

Generally speaking, a practically applicable range for such length of the taper may be between 1 to 3 mm, whereas the taper is preferably angled between 2 and 10 degrees, more preferably between 5 and 7 relative to a plane defined by the surface of the basic material outside the taper, which plane will finally make-up and define the front main surface of the transverse segment to be finally formed from the basic material.

The invention will be explained in detail on the basis of the following description of preferred embodiments of the invention with reference to the drawing, in which equal reference signs indicate equal or similar parts, and in which:

figure 1 is a schematically drawn side view of a continuously variable transmission having a drive belt;

figure 2 is a front view of a transverse segment for a drive belt for a continuously variable transmission;

figure 3 is a side view of the transverse segment which is shown in figure 2;

figure 4 diagrammatically shows a longitudinal section of a blanking area of a blanking device, and of basic material being placed in there;

figure 5 diagrammatically illustrates the basic operation of the blanking process;

figures 6A and 6B schematically illustrate a detail of the blanking process when applied to the known basic material to form the known transverse segment;

figure 7 diagrammatically illustrates a relation between the known basic material and the known transverse segment that is to be shaped and cut from such known basic material;

figure 8 schematically illustrates a limitation of the blanking process in relation to the known basic material;

figure 9 schematically illustrates a novel basic material that is shaped in accordance with the present disclosure and the relation of such novel basic material with the transverse segment that is to be shaped and cut from such novel basic material; and

figures 10A and 10B schematically illustrate a detail of the blanking process when applied to the novel basic material.

Figure 1 diagrammatically shows a continuously variable transmission, such as for utilization in a motor vehicle. The continuously variable transmission is indicated in general by the reference sign 1.

The continuously variable transmission 1 comprises two pulleys 4, 5 being arranged on separate pulley shafts 2, 3. A drive belt 6 is provided in a closed loop around the pulleys 4, 5 and serves for transmitting torque between the pulley shafts 2, 3. The pulleys 4, 5 are each provided with two pulley sheaves, wherein the drive belt 6 is positioned and clamped between said two pulley sheaves, so that with the help of friction a force may be transmitted between the pulleys 4, 5 and the drive belt 6.

The drive belt 6 comprises two endless carriers 7 that are composed of a bundle of a number of mutually nested continuous bands or rings 8 (see figure 2). Transverse segments 10 are arranged on the carriers 7 forming an essentially contiguous row along the entire circumference thereof. The transverse segments 10 are provided movable with respect to the endless carriers 7, at least in the circumference direction thereof. For the sake of

simplicity, only a few of these transverse segments 10 are shown in figure 1.

Figures 2 and 3 show the transverse segment 10 of the known drive belt 6 in more detail. In figure 2 a front view of the transverse segment 10 is shown in a cross-section of the drive belt 6 oriented in the circumference direction thereof and in figure 3 a side elevation of the transverse segment 10 is provided.

In the vertical direction in figures 2 and 3, which vertical direction corresponds to the radial direction of the drive belt 6 when placed in a circular posture outside the transmission, the transverse segment 10 comprises successively a base portion 13 of predominantly trapezoidal shape, a relatively narrow middle portion 14 and a top portion 15 of predominantly triangular shape. In the drive belt 6, the carriers 7 thereof are located on either side of the middle portion 14, i.e. in-between the base portion 13 and the top portion 15 of transverse segment 10.

A circumference surface 16, 17 of the base portion 13 of the transverse segment 10 comprises two supporting surfaces 16, one on either side of the middle portion 14, that each serve to support a respective one of the two endless carriers 7 in radial outward direction. Furthermore, the circumference surface 16, 17 of the base portion 13 includes two contacting surfaces 17, one on either axial side of the transverse element 10, that each serve to contact a sheave of the pulleys 4, 5 when the transverse segment 10 moves over it.

A front main surface of the transverse segment 10 is indicated in general by the reference sign 11, whereas a back main surface of the transverse segment 10 is indicated in general by the reference sign 12. At the front main surface 11 in the base portion 13 of the transverse segment 10, a tilting edge 18 is defined. The tilting edge 18 is represented by a convexly curved area of the front main surface 11, which area separates two portions of the said front main surface 11 that are oriented at an angle relative to one other, and extends along the entire (axial) width of the transverse segment 10. The tilting edge 18 is located close to, but still at some distance below, i.e. radially inward from, the supporting surfaces 16. An important function of the tilting edge 18 is to provide a mutual pushing contact between the adjacent

transverse segments 10, when said transverse segments 10 are in a tilted position relative to one another at the pulleys 4, 5.

At some distance below the tilting edge 18, i.e. also in the base portion 13 of the transverse segment 10, a step 20 is defined in the front main surface 11 thereof. The step 20 represents a local, i.e. stepwise change of the thickness of the transverse segment 10. Just below such step 20 the thickness of the transverse segment is thus less than just above it.

Also, at the front main surface 11 of the transverse segment 10, a projection 21 is provided. In the shown example, the projection 21 is arranged in the top portion 15, and corresponds in position to a slightly larger hole provided in the rear main surface 12. In figure 3, the hole is depicted by means of dashed lines and indicated by the reference sign 22. In the drive belt 6, the projection 21 of the transverse segment 10 is at least partially located inside the hole 22 of an adjacent transverse segment 10. The projection 21 and the corresponding hole 22 serve to prevent or at least limit mutual displacement of adjacent transverse segments 10 in a plane perpendicular to the circumference direction of the drive belt 6.

The transverse segment 10 is typically cut out of plate-shaped basic material 50 in a blanking process by means of a blanking device 60. In figures 4 and 5, the blanking device 60 and the basic material 50 are diagrammatically illustrated in a cross-section. In the blanking device 60 a cutting member 30, a supporting member 40, a guiding plate 70 and a mould 80 are applied. The guiding plate 70 and the mould 80 serve both to clamp the basic material 50 between them and to contain the cutting member 30 and the supporting member 40 in respective guiding spaces 71, 81 thereof.

The part 51 of the basic material 50 that is located between the cutting member 30 and the supporting member 40 is destined to become the transverse segment 10. During the actual cutting, the bottom or working surface 31 of the cutting member 30 and a top or working surface 41 of the supporting member 40 are pressed against the basic material 50, at mutually opposite sides thereof, and the cutting member 30 and the supporting member 40 are pushed in unison completely through the basic material 50 in the general direction from the cutting member 30 to the supporting member 40 cutting out

the transverse segment 10, as is illustrated in figure 5. The solid arrows in figure 5 illustrate the forces that are respectively exerted by the cutting member 30 and the supporting member 40 on the basic material 50 during the blanking of the transverse segment 10. Thus although the supporting member 40 exerts a force of the supporting member 40 to shape the front main surface 11 thereof, such force is thus less than a force exerted by the cutting member 30 such that the basic material 50 is pierced by the cutting member 30 to cut out the transverse segment 10 there from.

Accordingly, the said working surfaces 31, 41 have an outline that substantially corresponds to the outer contour of the transverse segment 10. Moreover, the front main surface 11 of the transverse segment 10, including the projection 21 and the tilting edge 18, is shaped by the working surface 41 of the supporting member 40 and the rear main surface 12 of the transverse segment 10, including the hole 22, is shaped by the working surface 31 of the cutting member 30. This particular arrangement of the cutting member 30 and of the supporting member 40 may, however, be reversed, or the supporting member 40 may be omitted altogether. In this latter case, the projection 21, the hole 22 and the tilting edge 18 are formed in a separate process step, i.e. preceding and/or following the actual cutting of the transverse segment 10 from the basic material 50.

It is a well-known feature of the above-described blanking process that, at least to form the tilting edge 18, a substantial pressure is exerted on the front main face 11 of the transverse segment 10. By such exerted pressure, the basic material is plastically deformed, whereby material is displaced away from the tilting edge 18 being formed. By providing the step 20 already in the basic material 50, at least the radial extent of the material that is to be displaced to correctly form or shape the tilting edge 18 is reduced, at least relative to a basic material that is without such step 20 and, for example, shows a uniform, rectangular cross-section. As a consequence of the lesser extent of the plastic deformation also the exerted pressure is reduced making this part of the blanking process easier to perform and/or control.

This known setup of the process for forming the tilting edge 18 in the transverse segment 10 is schematically illustrated in the drawing figure 6, whereof part 6A provides a cross-section of a

part of the basic material 50 in its unprocessed shape and part 6B shows the same cross-section, however, after the tilting edge 18 has been pressed into the basic material 50 by the supporting member 40 of the blanking device 60. In figure 6A a part of the basic material 50 that is displaced to form the tilting edge 18 is indicated by the dotted area PD1. Furthermore, in figure 6A the outlined arrows indicate only the closing of the blanking device wherein the supporting member 40 is brought into contact with the front main surface 11 of the transverse segment 10. However, as explained in relation figure 5, although during the actual blanking of the transverse segment 10 the supporting member 40 is pressed against the front main surface 11 thereof, the cutting member 30 and the supporting member 40 actually move in the opposite direction relative to basic material 50 to separate the transverse segment there from.

For reference purposes the supporting surface 16 that will be formed when the transverse element 10 is actual cut from the basic material 50 is also indicated in the figures 6A and 6B (as well as in the following figures 8, 9A and 9B) by the dashed line. Furthermore, in figure 7, the full cross-section of the basic material 50 in its unprocessed shape and a front view of the strip of basic material 50 are shown in relation to the transverse member 10 to be shaped and cut there from. The dotted circle C in figure 7 indicates the part of the unprocessed basic material 50 that is illustrated in more detail in the figure 6A (as well as in the following figure 8).

In figure 8 it is illustrated, in a cross-section of the basic material 50 similar to that of figure 6A, that if the tilting edge 18 is moved farther from the step 20 and closer to the supporting surface 16, that the part PD2 of the basic material 50 that needs to be displaced to form the tilting edge 18, i.e. the dotted area PD2, becomes increasingly larger. Thus, also the pressure to be exerted by the supporting member 40 on the basic material 50 in the blanking process disadvantageously increases as well.

Thus by reducing the pressure to be exerted to from the tilting edge 18, the accuracy of the blanking process as a whole and/or a maximally attainable vertical separation between the step 20 and the tilting edge 18 can be favourably improved upon.

According to the present disclosure and illustrated in figure 9, the basic material 50 is provided not only with the step 20 but also with a taper 25 that provides the basic material 50 with a gradually increasing thickness adjacent to and continuing from the stepwise thickness increase that is provided by the step 20 thereof. By this measure, i.e. by providing the basic material 50 with the taper 25 adjacent to the step 20, favourably less material needs to be displaced to form the tilting edge 18 at a given distance from the step 20, as illustrated in the drawing figure 10. In the figure part 10A the material of the basic material 50 that is to be displaced to form the tilting edge 18 is indicated by the dotted area PD3. This dotted area PD3 in figure 10A is much smaller than the dotted area PD2 in figure 8, even though in these respective figures, the tilting edge 18 is located at the same distance from the step 20.

It may be noted that by providing the taper 25 in the basic material 50, the height of the step 20 thereof reduces as a consequence, since the overall thickness change of the basic material 50 from below the step 20 to above the tilting edge 18 (to be formed therein) is, preferably, unaffected. Furthermore, the taper 25 of the basic material 50 should be stronger, i.e. show a steeper incline, then the corresponding tapering 19 (see figure 9) of the finally formed front main face 11 of the transverse element 10.

The present disclosure, in addition to the entirety of the preceding description and all details of the accompanying figures, also concerns and includes all the features of the appended set of claims. Bracketed references in the claims do not limit the scope thereof, but are merely provided as non-binding examples of the respective features. The claimed features can be applied separately in a given product or a given process, as the case may be, but it is also possible to apply any combination of two or more of such features therein.

The invention(s) represented by the present disclosure is (are) not limited to the embodiments and/or the examples that are explicitly mentioned herein, but also encompasses amendments, modifications and practical applications thereof, in particular those that lie within reach of the person skilled in the relevant art.

CONCLUSIES

1. Basismateriaal (50) voor een dwarssegment (10) voor een drijfriem (6) met een aantal van dergelijk dwarssegmenten (10) die worden gedragen door tenminste één ring (8) van de drijfriem (10), welk dwarssegment (10) in een stansproces uit het basismateriaal (50) wordt gestanst en wordt voorzien van een zich in de breedterichting over het dwarssegment (10) uitstrekkend en loodrecht op die breedterichting, convex gekromd oppervlak (18), met het kenmerk, dat in het basismateriaal (50) een trap (20) is voorzien, ter plaatse waarvan een dikte van het basismateriaal stapsgewijs veranderd, en tevens een schuinte (25) is voorzien, ter plaatse waarvan een dikte van het basismateriaal (50) geleidelijk veranderd.

2. Het basismateriaal (50) volgens de conclusie 1, met het kenmerk, dat de schuinte (25) althans nagenoeg aanluit op de trap (20) en wel zodanig dat ter plaatse van de schuinte (25) de dikte van het basismateriaal (50) toeneemt in een richting die samenvalt met een richting waarin deze stapsgewijs toeneemt ter plaatse van de trap (20).

3. Het basismateriaal (50) volgens de conclusie 2, met het kenmerk, dat de schuinte (25) zich in de genoemde richting tussen de 0,09 en de 0,37 mm in het basismateriaal (50) uitstrekt.

4. Het basismateriaal (50) volgens de conclusie 1, 2 of 3, met het kenmerk, dat het dwarssegment (10) in dikterichting daaruit wordt gestanst.

5. Het basismateriaal (50) volgens een of meer van de voorgaande conclusies, met het kenmerk, dat dit in hoofdzaak van een stripvorm is voorzien en dat zowel de trap (20) als de schuinte zich tenminste in de lengterichting van het stripvormige basismateriaal (50) daarin uitstrekken.

6. Het basismateriaal (50) volgens de conclusie 5, met het kenmerk, dat de breedterichting van het dwarssegment (10) althans nagenoeg samenvalt met de lengterichting van het basismateriaal

(50).

7. Het basismateriaal (50) volgens een of meer der voorgaande conclusies, met het kenmerk, dat een grootste dikte daarvan tussen de 1 mm en de 2 mm bedraagt, dat de trap (20) een stapsgewijze dikte verandering van/in het basismateriaal (50) van tussen de 0,1 mm en de 0,5 mm vertegenwoordigt en dat de dikte van het basismateriaal (50) ter plaatse van de schuinte (25) tussen de 0,1 en de 0,4 mm verandert.

8. Werkwijze voor het uit een basismateriaal (50) stansen van een dwarssegment (10) voor een drijfriem (6) met een aantal van dergelijk dwarssegmenten (10) die worden gedragen door tenminste één ring (8) van de drijfriem (10), welk dwarssegment (10) is voorzien van een zich in de breedterichting over het dwarssegment (10) uitstrekkend en loodrecht op die breedterichting, convex gekromd oppervlak (18), waarin een deel van het basismateriaal (50) tussen een snijder (30) en een ondersteuning (40) wordt geklemd en ten opzichte van een naastgelegen deel van het basismateriaal (50) in de dikterichting daarvan wordt verplaatst en daarbij van dat naastgelegen deel wordt losgesneden, met het kenmerk, dat daarin het basismateriaal (50) volgens een of meer der voorgaande conclusies wordt toegepast.

9. De werkwijze volgens de conclusie 8, met het kenmerk, dat daarin het convex gekromde oppervlak (18) van het dwarssegment (10) buiten en bij voorkeur direct naast de schuinte (25) van het basismateriaal (50) wordt gevormd.

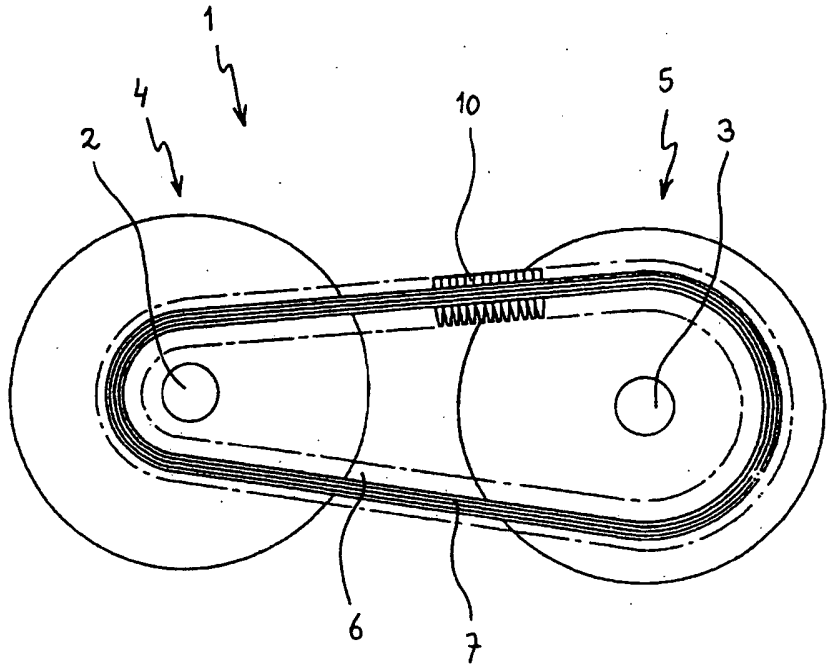

Fig. 1

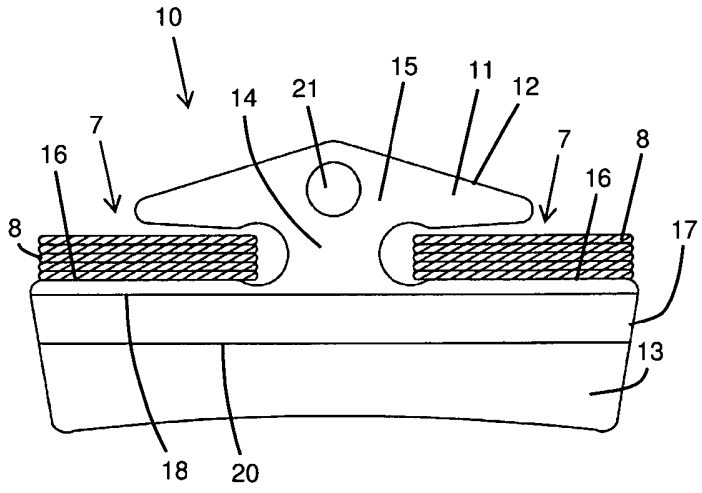

Fig. 2

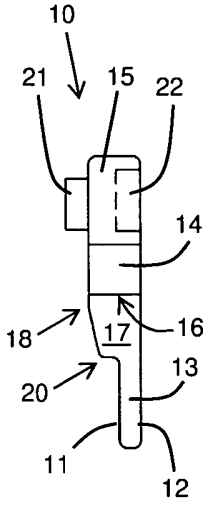

Fig. 3

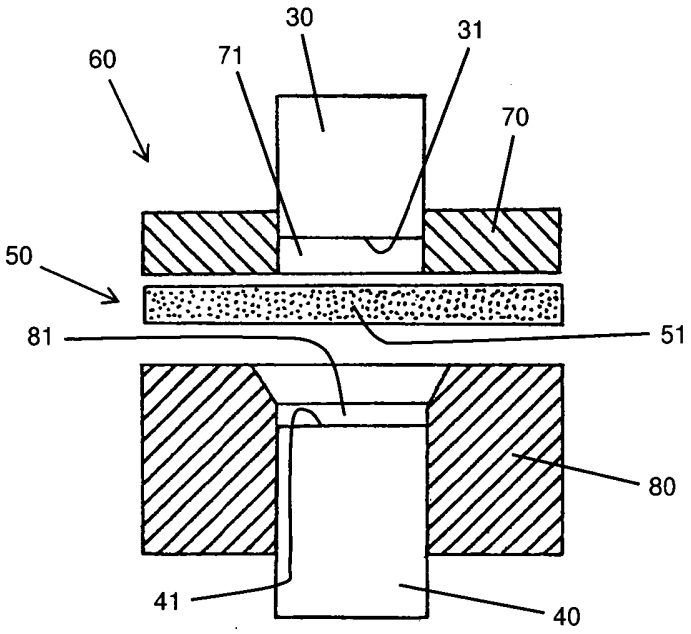

Fig. 4

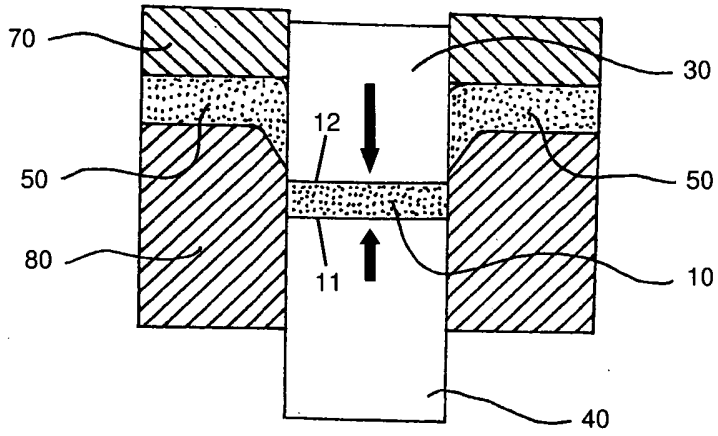

Fig. 5

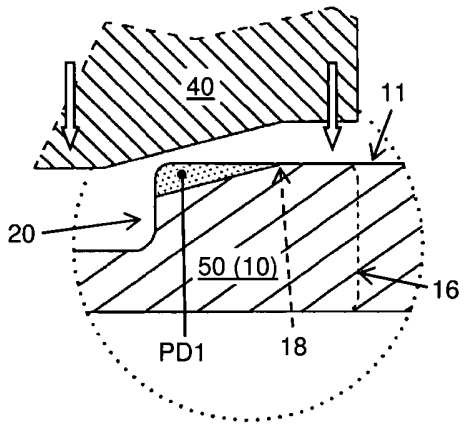

Fig. 6A

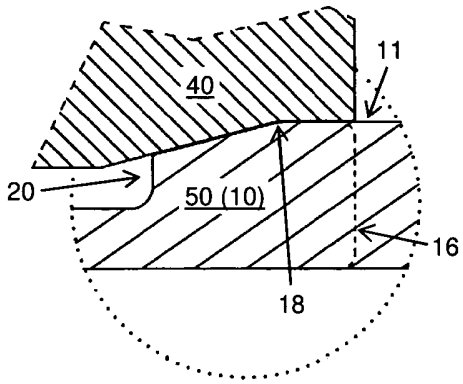

Fig. 6B

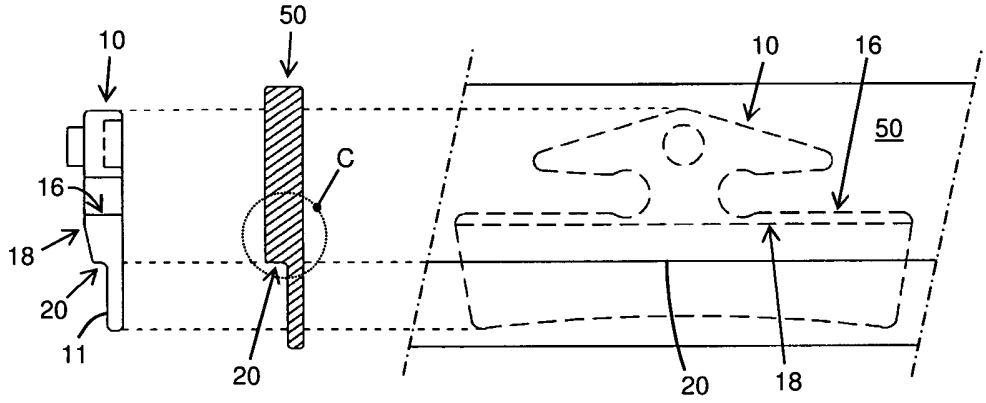

Fig. 7

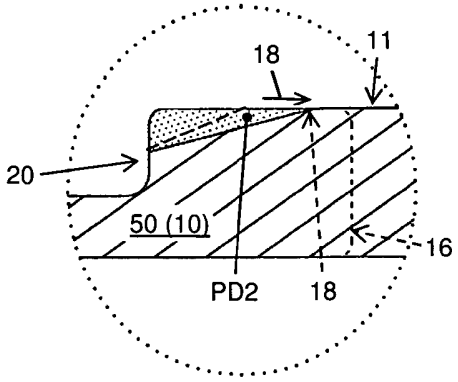

Fig. 8

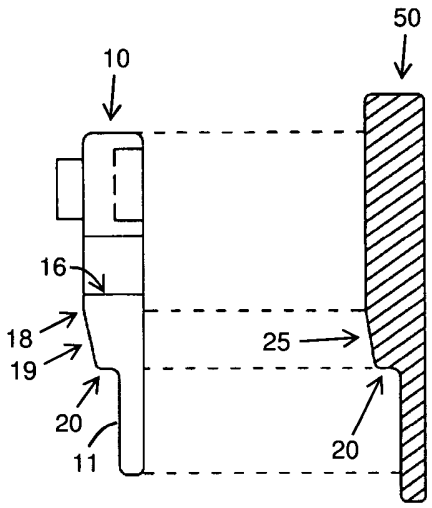

Fig. 9

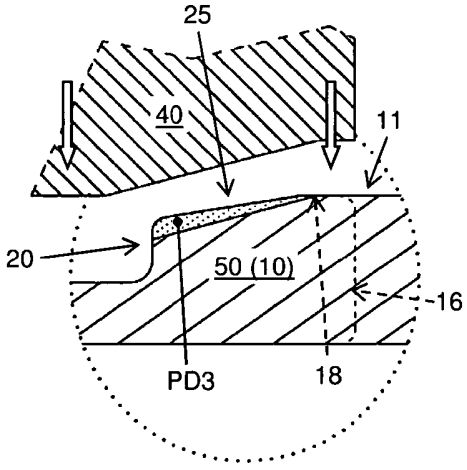

Fig. 10A

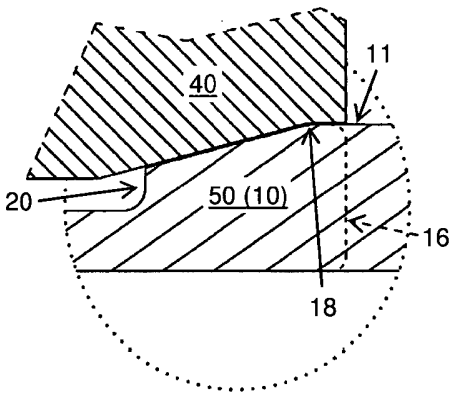

Fig. 10B

SAMENWERKINGSVERDRAG (PCT)

RAPPORT BETREFFENDE NIEUWHEIDSONDERZOEK VAN INTERNATIONAAL TYPE

IDENTIFICATIE VAN DE NATIONALE AANVRAGE	KENMERK VAN DE AANVRAGER OF VAN DE GEMACHTIGDE
	R.353507/PD
Nederlands aanvraag nr. **1040585**	Indieningsdatum **02-01-2014**
	Ingeroepen voorrangsdatum
Aanvrager (Naam) **Robert Bosch GmbH**	
Datum van het verzoek voor een onderzoek van internationaal type **08-03-2014**	Door de Instantie voor Internationaal Onderzoek aan het verzoek voor een onderzoek van internationaal type toegekend nr. **SN61631**

I. CLASSIFICATIE VAN HET ONDERWERP (bij toepassing van verschillende classificaties, alle classificatiesymbolen opgeven)

Volgens de internationale classificatie (IPC)

F16G5/16;B21D28/06;B21D53/14

II. ONDERZOCHTE GEBIEDEN VAN DE TECHNIEK

Onderzochte minimumdocumentatie

Classificatiesysteem	Classificatiesymbolen
IPC	**F16G;B21D**

Onderzochte andere documentatie dan de minimum documentatie, voor zover dergelijke documenten in de onderzochte gebieden zijn opgenomen

III. ☐ **GEEN ONDERZOEK MOGELIJK VOOR BEPAALDE CONCLUSIES** (opmerkingen op aanvullingsblad)

IV. ☐ **GEBREK AAN EENHEID VAN UITVINDING** (opmerkingen op aanvullingsblad)

ONDERZOEKSRAPPORT BETREFFENDE HET RESULTAAT VAN HET ONDERZOEK NAAR DE STAND VAN DE TECHNIEK VAN HET INTERNATIONALE TYPE

Nummer van het verzoek om een onderzoek naar de stand van de techniek
NL 1040585

A. CLASSIFICATIE VAN HET ONDERWERP
INV. F16G5/16 B21D28/06 B21D53/14
ADD.

Volgens de Internationale Classificatie van octrooien (IPC) of zowel volgens de nationale classificatie als volgens de IPC.

B. ONDERZOCHTE GEBIEDEN VAN DE TECHNIEK

Onderzochte miminum documentatie (classificatie gevolgd door classificatiesymbolen)
F16G B21D

Onderzochte andere documentatie dan de mimimum documentatie, voor dergelijke documenten, voor zover dergelijke documenten in de onderzochte gebieden zijn opgenomen

Tijdens het onderzoek geraadpleegde elektronische gegevensbestanden (naam van de gegevensbestanden en, waar uitvoerbaar, gebruikte trefwoorden)
EPO-Internal

C. VAN BELANG GEACHTE DOCUMENTEN

Categorie °	Geciteerde documenten, eventueel met aanduiding van speciaal van belang zijnde passages	Van belang voor conclusie nr.
X	EP 1 132 648 A1 (HONDA MOTOR CO LTD [JP]) 12 september 2001 (2001-09-12) * alinea [0019] - alinea [0033]; conclusie 1; figuren 1-6 *	1-9
A	JP 2006 043719 A (TOYOTA MOTOR CORP) 16 februari 2006 (2006-02-16) * figuren 1-7 *	1-9
A	EP 1 128 088 A1 (HONDA MOTOR CO LTD [JP]) 29 augustus 2001 (2001-08-29) * figuren 1-10 *	1
A	WO 2013/121500 A1 (AISIN AW CO [JP]; CVTEC CO LTD [JP]; KAKIUCHI MIYOSHI [JP]; FUJIMOTO K) 22 augustus 2013 (2013-08-22) * figuren 3-5 *	1

☐ Verdere documenten worden vermeld in het vervolg van vak C.

☒ Leden van dezelfde octrooifamilie zijn vermeld in een bijlage

° Speciale categorieën van aangehaalde documenten

"A" niet tot de categorie X of Y behorende literatuur die de stand van de techniek beschrijft

"D" in de octrooiaanvrage vermeld

"E" eerdere octrooi(aanvrage), gepubliceerd op of na de indieningsdatum, waarin dezelfde uitvinding wordt beschreven

"L" om andere redenen vermelde literatuur

"O" niet-schriftelijke stand van de techniek

"P" tussen de voorrangsdatum en de indieningsdatum gepubliceerde literatuur

"T" na de indieningsdatum of de voorrangsdatum gepubliceerde literatuur die niet bezwarend is voor de octrooiaanvrage, maar wordt vermeld ter verheldering van de theorie of het principe dat ten grondslag ligt aan de uitvinding

"X" de conclusie wordt als niet nieuw of niet inventief beschouwd ten opzichte van deze literatuur

"Y" de conclusie wordt als niet inventief beschouwd ten opzichte van de combinatie van deze literatuur met andere geciteerde literatuur van dezelfde categorie, waarbij de combinatie voor de vakman voor de hand liggend wordt geacht

"&" lid van dezelfde octrooifamilie of overeenkomstige octrooipublicatie

Datum waarop het onderzoek naar de stand van de techniek van internationaal type werd voltooid	Verzenddatum van het rapport van het onderzoek naar de stand van de techniek van internationaal type
31 oktober 2014	

Naam en adres van de instantie	De bevoegde ambtenaar
European Patent Office, P.B. 5818 Patentlaan 2 NL - 2280 HV Rijswijk Tel. (+31-70) 340-2040, Fax: (+31-70) 340-3016	Simens, Mark Phil

Formulier PCT/ISA/201 (tweede blad) (Januari 2004)

ONDERZOEKSRAPPORT BETREFFENDE HET RESULTAAT VAN HET ONDERZOEK NAAR DE STAND VAN DE TECHNIEK VAN HET INTERNATIONALE TYPE

Informatie over leden van dezelfde octrooifamilie

Nummer van het verzoek om een onderzoek naar de stand van de techniek
NL 1040585

In het rapport genoemd octrooigeschrift	Datum van publicatie	Overeenkomend(e) geschrift(en)	Datum van publicatie
EP 1132648	A1 12-09-2001	DE 60102087 D1	01-04-2004
		DE 60102087 T2	15-07-2004
		EP 1132648 A1	12-09-2001
		JP 3703678 B2	05-10-2005
		JP 2001246428 A	11-09-2001
		US 2001018843 A1	06-09-2001
JP 2006043719	A 16-02-2006	GEEN	
EP 1128088	A1 29-08-2001	DE 60102958 D1	03-06-2004
		DE 60102958 T2	07-04-2005
		EP 1128088 A1	29-08-2001
		US 2001022102 A1	20-09-2001
WO 2013121500	A1 22-08-2013	CN 104080557 A	01-10-2014
		EP 2783771 A1	01-10-2014
		WO 2013121500 A1	22-08-2013

WRITTEN OPINION

File No.	Filing date *(day/month/year)*	Priority date *(day/month/year)*	Application No.
SN61631	02.01.2014		NL1040585

International Patent Classification (IPC)
INV. F16G5/16 B21D28/06 B21D53/14

Applicant
Robert Bosch GmbH

This opinion contains indications relating to the following items:

- ☒ Box No. I Basis of the opinion
- ☐ Box No. II Priority
- ☐ Box No. III Non-establishment of opinion with regard to novelty, inventive step and industrial applicability
- ☐ Box No. IV Lack of unity of invention
- ☒ Box No. V Reasoned statement with regard to novelty, inventive step or industrial applicability; citations and explanations supporting such statement
- ☐ Box No. VI Certain documents cited
- ☒ Box No. VII Certain defects in the application
- ☐ Box No. VIII Certain observations on the application

	Examiner
	Simens, Mark Phil

Application number

WRITTEN OPINION

NL1040585

Box No. I Basis of this opinion

1. This opinion has been established on the basis of the latest set of claims filed before the start of the search.

2. With regard to any **nucleotide and/or amino acid sequence** disclosed in the application and necessary to the claimed invention, this opinion has been established on the basis of:

   a. type of material:

   ☐ a sequence listing

   ☐ table(s) related to the sequence listing

   b. format of material:

   ☐ on paper

   ☐ in electronic form

   c. time of filing/furnishing:

   ☐ contained in the application as filed.

   ☐ filed together with the application in electronic form.

   ☐ furnished subsequently for the purposes of search.

3. ☐ In addition, in the case that more than one version or copy of a sequence listing and/or table relating thereto has been filed or furnished, the required statements that the information in the subsequent or additional copies is identical to that in the application as filed or does not go beyond the application as filed, as appropriate, were furnished.

4. Additional comments:

Box No. V Reasoned statement with regard to novelty, inventive step or industrial applicability; citations and explanations supporting such statement

1. Statement

Novelty	Yes:	Claims	3, 7
	No:	Claims	1, 2, 4-6, 8, 9
Inventive step	Yes:	Claims	
	No:	Claims	1-9
Industrial applicability	Yes:	Claims	1-9
	No:	Claims	

2. Citations and explanations

see separate sheet

WRITTEN OPINION

Box No. VII Certain defects in the application

see separate sheet

Re Item V

Reasoned statement with regard to novelty, inventive step or industrial applicability; citations and explanations supporting such statement

1 Prior art

Reference is made to the following documents:

D1 EP 1 132 648 A1 (HONDA MOTOR CO LTD [JP]) 12 september 2001 (2001-09-12)

D2 JP 2006 043719 A (TOYOTA MOTOR CORP) 16 februari 2006 (2006-02-16)

D3 EP 1 128 088 A1 (HONDA MOTOR CO LTD [JP]) 29 augustus 2001 (2001-08-29)

2 Novelty objections

The present application does not meet the criteria of patentability, because the subject-matter of claims 1 and 8 is not new.

2.1

2.1.1

D1 discloses

Basismateriaal (see figure 2b) voor een dwarssegment (see figure 1) voor een drijfriem (see claim 1) met een aantal van dergelijk dwarssegmenten die worden gedragen door tenminste één ring van de drijfriem, welk dwarssegment in een stansproces uit het basismateriaal wordt gestanst (see claim 1) en wordt voorzien van een zich in de breedterichting over het dwarssegment uitstrekkend en loodrecht op die breedterichting, convex gekromd oppervlak (see figure 5, reference signs 6 and 7), waarbij in het basismateriaal een trap (see figure 2b, reference sign 14) is voorzien, ter plaatse waarvan een dikte van het basismateriaal stapsgewijs veranderd, en tevens een schuinte (14; although figure 2b indicates a sharp corner it will always be rounded somewhat) is voorzien, ter plaatse waarvan een dikte van het basismateriaal (due to the rounding the thickness gradually changes) geleidelijk veranderd.

2.2 Claim 8

The same reasoning applies, mutatis mutandis, to the subject-matter of the corresponding independent claims 8, which therefore is also considered not new.

2.3 Dependent claims

Dependent claims 2-7,9 do not contain any features which, in combination with the features of any claim to which they refer, meet the requirements in respect of novelty and/or inventive step either because the additional features of these claims are also

disclosed for similar assemblies (see documents D1-D2 and the corresponding passages cited in the search report) or because they relate to simple constructional details that the skilled person would normally contemplate without the exercise of any inventive activity.

Re Item VII

Certain defects in the application

3

3.1

The relevant background art disclosed in D1 and D2 is not mentioned in the description, nor are these documents identified therein.