March 12, 1935. E. A. MARTINEK 1,994,284

DRIER FOR PHOTOGRAPHIC PRINTS

Filed Sept. 25, 1931 2 Sheets-Sheet 1

Fig. 3

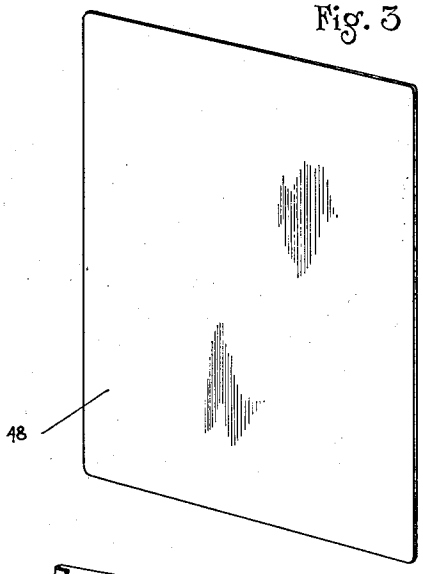

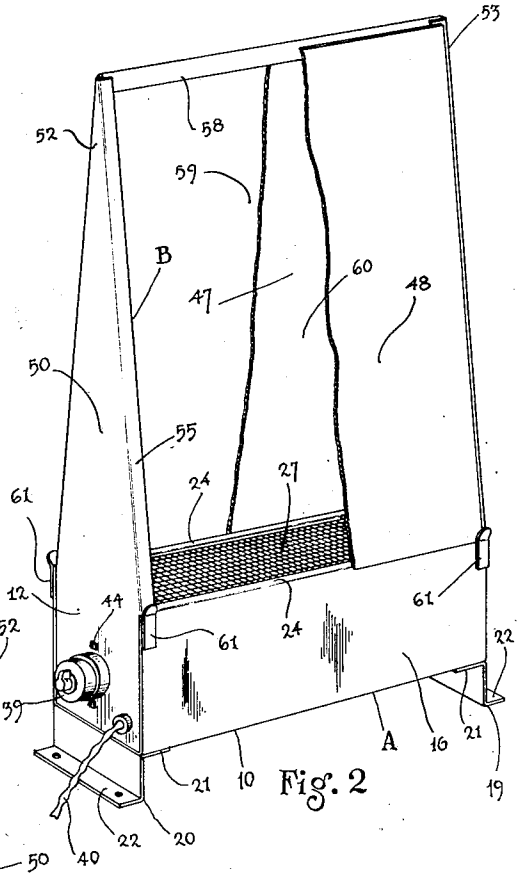

Fig. 2

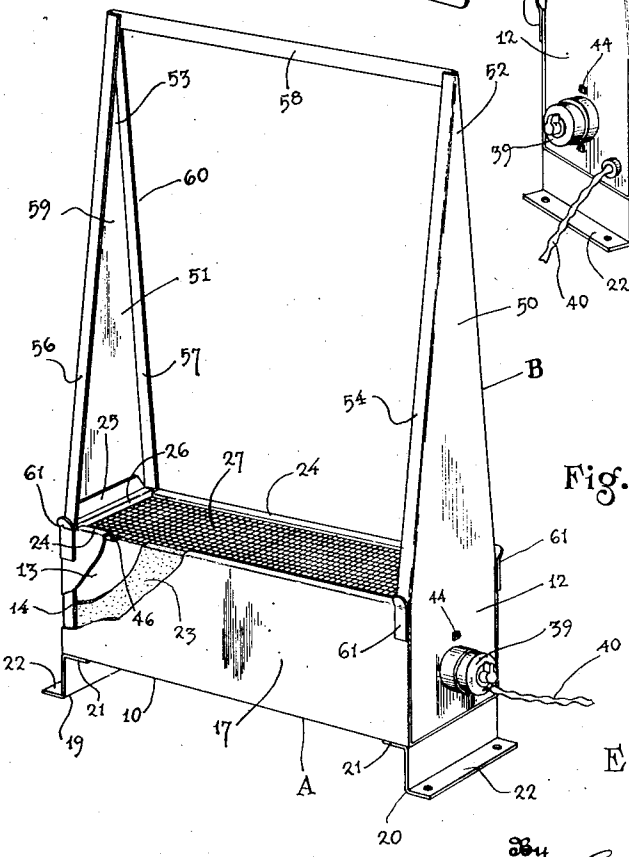

Fig. 1

Inventor

Edward A. Martinek

By Bowell + Lagaard

Attorneys

March 12, 1935. E. A. MARTINEK 1,994,284

DRIER FOR PHOTOGRAPHIC PRINTS

Filed Sept. 25, 1931 2 Sheets-Sheet 2

Fig. 4

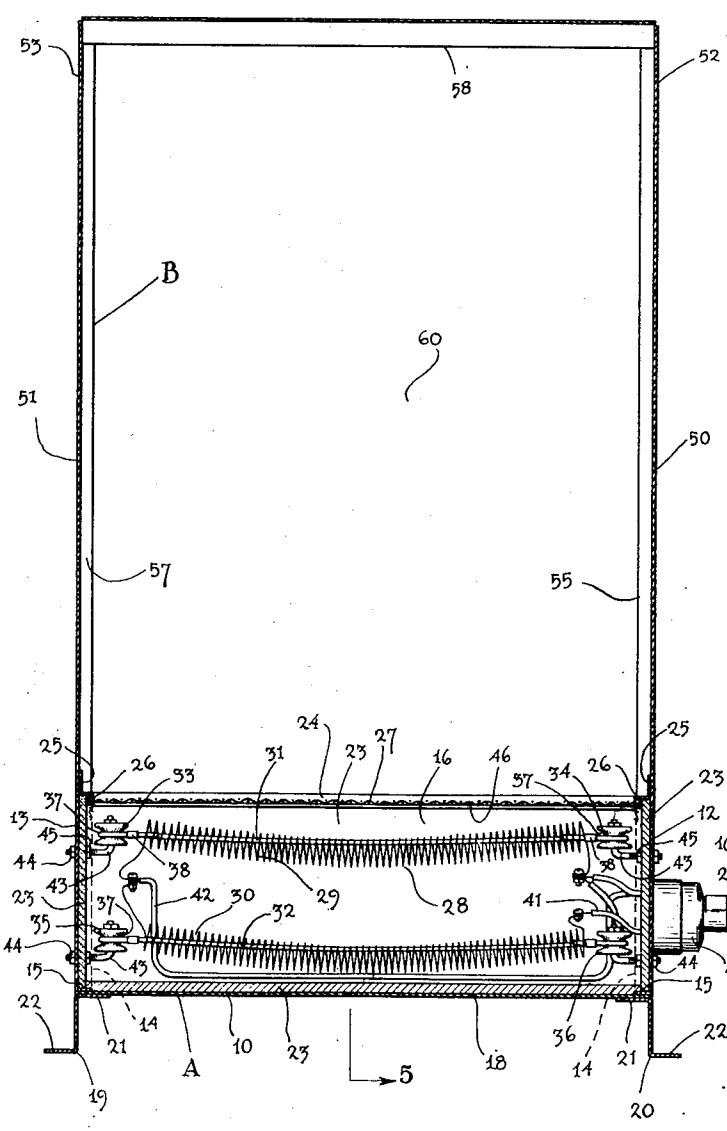

Fig. 5

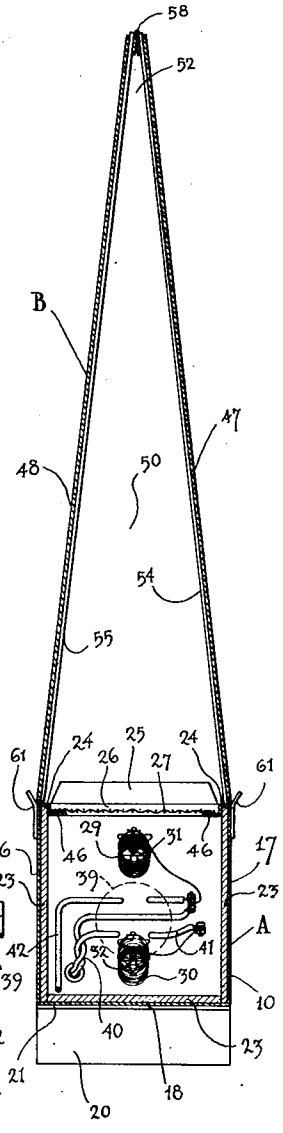

Inventor

Edward A. Martinek

By Lowell & Lagaard

Attorneys

Patented Mar. 12, 1935 1,994,284

UNITED STATES PATENT OFFICE

1,994,284

DRIER FOR PHOTOGRAPHIC PRINTS

Edward A. Martinek, Minneapolis, Minn.

Application September 25, 1931, Serial No. 565,074

4 Claims. (Cl. 34—26)

My invention relates to driers and particularly to driers for photographic prints and has for its object to provide a drier in which prints may be quickly and efficiently dried.

Another object of the invention resides in providing a drier by means of which glossy prints may be readily made.

An object of the invention resides in providing a drier having a heating chamber in which a squeegee plate forms a part thereof.

Another object of the invention resides in employing a heater for providing heated air within the heating chamber.

An object of the invention resides in providing a box-like heater having an opening therein, and in employing a squeegee plate for closing said opening.

Another object of the invention resides in disposing said opening so that the squeegee plate is held, by gravity, in position closing said opening.

A feature of the invention resides in arranging the squeegee plate in a slightly inclined position from the vertical so that the prints placed thereon readily drop from the plate after they have become dried.

An object of the invention is to provide a drier of the present character in which a heater is incorporated in the box-like structure at the lower portion thereof.

Another object of the invention resides in constructing the drier with two upwardly tapered end walls against which two squeegee plates may be placed in inclined position to form side walls of the structure.

Other objects of the invention reside in the novel combination and arrangement of parts and in the details of construction hereinafter illustrated and/or described.

In the drawings:

Fig. 1 is a perspective view of a drier viewed from one side thereof and illustrating an embodiment of my invention with a portion thereof broken away.

Fig. 2 is a perspective view of the drier viewed from the opposite side thereof and illustrating the squeegee plates applied thereto.

Fig. 3 is a perspective view of one of the squeegee plates.

Fig. 4 is a longitudinal elevational sectional view of the drier.

Fig. 5 is a cross sectional view taken on line 5—5 of Fig. 4.

In the making of glossy photographic prints, the customary practice is to place the wet prints, face down, upon a squeegee plate and then apply sufficient pressure to the plate and prints to squeeze the greater part of the water therefrom. Thereafter the plates are held in spaced relation by any available means so that currents of air may pass over the prints and dry the same. The present invention provides a simple, compact and inexpensive drier in which heat is conveniently and advantageously applied to squeegee plates so as to rapidly and efficiently dry the prints.

My invention comprises a heater indicated in its entirety at A, together with a box-like superstructure indicated at B, which constitutes a heating chamber by means of which the squeegee plates are heated to cause the drying of the prints placed thereon.

The heater A comprises a case 10, which consists of two end walls 12 and 13 formed with inwardly extending flanges 14 (Fig. 1) along the sides thereof and with inwardly extending flanges 15 at the lowermost edges thereof. To the end walls 12 and 13 are attached side walls 16 and 17, the connection being secured through the flanges 14. The case 10 further comprises a bottom 18 which is attached to the flanges 15 of said end walls, forming an enclosure for the heating element which will be presently described. The bottom 18 is preferably formed integrally with the side walls 16 and 17, as illustrated. At the ends of the bottom 18 are provided two legs 19 and 20 which are formed with flanges 21 attached to the bottom 18 and which are further formed with other flanges 22, serving as feet, whereby the entire structure may be supported upon a table or other suitable surface.

In the description of my invention, I have shown the various parts as welded together, either by spot welding or otherwise, though it will be readily comprehended that riveting may be employed or that the parts may be secured together in any other suitable manner.

The interior of the case A is lined with a liner 23 of heat insulating material, such as asbestos composition or other suitable material. This lining protects the two sides 16 and 17 and the ends 12 and 13 of the box as well as the bottom 18 thereof. The liner 23 is covered and held in place at its upper edges along the sides of the case by lips 24 which are formed from the upper marginal material of the sides 16 and 17. At the ends of the case, two strips 25, which are formed with overhanging flanges 26 cover the upper edges of the liner 23 and hold

it in place. The case 10 is covered by means of a wire screen 27 which protects the heating elements within the case, but which allows the heated air to circulate readily therethrough. This screen is supported upon rests 46 formed on the lips 24 and flanges 26 at the sides and ends of the case 10.

The heating element is indicated in its entirety at 28 in the drawings and consists of two coils 29 and 30 of a suitable resistance wire, space wound and supported upon two cords 31 and 32 constructed of insulating material. These cords are strung from end to end of the case 10 and are attached to suitable insulators 33, 34, 35 and 36 mounted in the case. These insulators are supported on angle brackets 43, which are threaded at their ends and extend through the two end walls 12 and 13. Nuts 44 and 45 screwed upon these brackets hold them rigidly with respect to the case. The insulators are preferably formed with grooves 37 therein about which the ends of said cords are looped, said cords being held attached to said insulators by means of clips 38.

Upon the exterior of the end wall 12 is mounted a multiple-way snap switch 39 having a number of contacts therein by means of which the two coils 29 and 30 may be connected with a suitable source of electric energy. Such switches being well known in the art, switch 39 has not been illustrated in detail. A flexible cord 40 is employed for connection to the source of electricity, one conductor of said cord being connected to the common contact of the switch 39 and the other conductor of which being connected to one end of the coil 28 and also to one of the contacts of said switch. The corresponding end of the coil 30 is connected through a conductor 41 with another contact of the switch, while the two opposite ends of the two coils are connected together and through a conductor 42 with the remaining contact of the switch. When the switch 39 is operated, current may be successively directed through the coils, first in series, then through one of the coils, and lastly through both of the coils in parallel. By means of this construction, three degrees of heat may be obtained so that the desired time of drying and the temperature of the squeegee plates may be adjusted at will.

In the construction of the box-like superstructure B forming the heating chamber, two squeegee plates 47 and 48 are employed. These plates each consist of a sheet of heat conducting metal which is formed with a highly polished surface procured through chromium plating the sheet and buffing the surface thereof, or through any other suitable treatment. The said plates may be finished on one side only if desired, which is the side on which the prints are to be placed. The box-like structure B further includes two end walls 50 and 51 which extend upwardly from the ends of the case 10 and which are preferably formed as part of the end walls 12 and 13 of said case. Said two end walls 50 and 51 are preferably triangular in formation, converging in an upward direction. Along the converging edges of these end walls are formed inwardly extending flanges 54, 55, 56 and 57. Between these flanges at the vertexes 52 and 53 of the end walls 50 and 51 is a bar 58, which is secured at its ends to said walls in any suitable manner. The flanges 54 and 56 lie in a common plane and likewise the flanges 55 and 57 defining openings 59 and 60 at the sides of the box-like structure B. The two squeegee plates 47 and 48 are of such dimensions as to rest upon the flanges of the end walls 50 and 51 and to overlie the upper edges of side walls 16 and 17 of the case A and the bar 58, whereby the said two openings 59 and 60 are completely closed when said plates are applied. The two squeegee plates 47 and 48 are supported at their lower edges by means of clips or rests 61 which are secured to the sides of the case 10.

In the use of my invention, the prints are first prepared in the usual manner by developing and fixing and after having been properly washed are placed while wet, face down, upon the polished surfaces of the two squeegee plates 47 and 48. When these plates have been covered with prints, they are run through a wringer or other suitable water extracting device with the result that the prints are pressed firmly against the surfaces of said squeegee plates and the excess water removed therefrom. Thereafter the two plates are placed edgewise upon the clips or rests 61 in position with their upright margins bearing upon the flanges on the end walls 50 and 51. The prints, of course, are disposed upon the exterior surfaces of the squeegee plates. The current is then turned on through the switch 39. As the heating elements become hot, the squeegee plates are heated, the prints thereon clinging thereto until they become sufficiently dry to drop off by their own weight. Thereafter, the prints may be picked up by the attendant. When the prints are dried in this manner, the sensitized surfaces thereof become extremely glossy and the said prints remain fairly flat. As soon as all of the prints have fallen from the plates, other plates on which other prints have been placed may be substituted and the process repeated. In this manner, the heater may be kept going continuously and the prints rapidly and efficiently dried.

The flanges on the end walls 50 and 51 of the device support the two plates 47 and 48 in oppositely inclined positions. With this arrangement, the plates are merely placed upon the rests 60 and 61 and remain in position completing the box-like structure. No latching device is necessary for holding the plates in place and the said plates are easily and rapidly interchanged as the prints dry. By placing the heating element within the case situated below the heating chamber, the heat is readily transferred to the squeegee plates via the heated circulating air within the device.

Although I have shown and described an electric heating element, it will be readily comprehended that a gas or liquid fuel burner may be employed in lieu thereof.

The device is simple and effective in operation and will not readily get out of order. The heating elements can be constructed relatively strong so that danger of breaking and burning out is eliminated thereby lengthening the life of the same. The device occupies a minimum amount of space and a number of driers may be positioned in a bank adjacent one another and handled by a single operator. The case in which the heating element is disposed being insulated, the heat is all utilized for the purpose of drying, thereby greatly cutting down the consumption of current used in the operation of the drier.

Changes in the specific form of my invention as herein disclosed may be made within the scope of what is claimed, without departing from the spirit of my invention.

Having described my invention, what I claim as new and desire to protect by Letters Patent is:

1. In combination, a case having two end walls formed with their edges parallel at their lower ends and converging at their upper ends, side walls connecting said end walls at the parallel ends of the edges thereof and terminating at the beginning of the converging ends of said edges, a bottom connecting said ends and sides, a perforate guard disposed between said sides at their upper ends to form a compartment within the lower portion of the case, a heating element within said compartment, a bar at the upper ends of said end walls for connecting the same together, flanges on said end walls at the converging ends of the edges thereof, said flanges forming rests and lying substantially in planes containing the upper edges of said side walls and the lateral surfaces of said bar, squeegee plates engaging said rests and forming in conjunction with said end members a second compartment within said case and communicating with said first named compartment through said perforate guard, and means for supporting said squeegee plates in position to form said second compartment.

2. In a device of the character described, a box-like structure including end walls and side wall members connected together, the end walls extending upwardly beyond the side wall members and formed with converging edges, a combination brace and closure bar tying the end walls together at the vertexes thereof, other side wall members consisting of squeegee plates adapted, with wet prints applied thereto, to be run through a wringer, the edges of the end wall extensions at one side of the structure together with the corresponding face of said bar forming a rest for marginal portions of one plate and the edges of said end wall extensions at the other side of the structure together with the corresponding face of said bar forming a rest for marginal portions of the other plate, means at either side of the structure for supporting the squeegee plates in position leaning against said rests, and heating means within the structure.

3. In a device of the character described, a box-like structure including end walls and side wall members connected together, the end walls extending upwardly beyond the side wall portions and formed with converging edges, other side wall members consisting of squeegee plates adapted, with wet prints applied thereto, to be run through a wringer, the edges of the end wall extensions at one side of the structure forming a rest for opposite marginal portions of one plate and the edges of said end wall extensions at the other side of the structure forming a rest for opposite marginal portions of the other plate, means at either side of the structure for supporting the squeegee plates in position leaning against said rests, and heating means within the structure.

4. In a device of the character described, a box-like structure having end walls with the edges thereof at one side of the structure inclined from the vertical and having a side wall member consisting of a squeegee plate adapted, with wet prints applied thereto, to be run through a wringer, said inclined edges of the end walls forming a rest for opposite marginal portions of said squeegee plate, a footing for the lower edge of a squeegee plate disposed in position leaning against said rests, and heating means within the structure.

EDWARD A. MARTINEK.