# G. W. Griswold,

## Rotary Pump,

No. 16,875. Patented Mar. 24, 1857

Fig. 1.

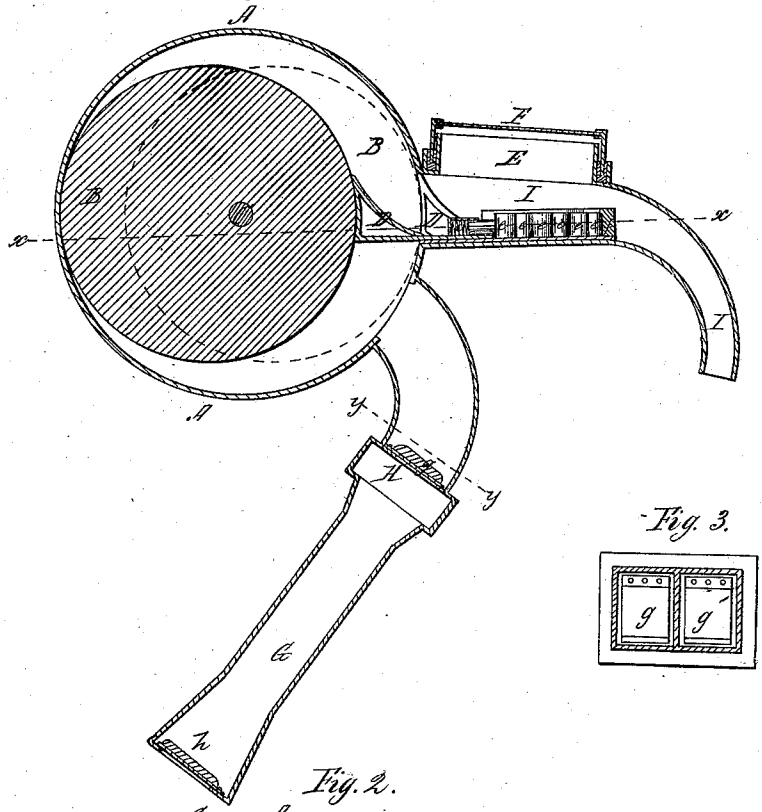


Fig. 3.




Fig. 2.

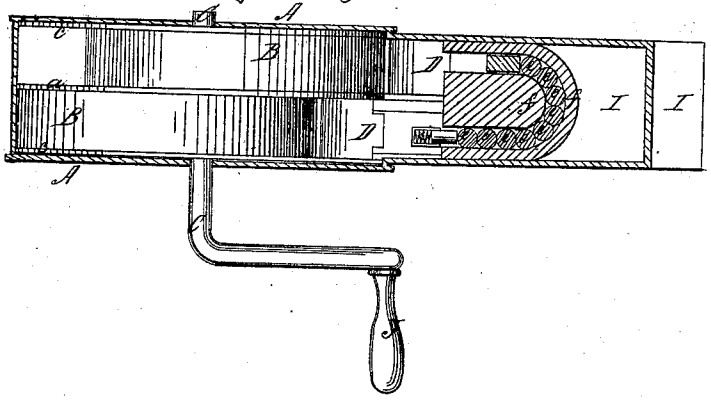


N. PETERS, PHOTO-LITHOGRAPHER, WASHINGTON, D. C.

# UNITED STATES PATENT OFFICE.

GEO. W. GRISWOLD, OF CARBONDALE, PENNSYLVANIA.

## ROTARY PUMP.

Specification of Letters Patent No. 16,875, dated March 24, 1857.

*To all whom it may concern:*

Be it known that I, GEORGE W. GRISWOLD, of Carbondale, in the county of Luzerne, and State of Pennsylvania, have invented certain new and useful Improvements in Rotary Pumps; and I do hereby declare the following to be a full, clear, and exact description of the same, reference being had to the accompanying drawings, making a part of this specification, in which—

Figure 1, represents a section through the pump vertically. Fig. 2, represents a horizontal section through the line *x*, and Fig. 3 a cross section at the line *y*, of Fig. 1.

Similar letters of reference where they occur in the several figures denote like parts of the pump in all of them.

The nature of my invention relates more especially to the arrangement of the eccentrics within the drum or cylinder, and to the manner of operating the cut-offs in connection with said eccentrics—by which means I make a very simple, cheap, and efficient pump.

To enable others skilled in the art to make and use my invention, I will proceed to describe the same with reference to the drawings.

A, represents a drum or cylinder, which is entirely closed, except to the induction and eduction passages, as will be explained. Within this drum or cylinder are placed the eccentrics B, B, which are divided by a disk or plate *a*, and upon the outside of these eccentrics are placed disks, or plates *c*, *c*, which three plates or disks are concentric, and of the same diameter, as that of the inside of the drum or cylinder A.

The two eccentrics B, B, are placed diametrically opposite to each other on the shaft C—that is to say, so that the greatest throw or swell on the one, shall be diametrically opposite the lowest depression of the other eccentric, as seen in Figs. 1, 2. These two eccentrics, with their disks or plates *a*, *c*, may all be cast or wrought in one piece, and this one piece, constitutes the whole interior of the drum or cylinder which it should snugly fill. As there is no part of the eccentrics liable to derangement, the drum need never be opened, after once properly put together.

D, D, are two cut-offs—one for each eccentric. These cut-offs are operated by the eccentrics themselves—one eccentric keeping the cut-off of its fellow eccentric in action. The cut-offs operate in concert with each other, and with their eccentrics, through the series of rollers or small cylindrical pieces *e*, *e*, *e*, &c., extending from one to the other, said pieces being all separate, and rolling one against the other, so that as one eccentric pushes out its cut-off, that cut off pushes in its fellow, and of course these cut-offs, must conform to the exact peripheries of the eccentrics, as the eccentrics themselves work them. The rollers *e*, *e*, extend around in the circular ways *f f*, and as a greater number of them get into the straight line, they will be longer than when in the curve, this requires some compensation to equalize the difference. I do this by the introduction of a helical spring *i*, at one or both ends of the series, which yields to the lengthening or shortening of said series of rollers. Over these rollers, is a man hole, E through which they can be repaired, as well as the cut-offs, should they become disarranged in any manner. This man-hole or opening is covered by a cover F, with glass in it through which the operative parts may be clearly seen.

G, is the pipe or tube through which the water is drawn up, it having a foot valve *h*, in it. This pipe or tube is single up to the point H, from thence it is double, and each passage covered by a clack valve *g*, *g*, as seen in Fig. 3. The object of the double passages is that, each eccentric shall operate its own column of water—the two columns being united at the eduction passage I. The points of contact between the eccentrics and drum, being directly opposite to each other, it is obvious that as one eccentric diminishes its column of water, the other is enlarging its column, and vice versa, and thus the column is always uniform in volume.

The eccentrics and their flanges or disks, moving with the column of water, produce but little friction, hence the pump is easily worked. Instead of there being a single throw to each of the eccentrics, there may be two or more to each. The pump is operated by turning the handle J and the column of water thrown out by it, is uniform in volume, and delivered with great ease to the operator.

Having thus fully described the nature of my invention I would state that, I am aware that two separate eccentrics, with a fixed or stationary partition between them, have

been used in a pump cylinder; this I do not claim but

What I do claim herein as new, and desire to secure by Letters Patent is—

The double eccentrics, with their disks or plates formed in one piece when operating in a drum or cylinder substantially in the manner, and for the purpose herein set forth.

G. W. GRISWOLD.

Witnesses:
A. B. STOUGHTON,
H. A. CHAMBERS.