Nov. 20, 1934. H. BERG 1,981,494

CABINET CORNER CONSTRUCTION

Filed July 2, 1934 2 Sheets-Sheet 1

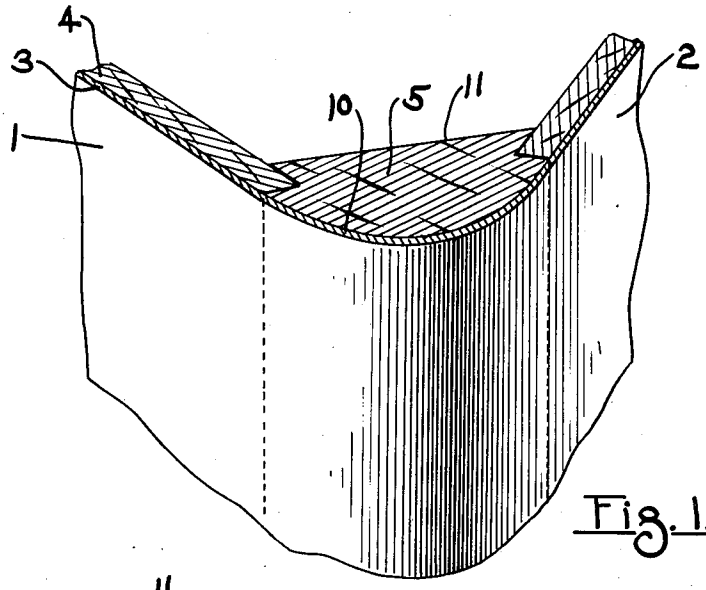

Fig. 1.

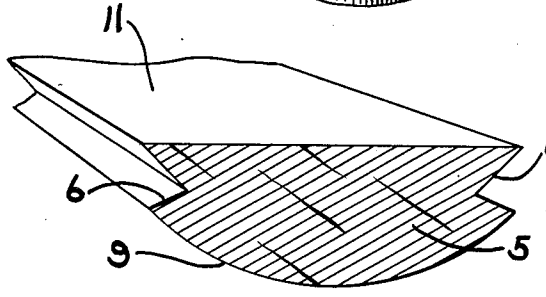

Fig. 2.

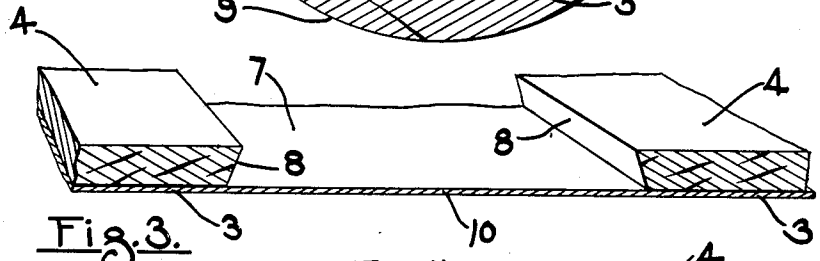

Fig. 3.

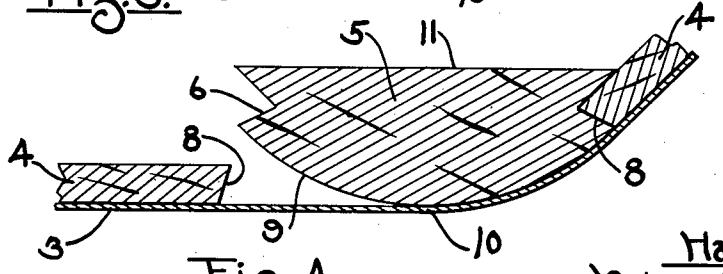

Fig. 4.

Inventor
Hans Berg
By Lawrance and Van Antwerp
Attorneys

Nov. 20, 1934. H. BERG 1,981,494

CABINET CORNER CONSTRUCTION

Filed July 2, 1934 2 Sheets-Sheet 2

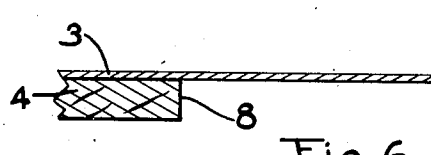

Fig. 6.

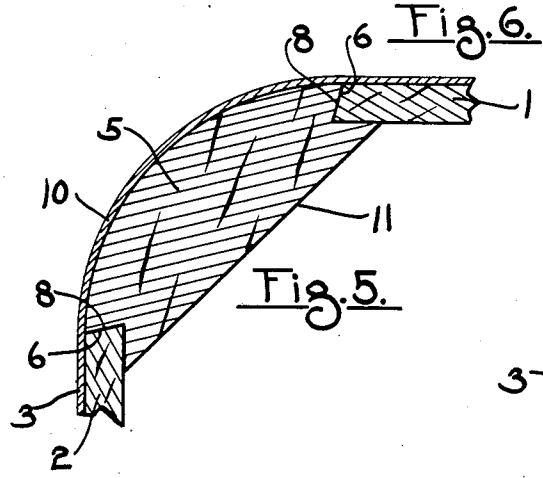

Fig. 5.

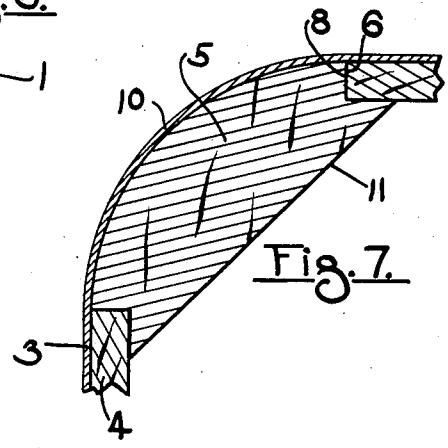

Fig. 7.

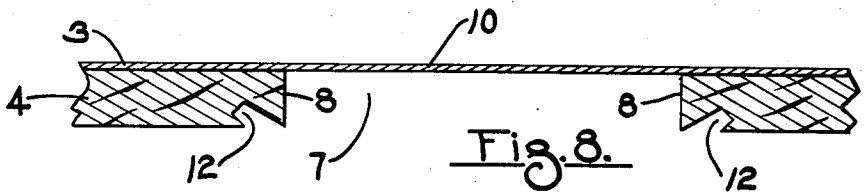

Fig. 8.

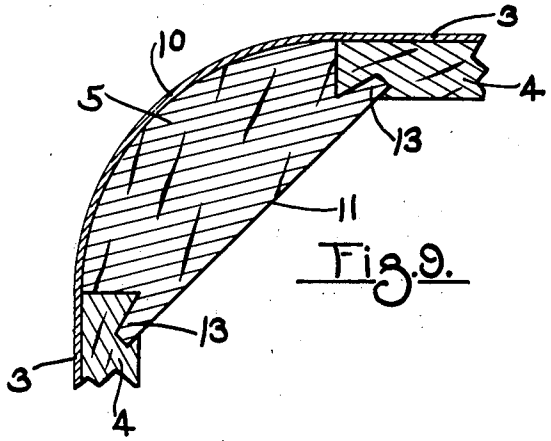

Fig. 9.

Inventor
Hans Berg
By Livingston and Van Antwerp
Attorneys

Patented Nov. 20, 1934 1,981,494

UNITED STATES PATENT OFFICE

1,981,494

CABINET CORNER CONSTRUCTION

Hans Berg, Grand Rapids, Mich.

Application July 2, 1934, Serial No. 733,463

4 Claims. (Cl. 20—74)

This invention relates to cabinet corner construction and particularly to the so-called rounded corner of a cabinet constructed principally of ply-wood.

A principal object of the invention is to provide a construction in which no outside joint appears at the corner of the cabinet and in which the outer lamination of the structure is continuous around the corner. Another object of the invention is to provide a corner construction of this nature which is economical to manufacture and rigid when completed. Another object of the invention is to provide a structure which may be readily shipped flat before assembly and expeditiously assembled without the use of tools.

The invention provides various other new and useful features of construction and arrangement as hereinafter more fully described and particularly pointed out in the claims, reference being had to the accompanying drawings, in which,

Fig. 1 is a fragmentary perspective of a section of a corner construction embodying this invention.

Figs. 2 and 3 are fragmentary perspective views respectively of the corner post and laminated panel prior to assembly.

Fig. 4 shows the members of Figs. 2 and 3 partially assembled.

Fig. 5 is a section of the parts illustrated in Figs. 2 and 3 in assembled condition.

Fig. 6 is a sectional view of the panel member showing a modified construction.

Fig. 7 is a sectional view of the complete corner construction embodying the modified structure of Fig. 6.

Fig. 8 is a sectional view of the panel member showing a second modification, and

Fig. 9 is a sectional view of the complete corner construction embodying the modification of Fig. 8.

Like numbers refer to like parts in all of the figures.

Inasmuch as this invention pertains to the corner construction only of a cabinet nothing more than the corner construction is illustrated and it is to be understood that this corner structure may be utilized in various types of cabinets.

The cabinet comprises sides 1 and 2 extending angularly to each other, the accompanying drawings showing the sides arranged at right angles to each other. The sides of the cabinet are made of ply-wood having at least two laminations, the outer one 3 being relatively thin and the inner portion 4 of the panel being somewhat thicker. This inner portion of the panel may be a single piece as shown or may be built up of a plurality of laminations as desired.

A corner post 5 is provided having an arcuate outer surface and this post is provided at opposite edges with grooves 6. The two sides of the cabinet 1 and 2 adjacent the corner are composed of a single piece of ply-wood which is provided on its inner surface with a groove 7 which is preferably cut deep enough to remove all of the panel structure excepting the outer lamination 3 although in some cases wherein the panel structure is composed of extremely thin laminations the joining portion at the bottom of the groove may consist of more than one lamination of ply-wood it being essential that this joining portion be sufficiently thin to be readily flexed.

The sides 8 of the groove 7 are spaced apart a distance equal to the length of the arcuate surface 9 of the corner post extending between the respective grooves 6 which constitute its confines and in the completed structure the sides 8 of the panel lie within the grooves 6 of the corner post and the joining portion 10 of the panel is flexed around and lies adjacent the arcuate surface 9 of the post.

With reference to the structure shown in Figs. 1 to 5 it will be seen that the side edges 8 of the grooves 7 are undercut in the manner of a dove-tailed groove and the surfaces of the groove 6 in the post 5 against which the edges 8 engage are correspondingly inclined. The inner surface 11 of the post extends in the manner of a cord of a circle relative to the outer arcuate surface 9 and the sides of the grooves 6 adjacent the surface 11 overlap the inner surface of the respective panel sides in the completed structure.

In constructing this structure it is preferable to provide a laminated panel of sufficient size to form two or more of the sides of a cabinet and to provide the groove 7 therein by cutting away the inner portion of the panel leaving the outer lamination 3 integral to constitute the joining portion 10.

The corner post 5 has the grooves 6 cut therein of proper shape so that one edge of each groove will fit closely against an edge 8 of the panel structure and the other edge of the groove will fit closely against the inner surface of the panel structure when the corner is assembled. In assembling the structure it is preferable to moisten the outer joining portion 10 so that it can be readily bent and then the contacting surfaces of the structure are provided with an adhesive such as glue. The corner post is laid with its arcuate surface 9 in the groove of the panel

and against the joined portion 10 and the two sides of the cabinet are then turned into their proper relative planes which will automatically position the parts and draw them tightly together and after being held in this position for a sufficient time for the glue to set the joint is complete and rigid.

In the structure illustrated in Fig. 5 the undercut edges 8 of the panel groove interlock with the corresponding surface of the groove 6 in the corner post and strengthen it by preventing outward movement of the panel relative to the post and in all of the structures herein disclosed that portion of the corner post which overlaps the inner side of the panel prevents inward movement of the panel relative to the post and gives this added strength and rigidity of the structure which without it would have to depend entirely upon adhesiveness of the glue and strength of the outer lamination for that function.

The modified structure of Figs. 6 and 7 does not have the undercut sides of the panel groove and therefore omits the function thereof but this structure is otherwise identical with that illustrated in Fig. 5.

The second modification illustrated in Figs. 8 and 9 provides an undercut groove 12 in the rear surface of the panel at each side of the groove 7 therein and in this structure tongues 13 are provided on the corner post 5 and are received in the grooves 12 when the structure is assembled. These tongues 13 in the grooves 12 prevent lateral movement of the panel in either direction relative to the post and the tongues 13 readily enter the grooves 12 as the parts are bent into assembled relationship.

A structure made in accordance with this invention considerably simplifies cabinet construction and especially that type of construction having the continuous rounded corner. The grain of the wood comprising the outer veneer can be unbroken around the entire outer surface of the cabinet which is particularly advantageous from the standpoint of design. The construction is decidedly simple in that for each corner it requires only the provision of a groove of proper shape in the panel and a single piece corner post of simple construction. The fact that the corner post overlaps the rear surface of the respective panels gives great strength to the structure especially against outside pressure which tends to thrust the panel inwardly. The cabinet structure may be readily shipped knock-down in very compact space and when so shipped can be set up quickly and accurately by a relatively inexperienced workman.

The invention is defined in the appended claims and is to be considered comprehensive of all forms of structure coming within their scope.

I claim:

1. A construction of the class described comprising, two sides located adjacent a corner, a corner post interposed between adjacent edges of said sides and abutting thereagainst, an outer lamination joined to the outer surface of said sides and extending continuously around the outer surface of said corner post and an integral portion of said corner post overlapping the rear surfaces of said sides.

2. A construction of the class described comprising, two sides located adjacent a corner, the adjacent edges of said sides being undercut, a corner post interposed between said adjacent edges of the sides and having surfaces correspondingly inclined, an outer lamination attached to the outer surface of said sides and extending continuously around the outer surface of the corner post and an integral portion of said corner post overlapping the inner surfaces of said sides.

3. A construction of the class described comprising, two sides located adjacent a corner and having undercut grooves near their adjacent edges, a corner post interposed between the adjacent edges of the sides and abutting thereagainst and having integral tongues extending into said undercut grooves and an outer lamination attached to the outer surfaces of said sides and extending continuously around the outer surfaces of said corner post.

4. A construction of the class described comprising, two sides located adjacent a corner and having undercut grooves in their inner surfaces, a corner post interposed between the adjacent edges of the sides and abutting thereagainst and having integral tongues extending into said undercut grooves and an outer lamination attached to the outer surfaces of said sides and extending continuously around the outer surfaces of said corner post.

HANS BERG.