C. H. HOWARD.

PAPER REINFORCING MACHINE.

APPLICATION FILED MAR. 23, 1917.

1,318,150.

Patented Oct. 7, 1919.

4 SHEETS—SHEET 1.

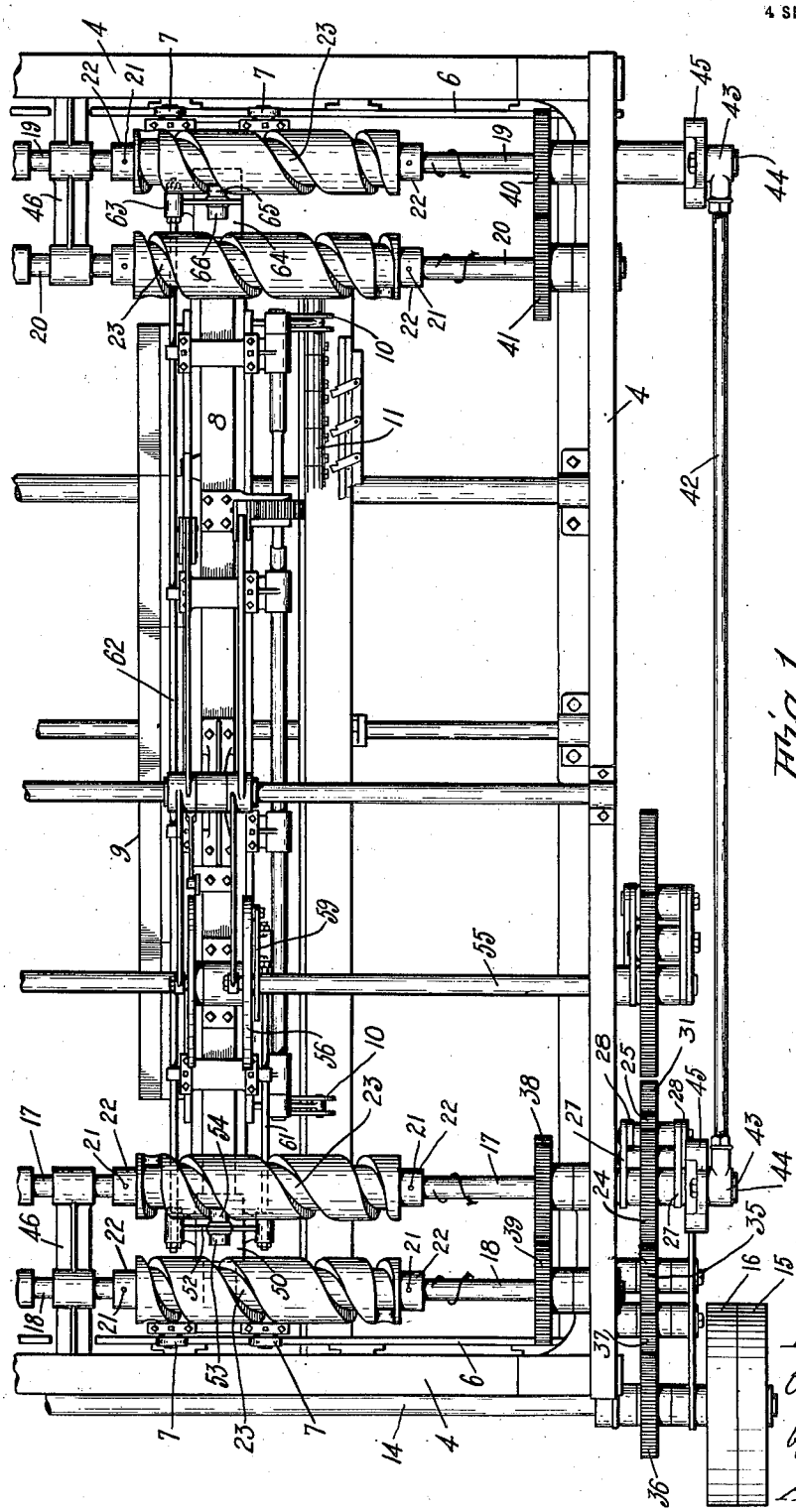

Fig. 1.

Inventor:
Charles H. Howard
by Robt. P. Hains
Attorney.

C. H. HOWARD.

PAPER REINFORCING MACHINE.

APPLICATION FILED MAR. 23, 1917.

1,318,150.

Patented Oct. 7, 1919.

4 SHEETS—SHEET 2.

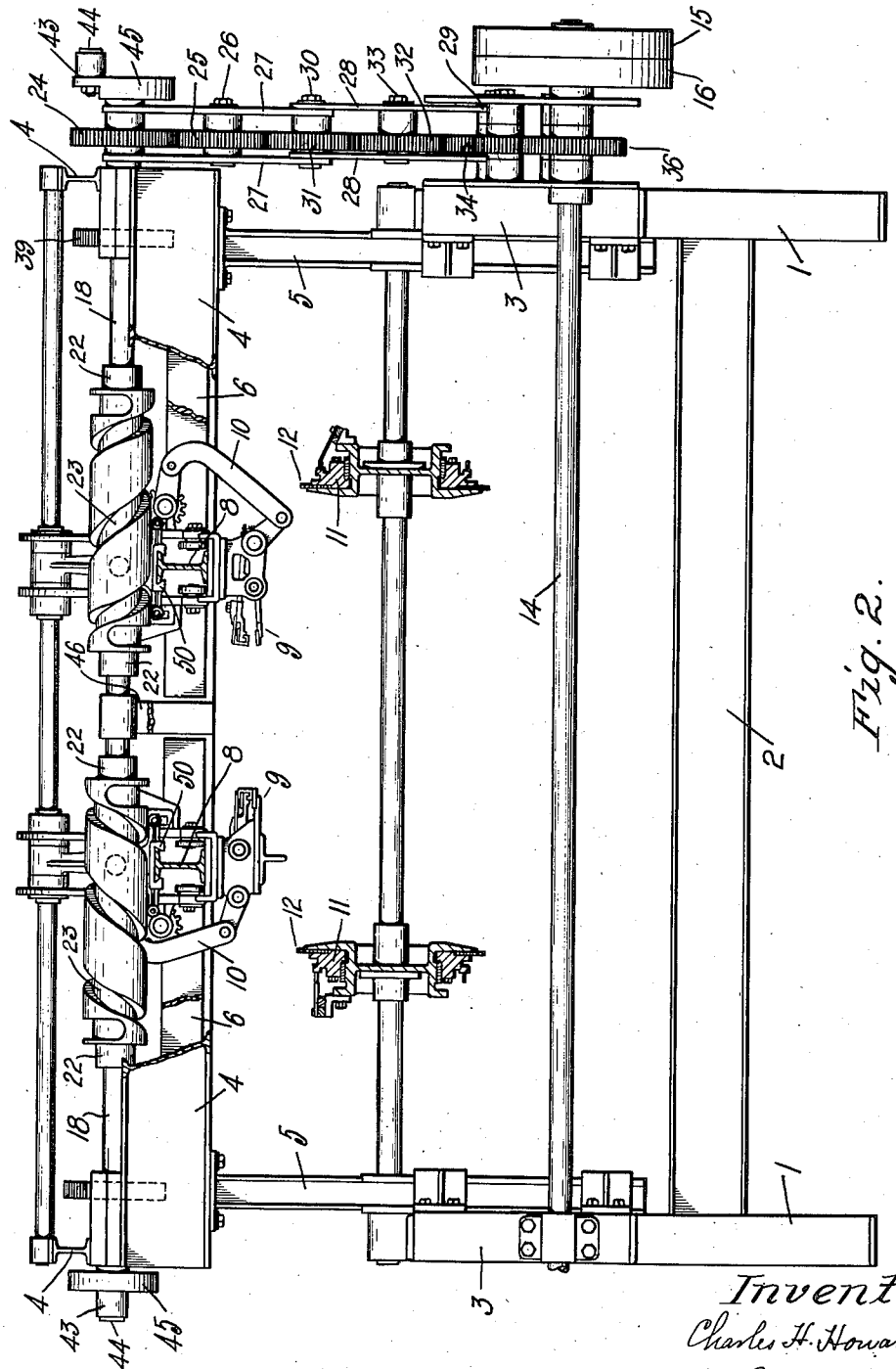

Fig. 2.

Inventor:
Charles H. Howard,
by Robt. P. Hains.
Attorney.

C. H. HOWARD.

PAPER REINFORCING MACHINE.

APPLICATION FILED MAR. 23, 1917.

1,318,150.

Patented Oct. 7, 1919.

4 SHEETS—SHEET 3.

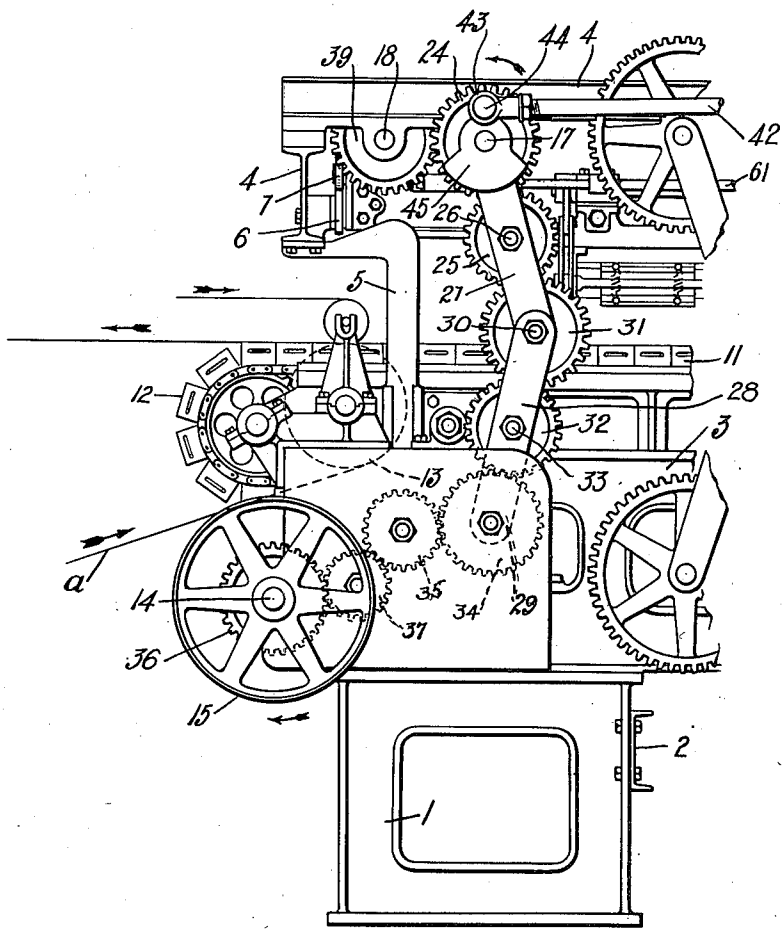

Fig. 3.

Inventor:
Charles H. Howard,
by Robt. G. Harris.
Attorney

C. H. HOWARD.

PAPER REINFORCING MACHINE.

APPLICATION FILED MAR. 23, 1917.

1,318,150.

Patented Oct. 7, 1919.

4 SHEETS—SHEET 4.

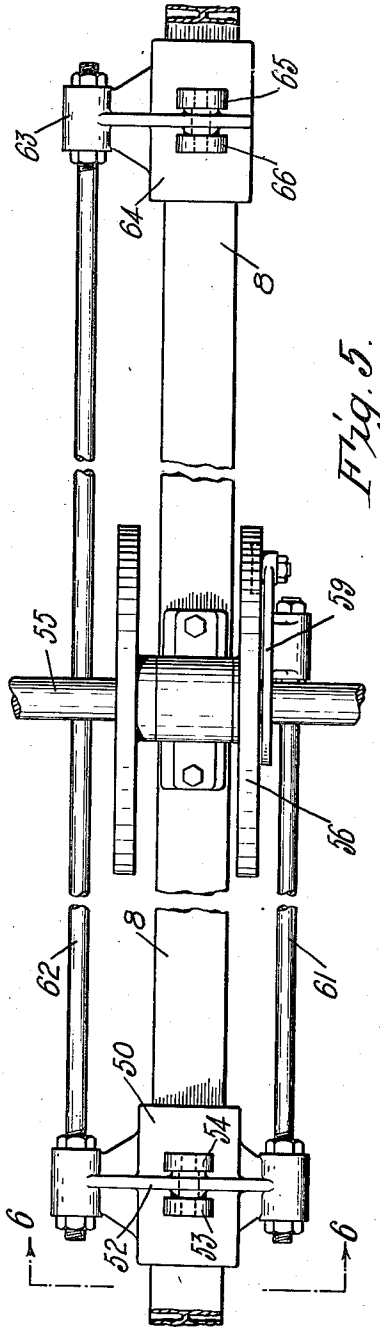

Fig. 5.

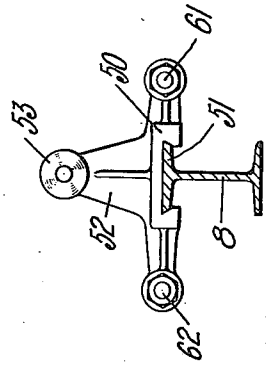

Fig. 6.

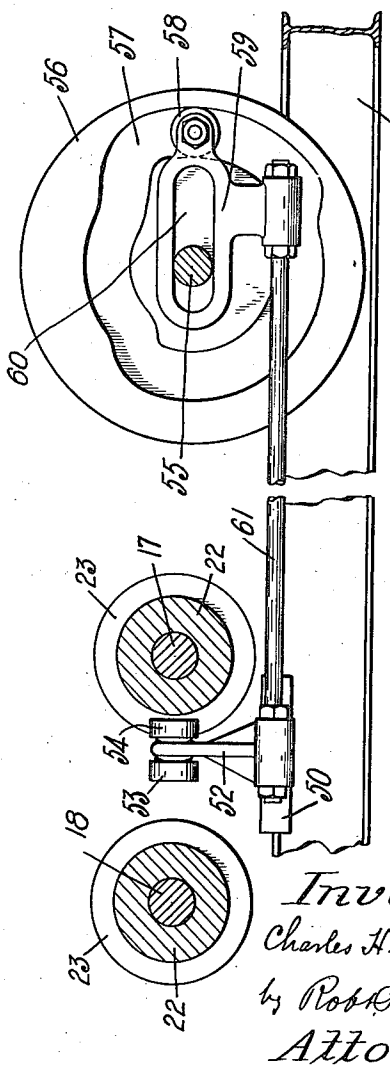

Fig. 4.

Inventor:
Charles H. Howard,
by Robt. D. Heims
Attorney:

UNITED STATES PATENT OFFICE.

CHARLES H. HOWARD, OF SAUGUS, MASSACHUSETTS, ASSIGNOR TO PAPER PRODUCTS MACHINE COMPANY, OF BOSTON, MASSACHUSETTS, A CORPORATION OF MASSACHUSETTS.

PAPER-REINFORCING MACHINE.

1,318,150. Specification of Letters Patent. Patented Oct. 7, 1919.

Application filed March 23, 1917. Serial No. 157,009.

To all whom it may concern:

Be it known that I, CHARLES H. HOWARD, a citizen of the United States, residing at Saugus, county of Essex, and State of Massachusetts, have invented an Improvement in Paper-Reinforcing Machines, of which the following description, in connection with the accompanying drawings, is a specification, like characters on the drawings representing like parts.

The invention to be hereinafter described relates to machines for reinforcing fabrics, and more particularly to such machines for reinforcing paper fabrics or paper stock by the application thereto of reinforcing filaments.

In this general type of machine, difficulty is sometimes experienced in properly manipulating the transversely-extending reinforcing filaments which may be threads, cords, wires or similar elements. These transversely-extending reinforcing filaments are drawn from a source of supply by drawing or distending means and placed in transverse position relative to the machine frame or the receiver to which the filaments are to be transferred. Such reinforcing filaments are of delicate nature in many instances, and in order that they may be accurately drawn from the source of supply and placed in transverse position for application to the receiver, the drawing or distending means must be given its transverse drawing and distending movements such that the filaments may not be broken. To secure this desirable condition, the drawing or distending means should be given a smooth and positive movement transversely of the machine in opposite directions and be brought to rest at the ends of its travel in a predetermined position. In a prior application, applicant showed, described, and claimed broadly screw or spiral means for imparting to the drawing or distending means its transverse movement, but in the machine illustrated in said prior application, the screw or spiral means consisted of a single screw or spiral operatively connected to the drawing or distending means and rotated first in one and then in the opposite direction. This form of screw or spiral actuating means for the drawing or distending means has been found in practice to be efficient and well adapted for its purpose, but it requires that the screw or spiral shall be alternately rotated in opposite directions in order to move the drawing or distending means first in one and then in the reverse direction. The present invention is an improvement on the invention of the said application, and has for one of its objects the provision of screw or spiral means which may be continuously rotated in one direction to impart to the drawing or distending means its travel in both directions. An important feature of the present invention, therefore, consists of two continuously rotated screws or spirals and means for alternately connecting the drawing or distending means with one or the other screw or spiral to effect the movement of the drawing or distending means first in one and then in the opposite direction.

In carrying this feature of the invention into practical effect, the dual screw or spiral may be variously formed and means be provided for automatically shifting the drawing or distending means from the control of one screw or spiral to the control of the other screw or spiral. In the illustrated form of the invention, however, the companion screws or spirals are formed on separate shafts and arranged side by side and are continuously rotated, but it will be evident of course, that the screws or spirals for giving the transverse travel to the drawing or distending means first in one and then in the other direction may be otherwise formed.

In a prior application, Serial Number 134,259, filed December 1, 1916, there was described an organized machine for reinforcing fabrics or paper stock wherein the drawing or distending means was moved transversely of the machine by a rack and pinion gearing to draw and distend reinforcing filaments into transverse relation with the receiver, and then such transversely-disposed reinforcing filaments were transferred to the receiver which might be either the fabric or material to be reinforced, or a carrier for transferring the reinforcing filaments to a more distant point for transfer to such fabric or material. The present invention is applicable to such machine, as shown and described in said last-named application; and while it is well adapted for use in connection with such organized means for applying reinforcing filaments to the material to be reinforced, it is to be understood that it is not restricted thereto, but

may be employed in connection with any character of machine for applying transverse reinforcing filaments to material to be reinforced. In the present exploitation of the invention, however. it will be described as employed in the machine of said prior application, Serial Number 134,259, but only such portions of said machine will herein be described as appear necessary to make clear the association of the present invention therewith, and for full and detailed description of the various elements which combine to make up such machine construction, reference may be had to said prior application.

In the drawings:—

Figure 1 is a plan view showing one-half of the reinforcing machine provided with the present invention, and showing more particularly the screw or spiral actuating means for the drawing-in or distending means;

Fig. 2 is an end elevation looking from the left, Fig. 1, many of the parts being omitted for clearness of illustration;

Fig. 3 is a side elevation showing one means of presenting the material or fabric to be reinforced;

Fig. 4 is an enlarged detail view of the means for automatically shifting the connection between the drawing-in or distending means and the screws or spirals, some of the parts being shown in section, and others being broken away;

Fig. 5 is a plan view on an enlarged scale, parts being broken away, showing the means for shifting the control of the drawing or distending means between the screws or spirals at opposite end portions of the machine; and

Fig. 6 is a sectional view on the line 6—6, Fig. 5.

The machine frame for sustaining the operating parts, may be of any suitable character and as shown by Fig. 2, comprises the base portion 1 connected by suitable braces 2 and box frames 3. Mounted for rising and falling movement with relation to the stationary framing is the gripper frame 4 from which depend the corner posts 5 guided at their lower portions by suitable guiding means connected to the stationary frame. The gripper frame 4 may be raised and lowered by any suitable means, such, for instance, as that fully shown and described in said prior application, Serial Number 134,259, to which reference may be had. The gripper frame 4 is provided with the transverse guide rails 6 upon which the rollers 7, Fig. 1, carried by the gripper carrier 8 rest, and by which the gripper carrier 8 is supported during its transverse movement, substantially as more fully described in said prior application. The gripper carrier 8 has supported thereon a series of grippers 9, Fig. 2, which may be operated by means of links 10 and their associated parts as more fully described in said prior application, but as the details of the grippers form no essential part of the present invention, they need not be herein further described. So far as the present invention is concerned, the grippers which constitute the drawing or distending means, may be of any appropriate character suitable for gripping the reinforcing filaments and then drawing them into transversely-distended relation with the receiver to which the reinforcing filaments are to be applied.

In the illustrated form of the invention, the receiver is formed by the chains 11 which extend longitudinally of the machine as indicated in Figs. 1 and 2, and are provided with the holding fingers 12 adapted to receive the transversely-distended reinforcing filaments and transport them to a distant point for the application to the fabric or material to be reinforced. In the machine in which the present invention is incorporated, the material or paper *a* to be reinforced is taken from a suitable source of supply, as indicated in Fig. 3, and is passed around a guide roller 13, the transversely-distended reinforcing filaments being applied to the material or paper by the carriers 11 as the links thereof progressively transport the reinforcing filaments toward said guide roller 13, substantially as more fully explained in said prior application. The described form of means for applying the reinforcing filaments to the material is found to be a good practical embodiment of this feature, but it is to be understood that the present invention is not restricted in these respects, and that instead of applying the reinforcing filaments to the material or paper by means of the carriers 11, the reinforcing filaments may be directly applied to the material or paper by the drawing or distending means.

Mounted upon the stationary supporting frame of the machine is the main driving shaft 14 having the fast and loose pulleys 15 and 16 whereby said driving shaft may be appropriately driven as desired, from any suitable source of power.

Mounted in the gripper frame 4 at one end thereof, are the companion screw or spiral shafts 17 and 18, and similarly mounted near the opposite end of the gripper frames 4 are the companion shafts 19 and 20. The several shafts 17, 18, 19 and 20 are each provided with a screw or spiral which may be formed thereon in any desired manner, but in the present instance of the invention, each of said shafts has secured thereto by suitable means such as the pins 21, a sleeve 22 which is formed with a screw or spiral 23. The present invention contemplates that the drawing or distend-

ing means shall move transversely of the machine in one direction and then be returned in the opposite direction in order to draw and distend reinforcing filaments into transverse relation to the receiver with which they are to be transferred. Such positioning of the reinforcing filaments may be effected by any suitable form of drawing means, and while in the illustrated form of the present invention there is a drawing or distending means at each side of the machine which are movable toward and from each other in effecting the desired positioning of the transverse reinforcing filaments, it will be understood, of course, that it is not always necessary to use both such drawing or distending means, and one may be sufficient by giving it proper transverse travel. In the present instance of the invention, however, where two drawing or distending means are employed, the screw or spiral shafts 17, 18, 19 and 20 are provided with screws or spirals, one for actuation of each of the drawing or distending means, that is, one screw or spiral at one side of the median line of the machine may be employed to actuate the drawing or distending means at that side of the machine and another screw or spiral may be employed to actuate the drawing or distending means at the other side of the median line of the machine, the construction being such that upon rotation of said shafts, the drawing and distending means, when two are used, will be moved toward and from each other to draw or distend the reinforcing filaments into transverse relation with the receiver to which they are to be applied. Where two drawing or distending means are employed, as illustrated by Fig. 2, the screws or spirals on the shafts 17, 18, 19 and 20, at opposite sides of the median line of the machine are reversely arranged, that is, one is a right and the other is a left screw or spiral, the construction being such that when the shafts are rotated, the drawing or distending means will be moved toward and from each other as already described.

Mounted upon the end portion of one of the screw or spiral shafts as for instance 17, is a gear or pinion 24, which is in operative engagement with an idler 25 mounted at 26 between the links 27 which are mounted to rock upon the shaft 17 at their upper ends and at their lower ends are connected to similar links 28. The links 28 are pivoted at their lower ends as at 29, to a stud projecting from the machine frame. Mounted on a stud 30 which pivotally connects the links 27 and 28, is an idle gear 31 which meshes with another idle gear 32 carried by the stud 33 mounted in the links 28 and said gear 32 is in operative engagement with a gear 34 mounted on the axis 29, the construction being such that as the gripper frame 4 rises and falls, as fully described in said prior application, Ser. No. 134,259, the links 27 and 28 will act as toggles for supporting and maintaining the driving connections between the screw or spiral shaft 17 and the actuating gear 34.

Secured to rotate with the main driving shaft 14 is a gear or pinion 36, Figs. 1 and 2, which engages with idle gears 35 and 37 interposed between the gear or pinion 36 and the gear 34, the construction being such that the rotary movement of the driving shaft 14 will be transmitted through the gear 36 and the train of gearing described, to continuously rotate the screw or spiral shaft 17 in one direction.

Where the spirals for moving the drawing or distending means are mounted on separate shafts as illustrated in the present embodiment of the invention, said screws or spirals, instead of being made reverse, as they would be if they were both on the same shaft, are made similar, that is, the screw or spiral on the shafts 17 and 18 have the same twist and means are interposed between the shafts 17 and 18 to rotate said shafts in opposite directions. In the present instance of the invention, the shaft 17 has secured thereto a gear 38 which meshes with a corresponding gear 39 mounted on the shaft 18, the construction being such that as the screw or spiral shaft 17 is continuously rotated in one direction, the spiral shaft 18 will be continuously rotated in the opposite direction.

The spiral shafts 19 and 20 at the opposite end portion of the gripper frame 4 are similar in all respects to the spiral shafts 17, 18 already described, and said shafts 19 and 20 are appropriately connected to rotate in the opposite directions by means of gears 40 and 41. In order that the companion gears 17 and 18 and companion gears 19 and 20 may be rotated in unison, to effect proper transverse movement of the drawing or distending means at both ends of the gripper frame, the shafts 17 and 19 are connected by the connecting rod 42 pivoted at 43 and 44 to a counterweighted crank 45 mounted on each of said shafts, the construction being such that upon rotation of the driving shaft, the shafts 17 and 18 will rotate continuously in opposite directions and likewise the shafts 19 and 20 will be similarly rotated continuously in opposite directions.

Where two drawing or distending means are employed, one at each side of the machine, as shown by the present form of the invention, the shafts 17, 18, 19 and 20 may be supported intermediate their lengths by an arm 46 secured to the gripper frame 4 and having suitable bearings for said shafts, substantially as indicated in Figs. 1 and 2.

From the construction described, it will be noted that if a drawing and distending

means be operatively connected to one of the screws or spirals, it will be moved in one direction by the continuously-rotating screw or spiral with which it is connected, and if connected to the companion screw or spiral, it will be moved in the opposite direction. To effect this movement of the drawing or distending means, first in one and then in the opposite transverse direction, means are provided by the present invention for automatically shifting the operative connection between the drawing or distending means and the screws or spirals at appropriate times, and one form of such means will now be described.

Mounted for sliding movement upon the gripper carrier 8 is a shoe or slide 50. The gripper carrier 8 may appropriately be formed as an angle iron as illustrated in Figs. 4 and 6, and the shoe or slide 50 may be appropriately formed as indicated in Fig. 6, to embrace the upper portion 51 of the angle iron to be guided thereby. Extending upwardly from the shoe or slide 50 is the arm 52, Figs. 4 and 6, carrying the studs or rolls 53, 54, adapted to operatively engage with the screw or spiral 23 carried by the respective screw or spiral shafts. Where the screw or spiral is formed by a groove as 23, the engaging member carried by the drawing or distending means is formed by the pins or rollers 53, 54, but of course if the screw or spiral were formed otherwise, the parts 53 and 54 would be correspondingly shaped to properly engage therewith.

Mounted upon the gripper frame 4 is the cam shaft 55, which, as fully described in the prior application to which reference has been made, is constantly driven. Secured to the cam shaft 55 is the cam disk 56 having a cam path 57 with which is engaged a roll or pin 58 carried by a yoke 59 having a slot 60 by which the yoke 59 may be guided on the cam shaft 55 as said yoke is moved longitudinally or to the right and left, Fig. 4. The yoke 59 is connected to the slide or shoe 50 by suitable means such, for instance, as the connecting rod 61, Figs. 4 and 5, the construction being such that upon rotation of the cam shaft 55 and, perforce, the cam disk 56, the slide or shoe 50 will be moved at appropriate times to operatively engage either the screw shaft 17 or the screw shaft 18 with the gripper carrier 8, and perforce, cause movement of the gripper carrier in appropriate transverse direction.

In the present instance of the invention, a series of grippers are employed, substantially as fully described in said prior application, to draw from a source of supply and distend transversely of the machine a plural number of reinforcing filaments; and in the present instance of the invention, the number of grippers thus employed requires that the gripper carrier 8 be made of considerable length so that it has been found preferable to actuate the gripper carrier 8 by the screw or gripper means at each end of the gripper carrier, as by the screws or spirals mounted on the respective shafts 17, 18, and 19, 20. Therefore, when the shoe 50 shifts the connection of the gripper carrier 8 from one to the other of the gripper screw or spiral shafts 17, 18, it is necessary that the connection of the gripper carrier with the screw or spirals 19, 20 at the other end of the frame be shifted. To this end, the shoe or slide 50 has secured thereto a connecting rod 62, Fig. 5, said connecting rod being secured at its opposite end as at 63 to a slide or shoe 64 which may be similar in all respects to the slide or shoe 50 and carry the pins or rollers 65, 66, or other appropriate means for operatively engaging the screws or spirals on the shafts 19 or 20 with the gripper carrier 8.

The means described for thus automatically shifting the operative connection of the drawing or distending means with the different screws or spirals has been found practically efficient, and to effect a smooth and equal movement so necessary in a machine of this character; but it will be understood, of course, that applicant does not restrict himself in this respect, as he believes he is the first in this art to provide a continuously-rotating screw or spiral and means for periodically shifting the connection between the drawing or distending means and such continuously rotating screw or spiral to effect movement of the drawing or distending means first in one direction of the machine and then in the reverse direction.

To effect the proper movement of the drawing or distending means transversely of the machine and bring it to rest in proper position for grasping or releasing the reinforcing filaments, it is desirable that the screw or spiral actuating means shall have a circular or neutral portion at each end thereof. When the drawing or distending means has reached the limit of its travel in one direction, the operative connection of the gripper carrier will be changed from one screw or spiral to the other, and immediately thereafter the travel of the gripper carrier will be reversed. Economic production of reinforced fabric requires that the drawing or distending means shall move as rapidly as possible between its end positions, but the danger of breaking the reinforcing filaments requires that said means be started and stopped gradually. Therefore, the screw or spiral 23 is formed with a pitch which gradually increases from each end of the spiral toward the central portion thereof as will be clearly evident from Figs. 1 and 2.

In order to transfer the transversely-distended filaments to the receiver beneath, whether that receiver be paper fabric itself or a carrier such as illustrated, as in the present form of the invention, the drawing or distending means, such as the grippers, will be given a movement in a direction of movement of the receiver when the threads are to be transferred thereto; but these features of the invention have been clearly described in the prior application, and need no further elucidation here.

What is claimed is:—

1. In a machine of the character described, the combination of the supporting frame, drawing means for simultaneously drawing a plurality of reinforcing filaments from a source of supply and distending them transversely of the machine frame, screw or spiral means for moving the drawing or distending means transversely of the machine, and means for continuously rotating said screw or spiral means.

2. In a machine of the character described, the combination of a supporting frame, grippers for drawing reinforcing filaments from a source of supply and placing them transversely of the machine, screw or spiral means for moving the grippers transversely, means for operatively connecting and disconnecting the screw or spiral means and grippers, and means for continuously actuating said screw or spiral means.

3. In a machine for reinforcing fabrics by transversely disposed filaments, the combination of gripper means for taking hold of the filaments at one side of the machine and moving them transversely of the machine, and continuously rotating screw means adapted to be operatively connected to the gripper means for imparting thereto its transverse movement.

4. In a machine of the character described, the combination of means for taking and drawing reinforcing filaments from a source of supply and placing them transversely of the machine, and means for traversing the drawing means transversely of the machine in opposite directions including two screws or spirals arranged in parallel relation transversely of the machine, means for continuously rotating said screws or spirals, and means for operatively connecting the drawing means alternately with said screws or spirals.

5. In a machine of the character described, the combination of grippers, and means for traversing the grippers transversely of the machine in opposite directions including two screws or spirals arranged transversely of the machine, means for continuously rotating said screws or spirals, and means for operatively connecting the grippers first with one and then with the other of the screws or spirals.

6. In a machine of the character described, the combination of means for drawing reinforcing filaments from a source of supply, and means for traversing the drawing means transversely of the machine in opposite directions including screws or spirals, and means acting automatically operatively to connect the drawing means with one of said screws or spirals and then with the other screw or spiral.

7. In a machine for placing upon a receiver transversely extending reinforcing filaments, the combination of means for feeding the receiver, transversely movable means to act upon the reinforcing filaments and place them in transverse relation to the receiver, and means for traversing said transversely movable means including two spirals, means for continuously rotating the two spirals, and automatic means for operatively associating either spiral with the transversely movable means.

8. In a machine of the character described, the combination of means adapted simultaneously to draw from a source of supply a plurality of reinforcing filaments, and means for traversing said drawing means including two screws or spirals arranged in parallel relation transversely of the machine, mechanism for continuously rotating said screws or spirals, and devices for operatively connecting either screw or spiral with said drawing means.

9. In a machine for placing reinforcing filaments transversely of a receiver, the combination of drawing means adapted to place reinforcing filaments in transverse relation to the receiver, two screws or spirals arranged in parallel relation transversely of the machine, means for continuously rotating said screws or spirals in opposite directions, and means for automatically shifting the drawing means into operative relation first with one and then the other of said screws or spirals.

10. In a machine for placing reinforcing filaments transversely of a receiver, the combination of grippers adapted to clamp a plurality of reinforcing filaments and place them in transverse relation to the receiver, and means for traversing said grippers transversely of the machine including dual screw or spiral means, means for continuously rotating the screw or spiral means, and means for shifting the grippers into alternate operative control of the dual screw or spiral means.

11. In a machine of the character described, the combination of a supporting frame, grippers adapted to take hold of reinforcing filaments at one side of the machine and draw them from a source of supply and means for traversing said grippers including a pair of screws or spirals extending transversely of the machine

frame, means for continuously rotating said screws or spirals, means movable from one screw or spiral to the other to operatively connect either of them with the grippers, and means acting automatically to shift the movable means.

12. In a machine of the character described, the combination of the frame, grippers adapted to draw reinforcing filaments from a source of supply and place them in substantially parallel relation transversely of the machine frame, two shafts supported transversely of said frame and each having a screw or spiral, means for rotating said shafts in opposite directions, and means for operatively connecting the grippers alternately with said screws or spirals to move the grippers transversely of the frame in opposite directions.

13. In a machine of the character described, the combination of the supporting frame, drawing or distending means for drawing reinforcing filaments from a source of supply and placing them transversely of the frame, and means for traversing said drawing or distending means transversely of the frame including two screws or spirals, means for rotating said screws or spirals continuously in one direction, said screws or spirals each having portions of different pitch, and means for connecting either screw or spiral with the drawing or distending means.

14. In a machine of the character described, the combination of the supporting frame, drawing or distending means for drawing reinforcing filaments from a source of supply and placing them transversely of the machine, two screws or spirals, one for moving the drawing or distending means transversely in one direction and the other for moving it in the opposite direction, means for rotating said screws or spirals, and automatic means for operatively connecting the drawing or distending means alternately with said screws or spirals.

15. In a machine of the character described, the combination of the supporting frame, drawing or distending means for drawing reinforcing filaments from a source of supply and placing them transversely of the machine, two screws or spirals, one for moving the drawing or distending means transversely in one direction and the other for moving it in the opposite direction, means for rotating said screws or spirals, and cam actuated means for operatively connecting the drawing or distending means first with one and then with the other screw or spiral.

16. In a machine of the character described the combination of the supporting frame, a plurality of grippers movable transversely of the frame, two screws or spirals, one for moving the set of grippers transversely of the machine in one direction and the other for moving them in the reverse direction, means for continuously rotating said screws or spirals, and automatic means acting when the grippers are at the limit of their transverse movement to shift the operative connection of the grippers from one to the other of said screws or spirals.

17. In a machine for reinforcing fabrics by transversely disposed filaments, the combination of a frame carrying a series of grippers, and means for traversing the grippers first in one and then in the other direction including a pair of screws extending transversely of the machine frame, means for operating the screws and means for connecting the gripper carrying frame alternately with said screws.

18. In a machine for reinforcing fabrics by transversely disposed filaments, the combination of two grippers movable toward and from each other transversely of the machine, screws for moving the grippers away from each other, screws for moving the grippers toward each other, and means for alternately connecting the grippers with their operating screws.

19. In a machine of the character described, the combination of a supporting frame, grippers for engaging reinforcing filaments at one side of the machine and distending them transversely of said frame for application to a fabric to be reinforced, two screws extending transversely of the machine frame, operating connections between said screws for rotating them oppositely in timed relation, and means for connecting the grippers first with one screw and then with the other.

In testimony whereof, I have signed my name to this specification.

CHARLES H. HOWARD.