C. A. COOLEY.

STOPS FOR ENGINE-LATHES.

No. 193,850. Patented Aug. 7, 1877.

Fig. 1

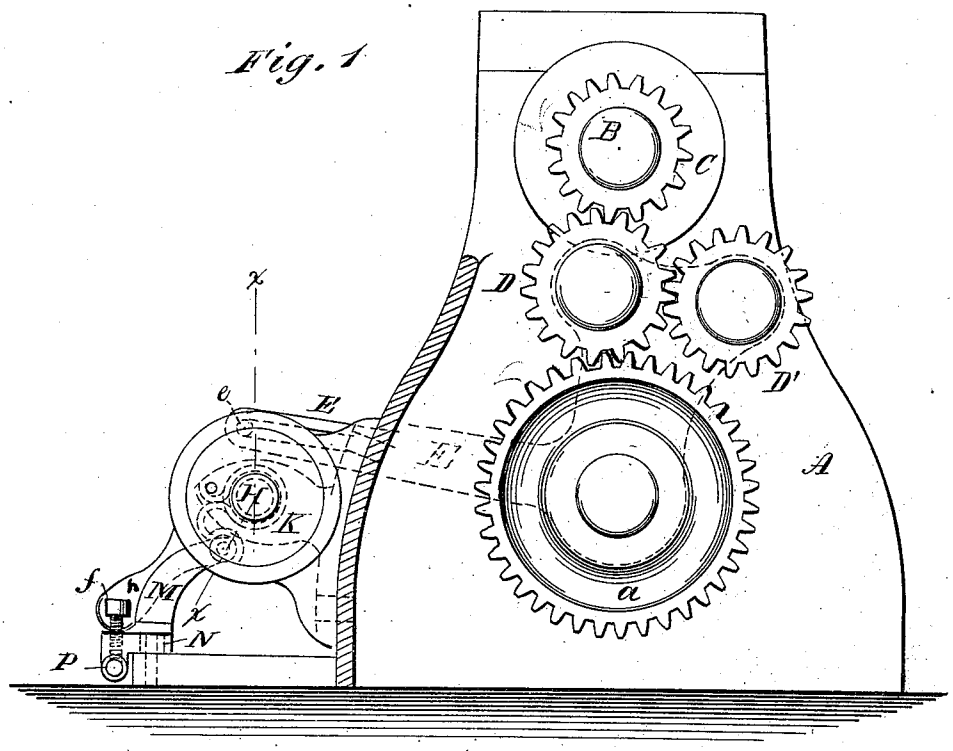

Fig. 2

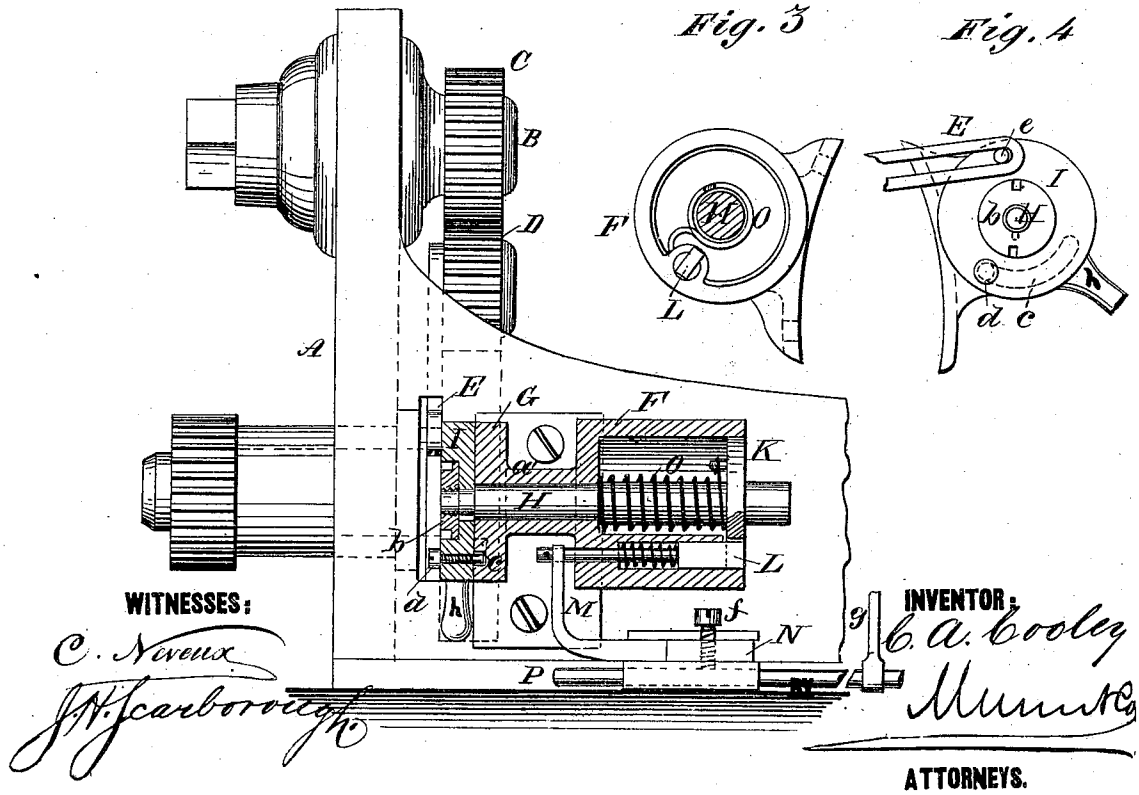

Fig. 3

Fig. 4

WITNESSES:

C. Neveux

J. W. Scarborough

INVENTOR:

C. A. Cooley

Munn & Co

ATTORNEYS.

N. PETERS, PHOTO-LITHOGRAPHER, WASHINGTON, D. C.

UNITED STATES PATENT OFFICE.

CHARLES A. COOLEY, OF EAST HARTFORD, CONNECTICUT.

IMPROVEMENT IN STOPS FOR ENGINE-LATHES.

Specification forming part of Letters Patent No. **193,850**, dated August 7, 1877; application filed June 25, 1877.

To all whom it may concern:

Be it known that I, CHARLES A. COOLEY, of East Hartford, in the county of Hartford and State of Connecticut, have invented a new and Improved Stop for Engine-Lathes, of which the following is a specification:

Figure 1 is an end elevation of a portion of a lathe-head having my improvement attached. Fig. 2 is a side elevation of the same, in section, on line *x x* in Fig. 1. Figs. 3 and 4 are detail views of the stopping mechanism.

Similar letters of reference indicate corresponding parts.

The object of my invention is to furnish a device for throwing the feeding mechanism of an engine-lathe out of gear when the tool has arrived at a given point, so that a number of pieces of the same length and shape may be turned without measuring each separately.

Referring to the drawings, A is an ordinary lathe-head, in which is journaled the spindle B, upon which is placed the usual pinion C. D D′ are intermediate pinions, placed on studs projecting from the lever E, which lever is journaled on the same center as the wheel *a*, with which either of the pinions D D′ may be made to engage by moving the said lever. This reversing-gear is nearly the same on all lathes.

The handle that is usually placed on the end of the lever E is dispensed with, and the said lever is slotted longitudinally to receive a stud projecting from a disk of the stopping mechanism.

F is a barrel, attached to the lathe-head by means of screws. This barrel is connected with a disk, G, by a sleeve, *a′*, and a shaft, H, passes through the barrel and sleeve, and to it a disk, I, is attached, being held in place by the nut *b*, which is let into the face of the disk, and is provided with nicks for receiving a screw-driver. The said disk is prevented from turning on the shaft by a feather.

Upon the opposite end of the shaft H, and in the open end of the barrel F, a disk, K, is placed. This disk is notched to receive a spring-bolt, L, that slides in a guide formed at the side of the barrel. The bolt extends through the fixed head of the barrel, and in it a pin is placed, which is engaged by a curved arm, M, that extends upward from a head, N, that slides in ways on the bed of the lathe.

A spring, O, surrounds the shaft H, and is attached to the barrel F, and connected with a pin projecting from the inner face of the disk K.

The disk G is provided with a curved slot, *c*, which receives the end of the screw *d* in the disk I, and limits the motion of the said disk. A stud, *e*, projects from the outer face of the disk I into the slot in the lever E.

A rod, P, passes through the head N, where it is clamped by a screw, *f*. The said rod extends along the front of the lathe-bed, and upon it an arm, *g*, is placed, which is engaged by the tool-carriage of the lathe.

The operation is as follows: A piece of work is placed in the lathe, and the rod P is adjusted so that the tool-carriage will strike the arm *g* at the instant the work is done. The movement of the head N withdraws the bolt L from the notch in the disk K. The spring O now turns the shaft H, and, consequently, the disk I, which carries the stud *e*, by which the lever E is moved so as to throw the pinion D out of gear and stop the feed of the lathe.

When a new piece is put in the lathe the feeding mechanism is set in operation by turning the disk I, by means of the handle *h*, which is attached to it, when the bolt L again engages the disk K, and the operation is repeated.

I do not limit or confine myself to the exact form or position of the parts composing my improvement, as they may be varied without departing from my invention.

Having thus described my invention, I claim as new and desire to secure by Letters Patent—

1. The combination, with the lever E, of the disk I, having the pin *e*, a spring, a de-

tent, and a tripping device, substantially as and for the purpose herein shown and described.

2. The barrel F, having formed on it the sleeve *a'* and disk G, the shaft H, spring O, disks K I, spring-bolt L, and the tripping device, consisting of the rod P, having the arm *g*, and the adjustable head N, in combination, substantially as herein shown and described.

CHARLES A. COOLEY.

Witnesses:

MILLARD E. LEWIS,

JOHN ALGER.