(No Model.) 3 Sheets—Sheet 1.

J. A. SCHARF.

MACHINE FOR MAKING HAY TIES.

No. 590,338. Patented Sept. 21, 1897.

Fig. 7

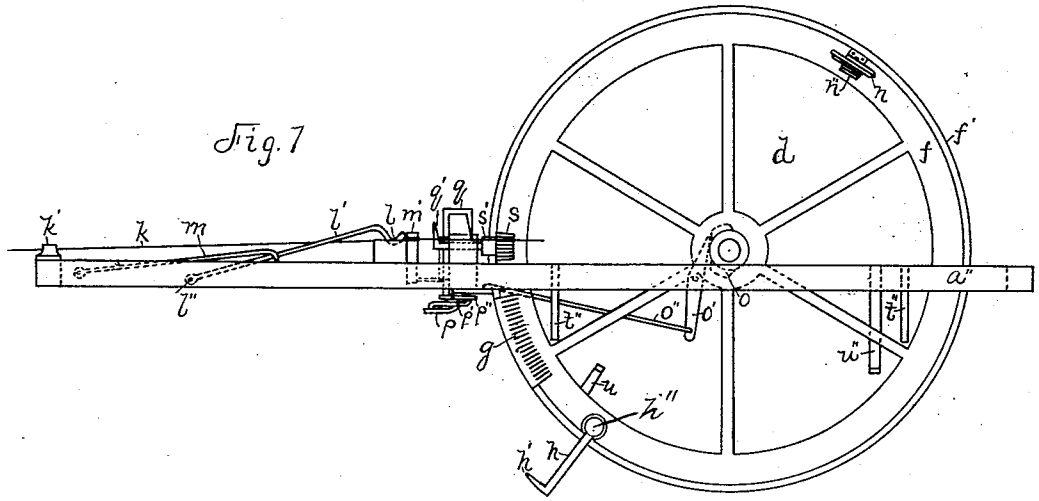

Fig. 2.

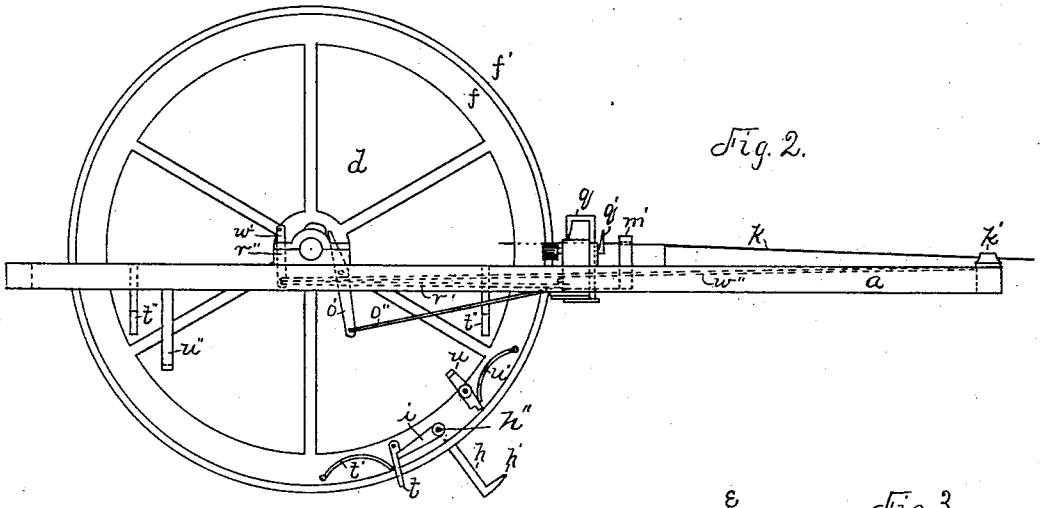

Fig. 3.

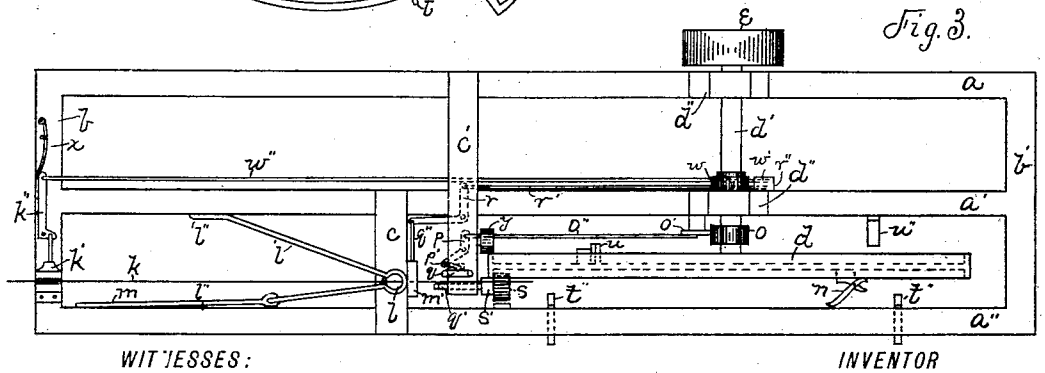

WITNESSES:

F. B. Wrobleski.

Paul Strong.

INVENTOR

John A. Scharf

BY

C. D. Hudgens.

ATTORNEY.

THE NORRIS PETERS CO., PHOTO-LITHO., WASHINGTON, D. C.

(No Model.) 3 Sheets—Sheet 2.

J. A. SCHARF.

MACHINE FOR MAKING HAY TIES.

No. 590,338. Patented Sept. 21, 1897.

Fig. 4.

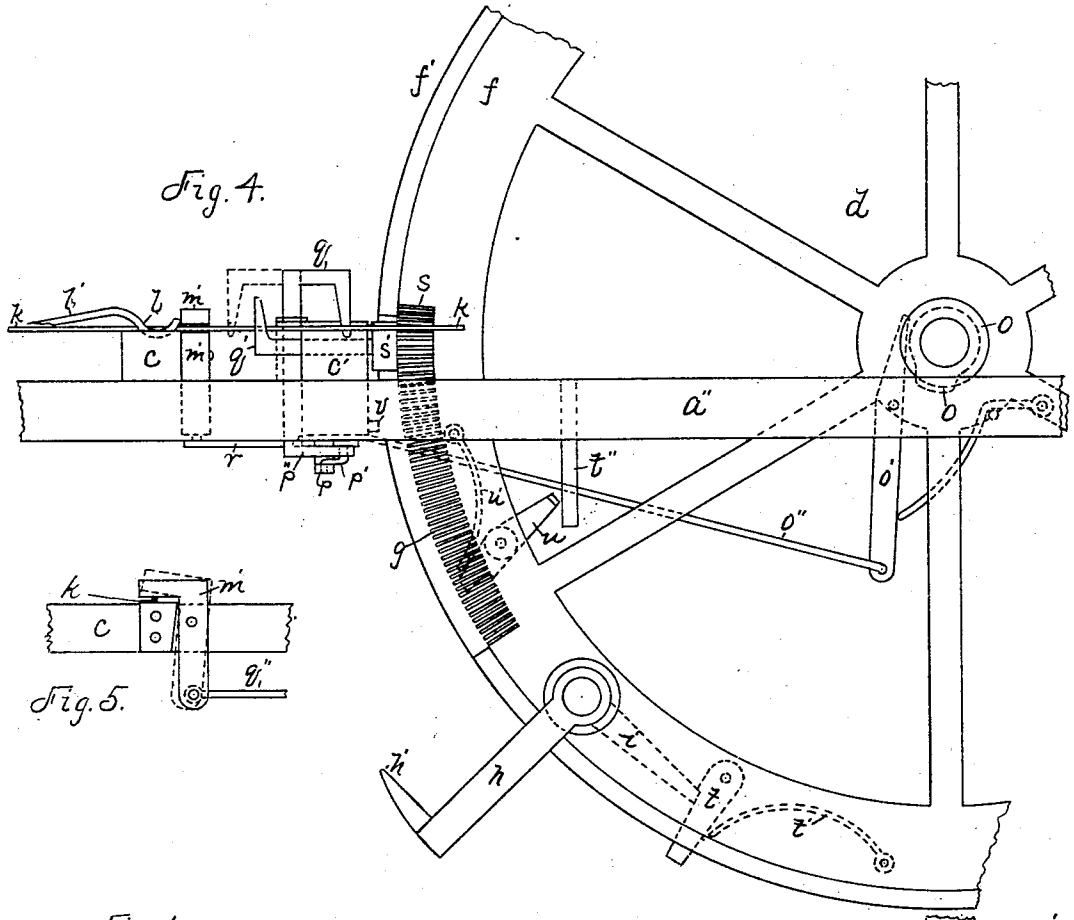

Fig. 5.

Fig. 6.

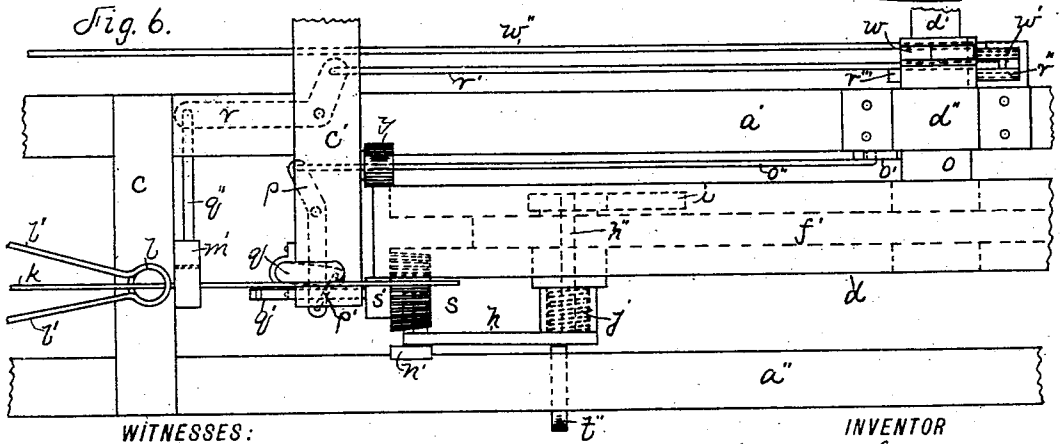

WITNESSES:

F. B. Drewsher

Paul Strong.

INVENTOR

John A. Scharf

BY

C. D. Hudgens

ATTORNEY.

THE NORRIS PETERS CO., PHOTO-LITHO., WASHINGTON, D. C.

(No Model.) 3 Sheets—Sheet 3.

J. A. SCHARF.

MACHINE FOR MAKING HAY TIES.

No. 590,338. Patented Sept. 21, 1897.

Fig. 7.

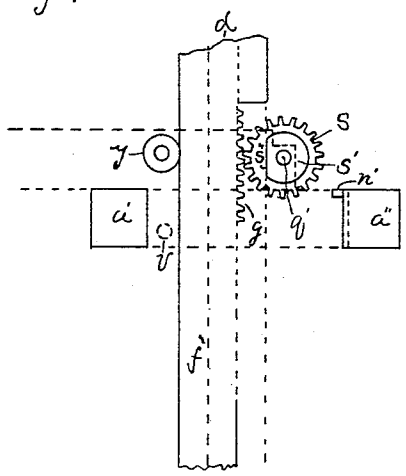

Fig. 8.

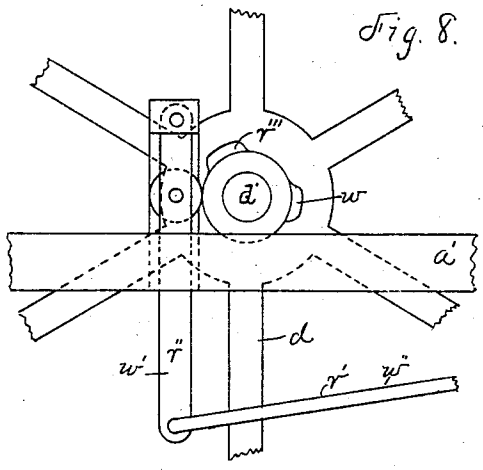

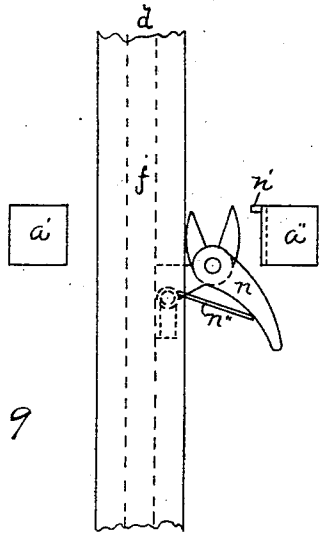

Fig. 9

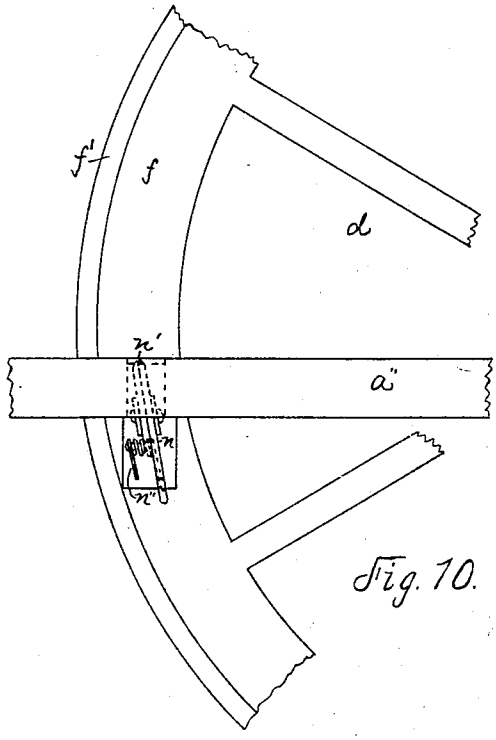

Fig. 10.

WITNESSES:

F. B. Townshend.

Paul Strong

INVENTOR

John A. Scharf

BY

C. D. Hudgens

ATTORNEY.

THE NORRIS PETERS CO., PHOTO-LITHO., WASHINGTON, D. C.

UNITED STATES PATENT OFFICE.

JOHN A. SCHARF, OF RICHWOOD, OHIO.

MACHINE FOR MAKING HAY-TIES.

SPECIFICATION forming part of Letters Patent No. 590,338, dated September 21, 1897.

Application filed September 14, 1896. Serial No. 605,746. (No model.)

To all whom it may concern:

Be it known that I, JOHN A. SCHARF, a citizen of the United States, residing at Richwood, in the county of Union and State of Ohio, have invented a new and useful Improvement in Machines for Making Hay-Ties, of which the following is a specification.

The object of my invention is to provide a machine for making wire hay-ties used in tying hay-bales and is composed of the parts described in the following specification and the accompanying drawings, in which—

Figure 1 is an elevation; Fig. 2, an elevation of the opposite side, and Fig. 3 is a plan view of the complete machine. Fig. 4 is a detail elevation of a part of the main wheel and accompanying parts. Fig. 5 is a detail of the clamp m'. Fig. 6 is a detail plan view of the parts shown in Fig. 4. Fig. 7 is an edge view of a part of the wheel d and pinion s. Fig. 8 is a detail of the hub of the main wheel, showing cams and followers. Fig. 9 is an edge view of a part of the main wheel, showing shears n. Fig. 10 is a detail side view of parts shown in Fig. 9.

Similar letters refer to similar parts throughout the several views.

The main frame of the machine is composed of the three longitudinal bars a, a', and a'' and cross-bars b and b' and the bars c and c'. Between the bars a' and a'' the wheel d is mounted on the shaft d', resting in the boxes d'', with the belt-pulley e on the end of the shaft d'. The rim of the wheel d is formed of the web f and flange f', a segment of which is stopped off on one side of the wheel from end to end of the rack g on the face of the web f. On the side of the web f on which the rack g is located is the arm h, with the point h' and the axis h'' passing through the web f and terminating in the latch i. Attached to the web f and surrounding the axis h'' and connecting at one end to it is the spiral spring j, which holds the arm h in a normal position, except when drawn over by drawing the wire from the spool.

The operation of the parts above described in conjunction with the other working parts is as follows: A strand of wire k is passed through the clamp k' and the eye l of the guide l', pivoted into the bars a' and a'' at l'' and held in the normal position by the spring m. From the eye l the wire k passes through the clamp m' and over the notched end of the bar c' to the point where the shears n cut it off. As the wheel d rotates, the cam o, as shown in Fig. 4, operates the lever o', which is connected by the rod o'' to the crank p, the opposite end of which connects by the rod p' to the arm p'', which causes the looper q to make a half-revolution, bending the end of the wire k around the twister q' into the jaws of the clamp m', which shuts tightly onto the wire k by the operation of the rod q'', connected from the clamp m' to one end of the crank r, from the other end of which the rod r' connects to the lever r'', which is operated by the cam r'''. When the wire k is thus secured into the clamp m', the twister q' makes several rotations by the rack g engaging with the pinion s. The pinion s is provided with the collar s', having the flat side s'', which is designed to rest in contact with the edge of the flange f' and retain the twister with its point up, except when the rack g comes into contact with the pinion s, at which point the flange f' stops off from end to end of the rack g to permit the flat side of the collar s' to disengage and rotate freely.

The rack g is of proper length to give the pinion s any desirable number of complete revolutions, so that when it leaves the pinion s the twister will stand with the point up and the flat surface s'' of the collar s' will be toward the flange f' and in position to engage with it. By the rotation of the twister q' a loop is twisted on the end of the wire k, and as the wheel d continues to rotate the arm h moves upward and the point h' passes closely in front of the twister q' and passes into the loop formed in the wire and raises it from the twister q' and moves upward and rearward as the wheel d continues to revolve, drawing the wire from the spool through the clamps k' and m', which have now been released by their respective operating-cams. As the wheel d continues to rotate, the arm h turns on its axis h'', so that the tension of the wire k keeps the end on which the point h' is located held toward the direction of the pinion s, and when diametrically opposite the pinion s the latch i engages with the catch u, operated by the spring u', at which point the shears n pass by the pinion s and cut off the

wire k by the strike n' causing the shears to close while passing that point. After passing the strike n' the shears n are thrown open and ready for the next passage by the spring n''. The tie is now made and cut off, the cut end falling into one of the holders t''. As the wheel d continues its rotation the arm h passes the holder t'' at that end of the machine which catches the loop end of the tie and the point h' passes out of the loop, and as it passes the trip w'' the catch u is thrown over and the latch i is released, when the spiral spring j instantly throws it over and it locks into the catch t, as in Fig. 4, and the arm h and point h' are in normal position ready to pick the next loop from the point of the twister q'. Immediately after passing the twister q' and raising the loop the catch t strikes the trip-pin v, which releases the latch i and permits the arm h to gradually make its half-rotation on its axis as made necessary in pulling the wire from the feed-spool.

With each revolution of the wheel d a complete tie is made and deposited in the holders t''.

The function of the guide l', as above described, is to hold the wire k in proper position, and it is pivoted at the two points l'' to allow its end l to be lifted upward as the arm h approaches the highest point on the wheel d in making its revolution. After the arm h passes the twister q' the clamp m' opens and releases the wire, allowing it to have a direct pull from the clamp k' to the arm h, thus avoiding a short bend, which would otherwise be made at the clamp m' as the arm approached the highest point on the wheel d. After the arm h passes the highest point and descends toward the opposite side the wire k lowers to a horizontal position and the spring m forces the guide l' down to its normal position. The function of the clamp k' is to hold the wire k in tension while being drawn through it as the wheel d revolves and, when drawn to the point where the shears n cut off the tie, to hold it absolutely tight. This is done by the cam w, operating the lever w', and the rod w'', attached to one end of the crank k.

The clamp k' is held in normal tension by the spring x acting against the crank k''. All of the various parts as described above are so located in their relative positions that each one acts in proper time to perform its part of the entire process in making a complete tie. If it should be necessary or desirable to make ties of shorter lengths, the web f of the wheel d may be widened at the point where the arm h is located and several holes provided on a radial line for the axis h'' and different and longer arms h be made to set into any of the holes provided for making shorter ties. The method of imparting power to the shaft d' may be by the belt-pulley e or by a hand-crank attached in its place. In place of the pulley e a large cog-wheel may be attached, engaging with a pinion on a countershaft provided with a belt-pulley.

As described in the foregoing specification and shown in the accompanying drawings, I claim as my invention and desire to have secured by Letters Patent—

1. In a hay-tie machine, the combination of a main frame composed of longitudinal and cross bars, and mounted thereon a main shaft carrying a main wheel provided with a flanged rim, a rack on said rim engaging with and operating a pinion mounted on an axis with its end pointed and bent at a right angle forming a twister, a looper for bending a wire around said twister forming a loop, cranks, rods, and cams on the main shaft for operating said looper, an arm on the main wheel with latch-catches and springs operating therewith to retain in proper position a finger for lifting the loop of the tie from the twister and drawing its proper length from the feed-spool, a shears on the rim of the main wheel operated by a strike on the main frame for cutting the tie at the proper point, a strike on the main frame for releasing the loop-lifter and allowing it to assume its normal position, a spring-guide for guiding the wire, a clamp in front of the twister with crank, rod, and cam on main shaft for operating said clamp, a tension-clamp at the end of the main frame with means for operating it from the main shaft by cam, rod, and crank, and a spring operating with said crank for keeping the wire in normal tension, substantially as shown and described for purposes stated.

2. In a hay-tie machine, the combination of a frame carrying a main wheel provided with flanged rim, a rack on said rim operating a pinion with a twister forming a part thereof, a looper for bending loop in tie and operated by cam, rods, and crank, an arm on the main wheel with latch-catches and springs operating therewith to retain in proper position a finger for lifting loop of tie from twister and drawing its proper length from feed-spool, the spring-guide for guiding the wire, the clamp in front of the twister, the tension-clamp at end of frame, cranks and rods connecting with levers operated by cams on main-wheel shaft for operating said clamps, substantially as shown and described for purposes stated.

3. In a machine for making hay-ties, the combination of a frame, and mounted thereon a main wheel in operative engagement with a shaft of form for twisting a loop, a shaft of form for bending said loop with means for operating the same, means for regulating the tension of the feed-wire, an arm on the main wheel of form for releasing the loop and drawing the tie to its proper length, means for holding said arm in its different operative positions, and a cutter attached to the main wheel with means for operating it in cutting the tie, substantially as shown and described.

4. In a machine for making hay-ties, the

combination of a frame, and mounted thereon a main wheel in operative engagement with a bent shaft for twisting a loop, a bent shaft for bending said loop with means for operating said shaft, clamps for governing the tension of the feed-wire with means for operating said clamps, means for releasing the tie-loop from the twisting mechanism and cutting the wire tie when drawn to its proper length, substantially as shown and described.

JOHN A. SCHARF.

In presence of—
HENRY ROHR,
J. S. MEARS.