Sept. 14, 1926. 1,599,961

A. W. HALL ET AL

AUDIPHONE

Filed August 1, 1924

Fig. 1

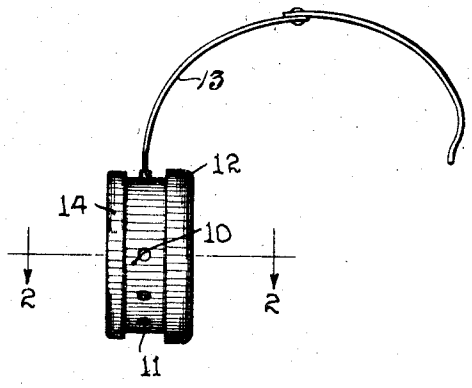

Fig. 2.

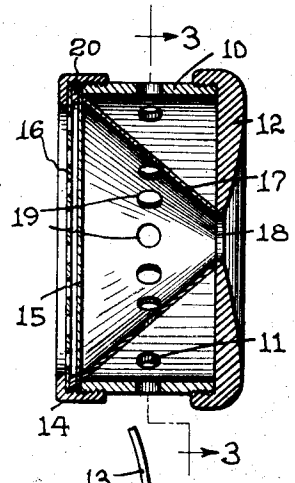

Fig. 4.

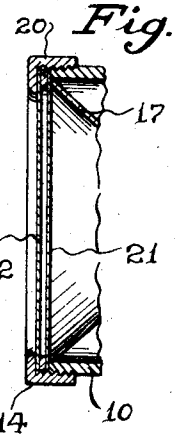

Fig. 3.

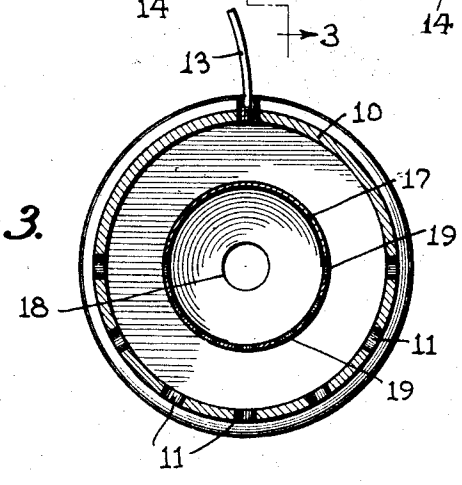

Inventors

ALFRED W. HALL &

JOHN R. DONNELLY

By [signature] Attorney

Patented Sept. 14, 1926.

1,599,961

UNITED STATES PATENT OFFICE.

ALFRED WINSLOW HALL AND JOHN RICHARD DONNELLY, OF PORTLAND, MAINE.

AUDIPHONE.

Application filed August 1, 1924. Serial No. 729,595.

Our said invention relates to audiphones and it is an object of the same to provide a device of this character which shall remedy the difficulties arising from impaired hearing and which shall be simple and inexpensive.

Referring to the accompanying drawings which are made a part hereof and on which similar reference characters indicate similar parts,

Figure 1 is a side elevation of our device,

Figure 2, a section on line 2—2 of Figure 1,

Figure 3, a section on line 3—3 of Figure 2, and

Figure 4, a fragmentary section similar to Figure 2 showing a modified form of the invention.

In the drawings reference character 10 indicates the body of the device which is provided with a plurality of perforations 11 spaced circumferentially of the body. An end closure 12 has threaded engagement with the body at one end thereof, this end closure being reduced centrally to provide space for the ear, it being our purpose to allow the device to rest against the head of the user. For this purpose we provide a holder 13 to extend over the head and this may have an audiphone at each end after the manner of a telephone head-piece if desired. Obviously the device can be mounted on a holder to be held in the hand or in other convenient manner.

At the opposite end of the body a flanged ring 14 has threaded engagement with the body, said ring holding a diaphragm 15 in place on the body. Preferably a wire screen 16 is secured to the device in a manner to cover and protect the diaphragm and this screen may be held in place on the ring 10 by the flange ring 14, the diaphragm 15 resting against the end of the body portion 10 and a washer 20 of sound insulating material such as fiber or paper or the like is interposed between the diaphragm and the screen.

Between the end closures a funnel-shaped device 17 is retained by engagement with said end closures and the body, this device being shaped like a megaphone but having its smaller end located in line with the opening 18 in the end closure 12 whereby the vibrations of the diaphragm 15 are collected and carried to the ear. The funnel has a series of perforations 19 corresponding to those in the body and it will be understood that the series of perforations may extend all the way around the body or only part way as may be found most practical for different persons or for different purposes.

In the use of our device it will be seen that the sound waves striking on the diaphragm 15 will cause it to vibrate. Those vibrations will be collected by the funnel and directed to the ear. One of the important features of construction in this device is that provision by which sound waves can also enter between the perforations 11 and 19 at the rear of the diaphragm which appears to increase and magnify the vibrations of the diaphragm so as to increase the effect on the ear. The reason for the improved function is perhaps not fully understood by us but experiments show that greatly improved results are had where these holes are provided in proper number. If these holes are closed the sound is deadened which is partly due to the dead air spaces within the instrument. Whether this be the reason or not the fact remains as stated. The device is simple and cheap in construction but it is effective for the purpose of improving impaired hearing.

In Figure 4 we have shown a modified form of the device in which the body 10 of flanged ring 14, the washer 20 and the frustoconical member 17 may be similar to the parts heretofore described. A diaphragm 21 of steel is situated between the washer 20 and the body 10 and a secondary diaphragm 22 of mica is located between the washer 20 and the outer flange of the ring 14. This arrangement is found to intensify the sounds more than either diaphragm by itself. Apparently the mica diaphragm receives the weaker sounds or vibrations from the outside of the phone and transmits them to the steel diaphragm while the steel diaphragm receives the heavier sounds or vibrations through the apertures in the body 10 and the truncated cone 17. The diaphragms 21 and 22 may sometimes be transposed with desirable results and equivalent materials may be found equally effective.

It will be obvious to those skilled in the art that various other changes may be made in our device without departing from the spirit of the invention and therefore we do not limit ourselves to what is shown in the

drawings and described in the specification, but only as indicated in the appended claims.

Having thus fully described our said invention what we claim as new and desire to secure by Letters Patent is:

1. An audiphone comprising a body, a funnel supported thereby said funnel adapted to communicate at its inner end with the ear, and a diaphragm at the outer end of the funnel said body and said funnel having similarly located perforations, substantially as set forth.

2. An audiphone comprising a body, a funnel thereon communicating at its inner end with the ear, a diaphragm at the outer end of the funnel, and perforations corresponding in size and number extending through the body and the funnel, substantially as set forth.

3. An audiphone comprising a body, a funnel thereon communicating at its inner end with the ear, a diaphragm at the outer end of the funnel, similarly located perforations extending through the body and the funnel, and means for supporting the device in operative position relative to the ear, substantially as set forth.

4. A device of the character described comprising a cylindrical body, a centrally perforated end closure next to the ear, a diaphragm at the other end of the body, means for holding said diaphragm in place, and a funnel within the body having its outer end fitting within the cylindrical body adjacent said diaphragm and its inner end fitting about the perforation in said end closure, substantially as set forth.

5. A device of the class described comprising a hollow body formed with open ends, a funnel of substantially the same length as said body and located within the same, a diaphragm secured at one end of said body, and a closure for the opposite end of said body having a perforation disposed in alinement with the smaller end of the funnel, said funnel and body being provided with transverse openings, substantially as set forth.

In witness whereof, we have hereunto set our hands and seals at Portland, Maine, this 28th day of July, A. D. nineteen hundred and twenty-four.

JOHN RICHARD DONNELLY. [L. S.]
ALFRED WINSLOW HALL. [L. S.]