United States Patent [19]

Malach

[11] **3,881,169**

[45] **Apr. 29, 1975**

[54] **EMERGENCY VEHICLE TRAFFIC CONTROLLER**

[75] Inventor: **Henry G. Malach**, Beaumont, Tex.

[73] Assignee: **Traffic Control Products, Inc.**

[22] Filed: **June 1, 1973**

[21] Appl. No.: **366,089**

[52] **U.S. Cl.** **340/32**

[51] **Int. Cl.** **G08g 1/07**

[58] **Field of Search** 340/32, 34, 36

[56] **References Cited**

UNITED STATES PATENTS

1,705,323	3/1929	Adler	340/36
2,963,693	12/1960	Capalozza	340/34
3,247,482	4/1966	Lesher	340/32 X
3,465,294	9/1969	Carsello et al.	340/171 R
3,638,179	1/1972	Coll et al.	340/32
3,735,342	5/1973	Helliker et al.	340/34

Primary Examiner—William C. Cooper

Attorney, Agent, or Firm—Browning and Bushman

[57] **ABSTRACT**

Controlled street intersections are equipped with an audio detector and emergency controller for automatically regulating the intersection traffic signals to initiate a predetermined traffic flow pattern at the approach of an emergency vehicle. The detector is responsive to a multiple tone audio frequency signal having predetermined frequency and time characteristics emitted by the emergency vehicle. Equipment in the controller determines when the detector is presented with a signal in which predetermined frequencies occur within an established time period. When these conditions are met, the emergency controller automatically provides the desired traffic signal to assist the emergency vehicle through the intersection. When the emergency vehicle's audio signal is out of range of the detector for a predetermined length of time, normal operation of the traffic signal is automatically reinitiated. Phase detecting means are included in the controls so that the normal red, amber and green cycles follow with normal duration after the emergency control system is deactivated. A plurality of controllers may be employed to regulate traffic flow in all directions at any multi-street intersection.

10 Claims, 6 Drawing Figures

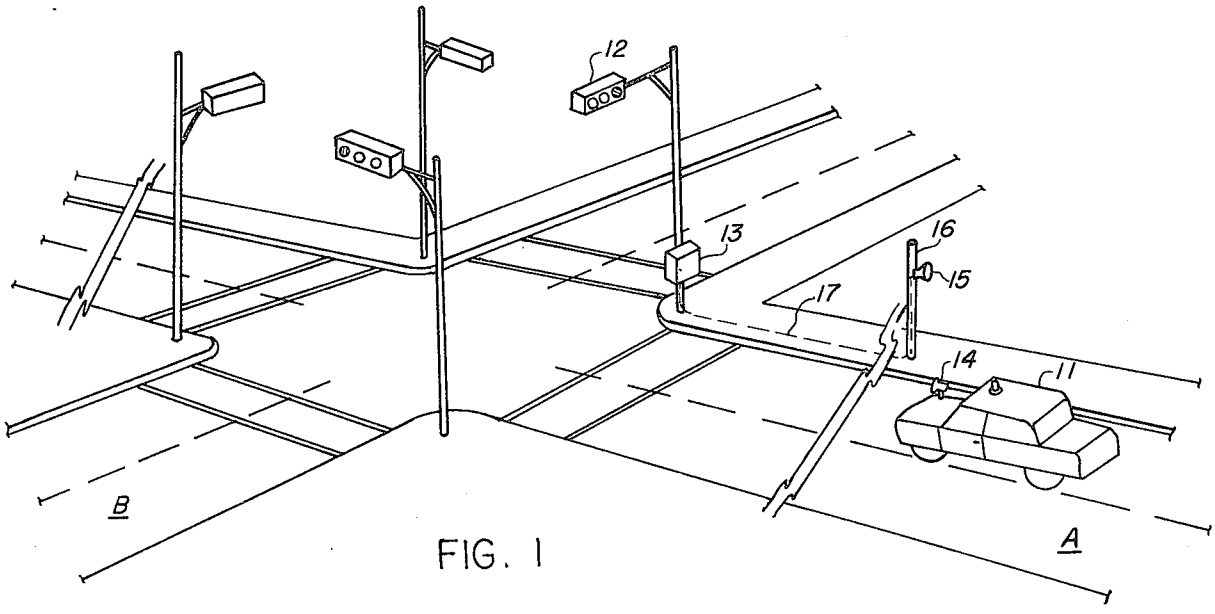

FIG. 1

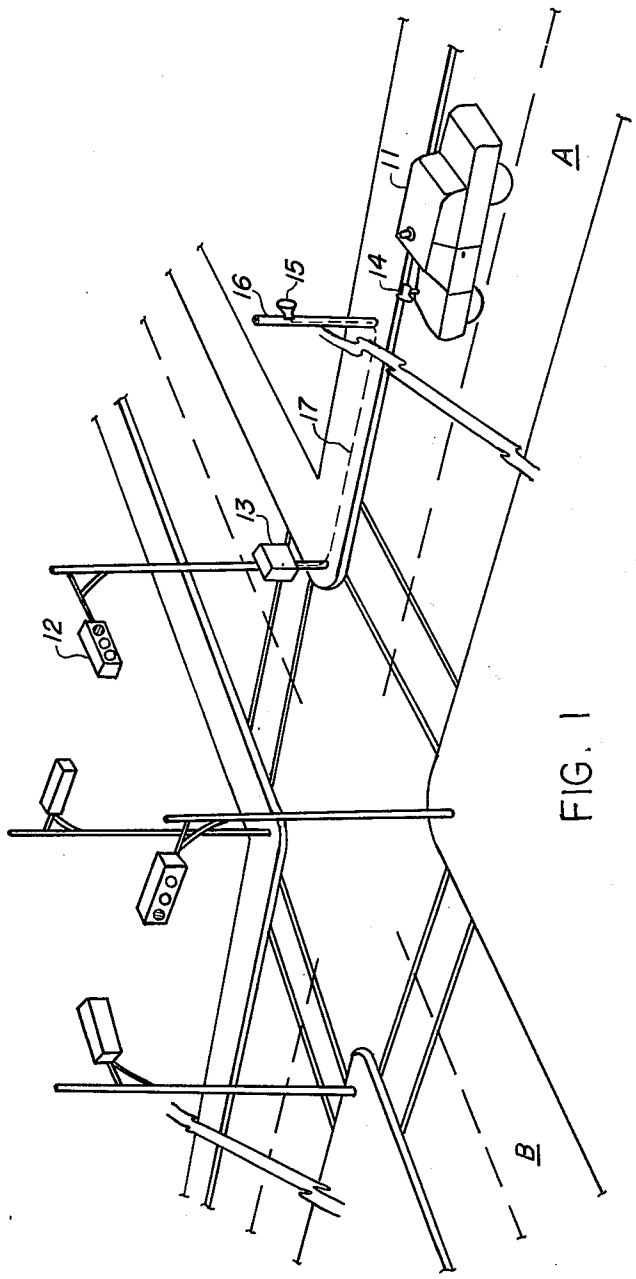
A
B
11
12
13
14
15
16
17

FIG. 1

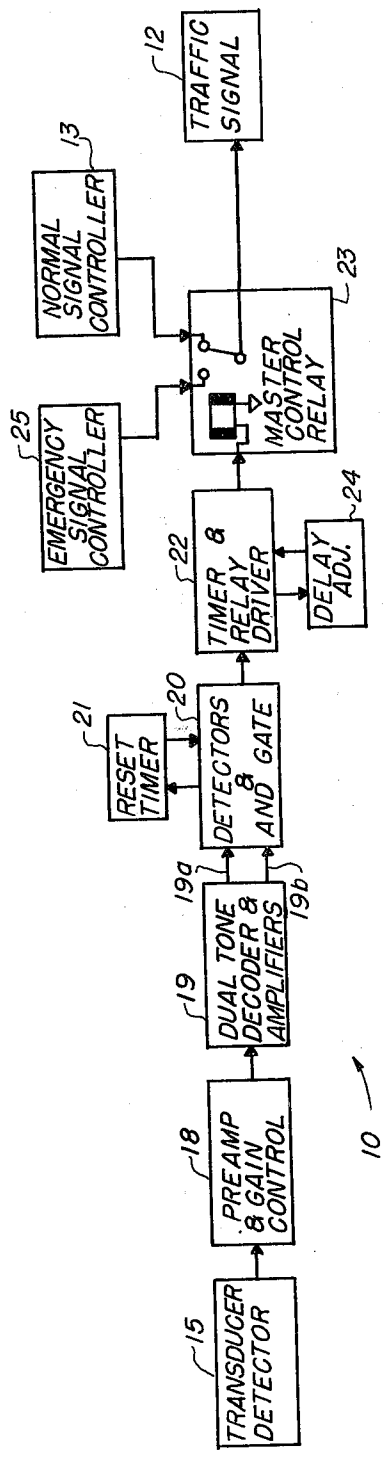
TRANSDUCER DETECTOR
15
PREAMP & GAIN CONTROL
18
DUAL TONE DECODER & AMPLIFIERS
19
19a
19b
DETECTORS & AND GATE
20
RESET TIMER
21
TIMER & RELAY DRIVER
22
DELAY ADJ.
24
MASTER CONTROL RELAY
23
NORMAL SIGNAL CONTROLLER
13
EMERGENCY SIGNAL CONTROLLER
25
TRAFFIC SIGNAL
12
10

FIG. 2

FIG. 3A

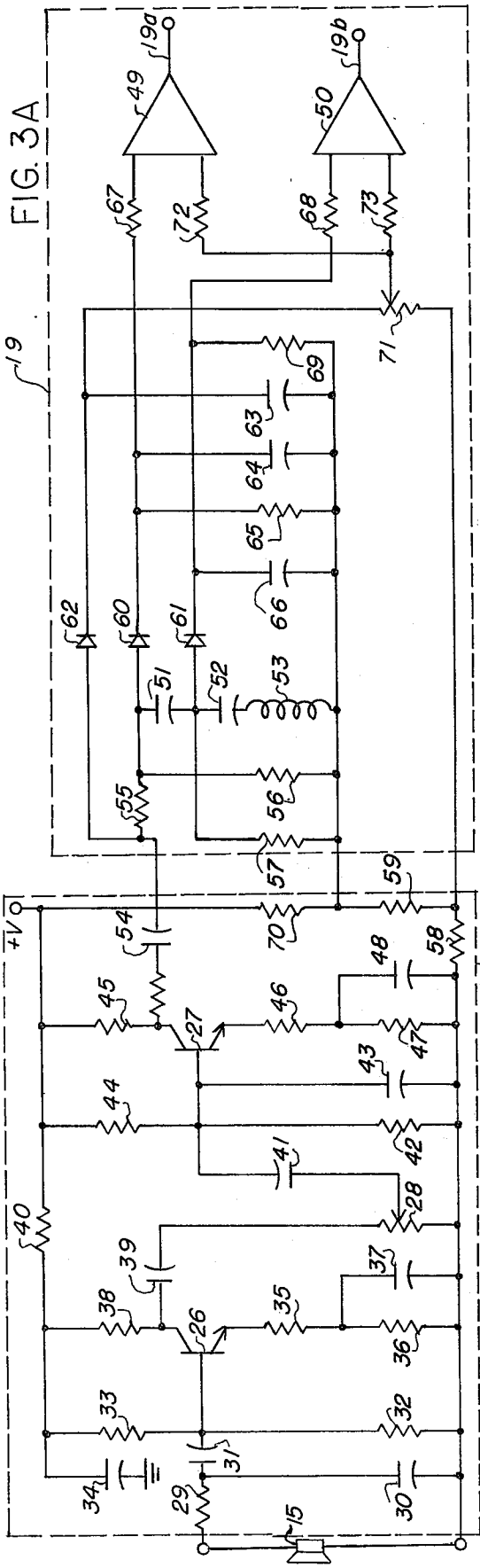

FIG. 3B

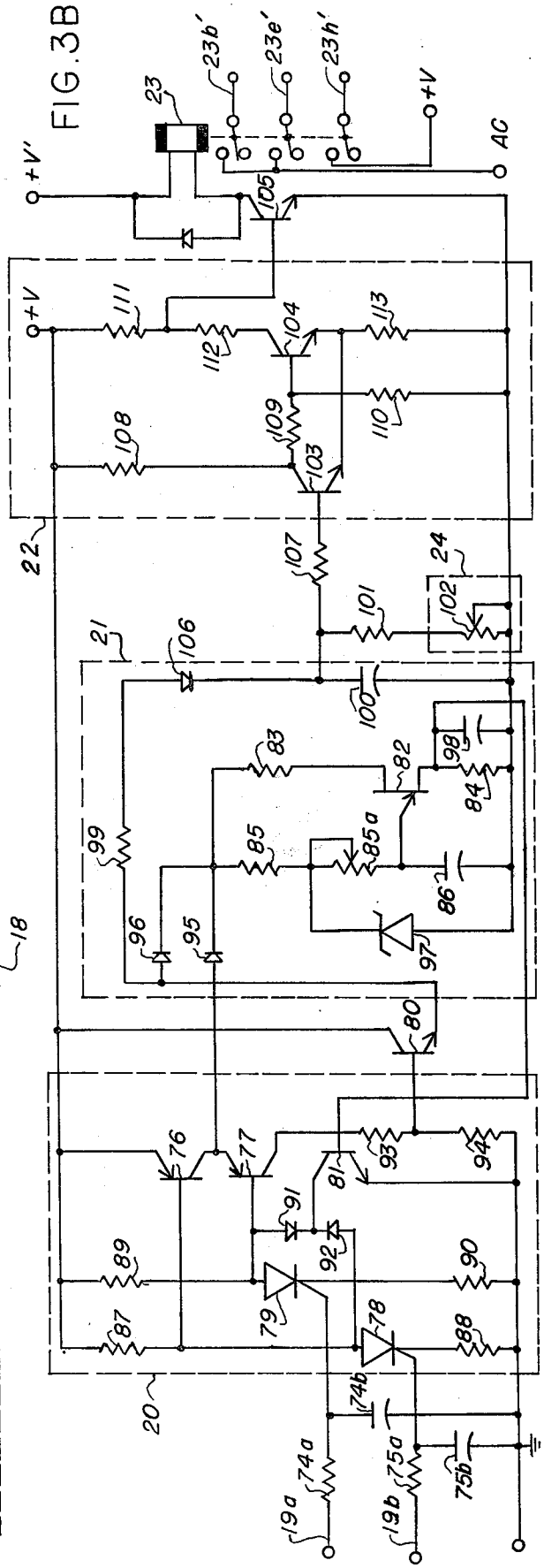

FIG. 4

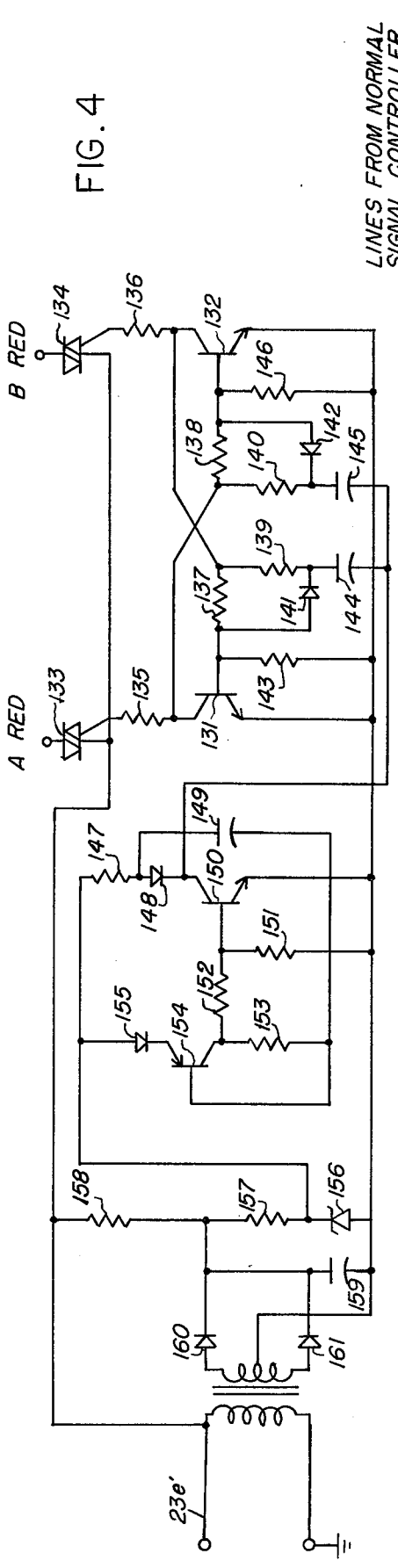
B RED
A RED
134
136
132
133
135
131
146
138
140
142
145
139
137
141
144
143
147
149
150
148
151
152
155
154
153
158
157
156
159
160
161
23e'

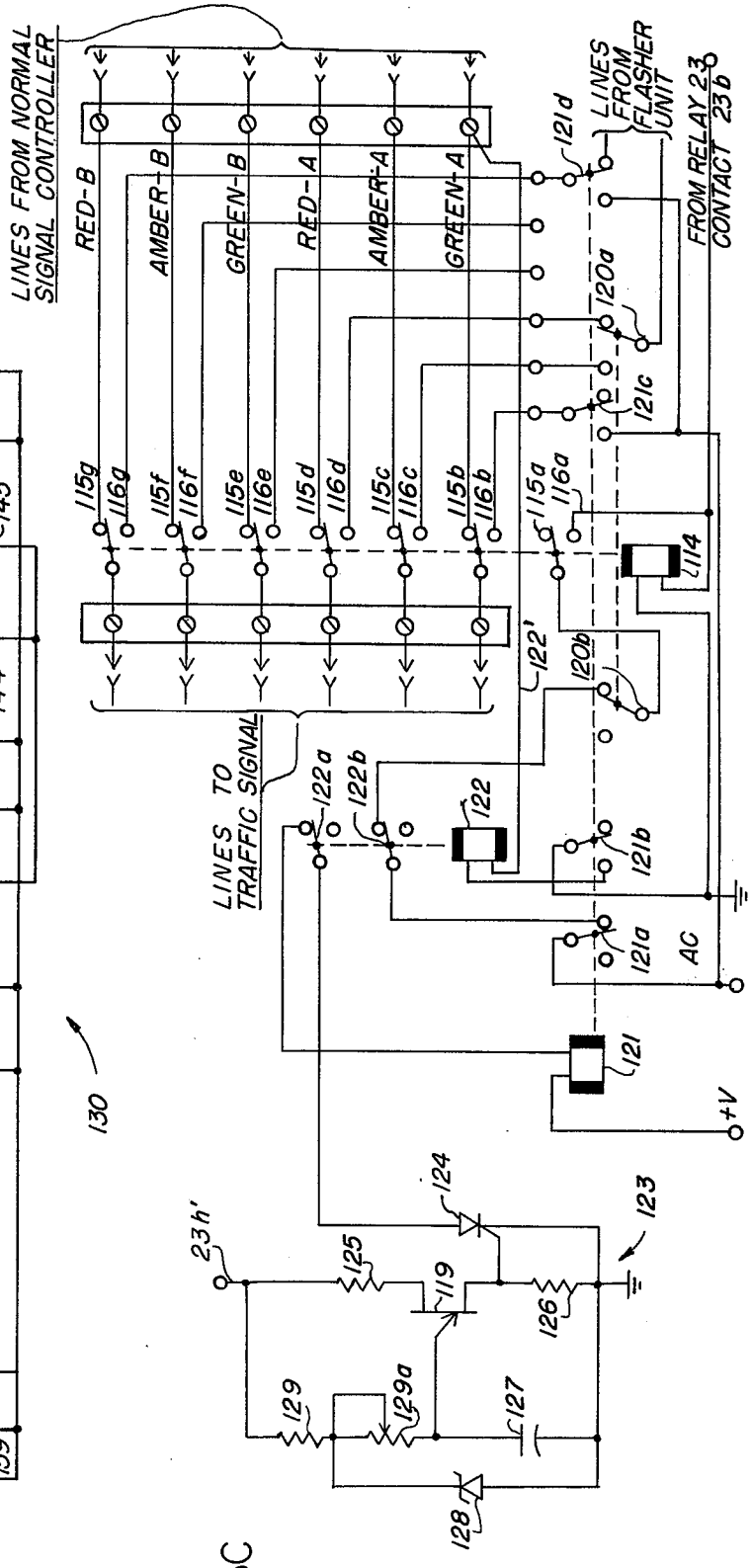
LINES FROM NORMAL SIGNAL CONTROLLER
RED-B
AMBER-B
GREEN-B
RED-A
AMBER-A
GREEN-A
115g
116g
115f
116f
115e
116e
115d
116d
115c
116c
115b
116b
115a
116a
121d
LINES FROM FLASHER UNIT
FROM RELAY 23 CONTACT 23b
120a
121c
114
122'
120b
LINES TO TRAFFIC SIGNAL
122a
122b
122
121b
121a
AC
121
+V
130
124
123
23h'
125
119
126
129
129a
127
128

FIG. 3C

EMERGENCY VEHICLE TRAFFIC CONTROLLER

BACKGROUND OF THE INVENTION

1. Field of the Invention

The present invention relates to means for regulating the flow of traffic through intersecting streets. More particularly, the present invention relates to a means by which an emergency vehicle can regulate a traffic control signal at an intersection to permit the vehicle to safely proceed through the intersection.

2. Brief Description of the Prior Art

Conventional systems designed to regulate the operation of a traffic control system at an intersection have usually included radio frequency transmitters carried by the emergency vehicle and suitable radio frequency receivers located at the controlled intersection. While such systems have the capability of controlling traffic in any desired manner, they are undesirable to the extent that each emergency vehicle in the system must be equipped with a special radio transmitter.

Any traffic control system which is responsive to a particular frequency, whether in the audio frequency or radio frequency range, may be falsely activated any time a signal with the specified frequency occurs within range of the detector. The susceptibility to noise of conventional prior art systems, the expense of equipping vehicles with special radio transmitters, or in some cases special light transmitters, and the susceptibility of all of such systems to improper triggering render such systems undesirable. One prior art system proposes reducing false triggering by employing a dual frequency RF signal. While this approach is in many respects superior to single frequency systems, the cost associated with equipping emergency vehicles with RF transmitters may be undesirably high. Moreover, any vehicle equipped with radio transmitters must also be equipped with a conventional audio signal to alert other motorists.

SUMMARY OF THE INVENTION

Many of the emergency vehicles now in operation are equipped with a two-tone audio frequency siren or emergency signal which is employed to provide an audible warning of the approach of such vehicles. Usually, the two tones are alternated and repeated at an established rate. The facts that multiple tones or frequencies are present in the warning sound and that all frequencies of the sound are present within a given time period are employed in the present invention to provide a system which is exceptionally immune to false triggering and which is inexpensive to employ since the transmitting portion of the system is already present in the audio alarm sound of many emergency vehicles.

The controller portion of the invention employs an audio frequency detector to pick up audio frequency signals in the vicinity of the intersection. Filters in the system preferentially pass only those two frequencies which are present in the two-tone emergency sound. These two frequencies are amplified and transmitted to a second portion of the circuit which determines whether the two frequencies persist over an established period of time. When both frequency and time duration conditions are met, the system automatically initiates emergency control of the intersection signals.

Once the emergency vehicle has cleared the intersection, normal operation of the traffic signal is initiated without changing the normal time duration or light color sequence of the signals.

These and other features, advantages and objects of the invention will be more readily understood from the following specification, related drawings and the claims.

BRIEF DESCRIPTION OF THE DRAWINGS

FIG. 1 illustrates a street scene at an intersection at which the present invention is employed;

FIG. 2 is a block diagram illustrating one form of the present invention;

FIGS. 3A, 3B and 3C are detailed schematic circuit diagrams of one form of circuitry capable of use in the present invention; and

FIG. 4 schematically illustrates one form of a flasher unit which may be employed in the present invention.

DESCRIPTION OF THE ILLUSTRATED EMBODIMENT

Referring to the drawings, FIG. 1 shows a street scene at an intersecting main street A and cross street B equipped with the emergency vehicle detector system of the present invention. As illustrated, an emergency vehicle **11**, having a suitable two-tone, audio frequency transmitting device is shown approaching the intersection at which the receiver portion of the present invention is located.

The receiver operates with a traffic control system which includes a traffic light **12** and a signal controller or traffic control box **13**. The transmitter portion which is represented by a siren **14** is mounted on the vehicle **11**. Since suitable transmitting devices are commercially available the siren **14** does not form a part of the invention except to the extent that the siren must be of the type which produces at least two different frequencies of emitted audio frequency energy. In the preferred form of the invention, the emitted energy is a two-tone audio frequency signal of 600 Hz and 900 Hz.

The receiver portion of the invention is represented by its detector element, or transducer **15** which is mounted above the traffic level on a standard **16** located away from the intersection so that ambient noise at the intersection will not adversely affect the operation of the system. The detector **15** is only a portion of the receiver, the rest of which is preferably located in the control box **13**. Interconnection between the control box **13** and the detector **15** is provided by a suitable electrical conductor **17**.

With reference to FIG. **2**, the block diagram of the emergency vehicle detector system of the present invention is generally indicated at **10**. The system **10** receives audio signals emitted by the siren **14** mounted on the vehicle **11** through the detector transducer **15**. The transducer **15** converts the detected audio signal into a low amplitude electrical signal which is then amplified by a variable gain preamplifier **18**.

To avoid erratic operation of the system **10**, by ambient or extraneous noises, a dual-tone decoder and amplifier circuit **19** is employed as a first means of preventing false triggering. As will hereinafter be explained in greater detail, the decoder and amplifier preferentially passes and amplifies only those signals having the predetermined frequencies of the siren **14**. The detected signals having the frequency of one tone of the siren signal are formed on an output **19*a*** and those having the frequency of the second tone are

formed on an output 19*b*. The passed and amplified signals from the circuit 11 are applied to a detector circuit 20 which determines if both tones are present in the detected signals within a predetermined time period corresponding to the repetition rate of the two audio frequency sounds emitted by the siren.

If both tones do not occur within the required time, a reset timer 21 will reset the detector circuit 20 so that subsequently detected signals may be examined. Thus, the detector circuit 20 and reset timer circuit 21 form a second means for preventing false triggering of the system 10. If both signals from the detector circuit 19 are present within the required time period, a timer 22 is activated to energize a master traffic controller relay 23. A delay adjustment 24 is provided to control the hold time of the timer 22. The setting of the delay adjustment 24 determines the length of time the traffic light is under the control of the system 10.

During normal operating conditions, the relay 23 is deenergized and the traffic light 12 is under the control of the normal signal controller 13. Energizing the relay 23 disconnects the normal signal controller 13 and connects an emergency signal controller 25 with the traffic signal 12. It will be appreciated that the emergency controller 25 can have a plurality of operating functions, however, one of the preferred functions is that of turning all of the lights in signals 12 to blinking red.

Details in the circuitry of the emergency vehicle detector 10 are schematically illustrated in FIGS. 3A–3C. In FIG. 3A, the detector 15, the pre-amplifier 18, and the dual tone decoder circuit 19 are represented. The detector 15 can be of any suitable type which will convert audio energy to electrical energy, such as a conventional speaker or microphone. In the present form of the invention, the detector 15 is preferably an all-weather speaker. The speaker 15 is connected to the input of the preamplifier 18 which employs two-stage amplification and variable gain. Amplification is provided by transistors 26 and 27 and the variable gain is provided by a potentiometer 28. Suitable components which may be used in the preamplifier 18 for one form of the invention are identified and described below in Table 1.

TABLE 1

IDENTIFYING NUMERAL	COMPONENT	
26,27	Transistor	2N5136
28	Potentiometer	10K
29	Resistor	1K
30, 43	Capacitor	.001 μF
31, 39, 41	Capacitor	.5 μF
32, 42	Resistor	6.2 K
33, 44	Resistor	100 K
34, 37, 48	Capacitor	300 μF
35, 46	Resistor	68
36, 47	Resistor	470
38, 45	Resistor	10 K
40	Resistor	820

All resistance values are stated in ohms.

The output of the preamplifier 18 is applied to the dual-tone decoder circuit 19 which includes two active filter networks employing operational amplifiers 49 and 50 and a frequency determining network formed by capacitors 51 and 52 and inductor 53. In the described form of the invention, components of the circuit 19 are selected such that the frequencies of 600 Hz and 900 Hz are passed and amplified and substantially all other frequencies are rejected.

Components for a suitable dual-tone decoder circuit 19 are identified and described below in Table II.

TABLE II

IDENTIFYING NUMERAL	COMPONENT	
51	Capacitor	.3μF
52, 63, 64, 66	Capacitor	.1μF
53	Inductor	1.2h
49, 50	Operational	Amp 741
54	Capacitor	.5μF
55	Resistor	470
56, 57	Resistor	15 K
58	Resistor	330
59	Resistor	47
60, 61, 62	Diode	1N 64
65, 69	Resistor	1M
67, 68, 72, 73	Resistor	100 K
70	Resistor	1 K
71	Potentiometer	500K

All resistance values are stated in ohms.

The output of each amplifier in the circuit 19 is applied to the detector and gate circuit 20 which includes RC time circuits for momentarily holding the signals received from the circuit 19. The circuit 20 includes resistors 74*a* and 75*a*, capacitors 74*b* and 75*b*, and, an AND logic gate comprised of transistors 76 and 77 and SCR's 78 and 79 which are employed to provide inputs to the AND gate.

When both the 600 Hz and 900 Hz signal are present, within a selected time interval, both of the SCR's are triggered and current flows from the SCR anodes to the cathodes so that the voltages present at the anodes are reduced. These reduced voltages cause transistors 76 and 77 to be biased into conduction which in turn biases a transistor 80 into conduction. If both signals are not present within the predetermined time period, the detector 20 is reset by a pulse generated by a reset timer 21. The timer 21 employs a transistor 82, resistors 83, 84 and 85 and capacitor 86 to form a unijunction relaxation oscillator. The positive going oscillator pulse is applied to the base of transistor 81 biasing it into conduction, which lowers the voltage at its collector to approximately zero volts. The collector of transistor 81 is connected to the anodes of the SCR's 78 and 79 so that the voltage drop turns the SCR's off to thereby reset the detector circuit. Typical components used in the decoder and gate circuit 20 and the reset timer circuit 21 are listed and described below in Table III.

TABLE III

IDENTIFYING NUMBER	COMPONENT	
74*a*, 75*a*, 85	Resistor	10K
74*b*, 75*b*	Capacitor	10μF
76, 77	Transistor	2N2905
78, 79	SCR	C22F
80, 81	Transistor	2N5136
82	UJT	2N1671
83, 94	Resistor	1K
85*a*	Potentiometer	25K
86	Capacitor	100μF
87, 89, 93	Resistor	6.8K
88, 90	Resistor	47
91, 92, 95, 96	Diode	1N914
97	Zener Diode	10v
98	Capacitor	20μF

All resistance values are stated in ohms.

Assuming that the requisite signals on lines 19*a* and 19*b* are present, the transistor 80 conducts producing a voltage drop across a resistor 99 which forms an RC

charging circuit with capacitor **100** and produces the potential required to trigger the timer and relay driver circuit **22.** The capacitor **100** is conducted in parallel with a resistive network comprising resistor **101** and potentiometer **102.** This network forms the discharging network for the capacitor **100** and determines the length of time that the energizing controller has control of the light **12.** The timer and relay driver circuit **22** is provided by a Schmitt trigger, transistors **103** and **104,** and transistor **105,** the latter having a high current handling capability for acting as a relay driver.

A complete listing and identification of components which may be used in the timer circuit **22** is given in Table IV.

TABLE IV

IDENTIFYING NUMBER	COMPONENT	
99	Resistor	10
100	Capacitor	50μF
101	Resistor	5 K
102	Potentiometer	25 K
103, 104	Transistor	2N5136
105	Transistor	2N798
106	Diode	1N914
107	Resistor	12 K
108, 112	Resistor	6.8 K
109, 110	Resistor	3.3 K
111	Resistor	10 K
113	Resistor	75

All resistance values are stated in ohms.

When the timer circuit **22** is activated, the relay driver transistor **105** is biased into conduction causing the relay **23** to be energized. The relay **23** is a master relay and controls an interface relay **114** which is shown in FIG. 3C. In a system that uses a series of spaced, synchronized traffic lights, it is desirable that the normal time sequencing of the controller be maintained even though the lights are being controlled by the energizing controller. To this end, relay **114** is employed to disconnect only the output lines of the normal controller **13** from the traffic signal **12** while the internal sequencing of the controller is permitted to continue. The relay **114** having contacts **115***a–g*, and **116***a–g* is connected in series with the normal signal controller **13** and the traffic light **12.** The contacts **115***a–g* are connected to lines coming from the controller **13,** and in the deenergized position connect lines from the controller **13** to the signal light **12.** Contacts **116***a–g* are used to connect the emergency controller **24** with the signal **12** when the relay **114** is energized.

When an emergency vehicle emits an audio signal having the desired frequencies and time periods, the detector system **10** energizes relay **23** which changes the position of the three associated relay contacts which in turn energizes relay **114** through a line **23***b'*, applies power to the emergency controller **25** through a line **23***e'* and starts a timer circuit **123** through a line **23***h'*. The timer circuit **123** is similar to the timer **21** employed to reset the detector and gate circuit **20.** Components used in the timer circuit **123** are identified and listed below in Table V.

TABLE V

IDENTIFYING NUMERAL	COMPONENT
119	UJT 2N1671
125	Resistor 1K
126	Resistor 470
127	Capacitor 100 μF
128	Zener Diode 10v
129	Resistor 10K
129*a*	Potentiometer 25K

All resistance values are stated in ohms.

After the timer **22** times out, relay **23** is deenergized which permits the associated relay contacts to move to the open position while relay **114** remains energized with coil power supplied through contact **116***a*. When timer **123** times out, a pulse is generated to trigger an SCR **124** which allows current to flow through the coil of relay **121** thereby energizing the relay to change the position of associated relay contacts **121***a–121d* from that shown in FIG. 3C. This in turn supplies a voltage to contacts **116***b* and **116***g* through relay contacts **121***c* and **121***d* to produce a solid green for right-of-way traffic and a solid red for cross traffic. Simultaneously, the normal controller **13** has been cycling and when relay **121** is energized, a path for current is provided for the coil of relay **122** by the contacts of **121***b* of relay **121.** When the normal controller returns to green for right-of-way traffic, an energizing voltage is supplied to the coil of relay **122** through line **122'** which opens relay contacts **122***a* and **122***b* to deenergize relays **114** and **121** and reset SCR **124.** The traffic signal **12** is thus returned to the control of the normal controller **13** without going through an improper color sequence and without having shortened color duration in the first sequence following return to normal control.

The emergency controller **24** can have a plurality of modes of operation depending on how the controller **24** is wired to the relay **114.** In addition to the mode described, a flashing amber for the right-of-way street A, and a flashing red for the cross-traffic, street B, could be employed. Other modes are also possible. Control of the modes can be effected by the positioning of switches **120***a* and **120***b*. In the position illustrated, all lights exhibit a flashing red and the phase detector **123** is in the circuit. In the second position, the phase detector is out of the circuit and the mode is blinking red for street B and blinking amber for street A. While the circuitry has been illustrated with three colors, red, amber and green, it will be appreciated that any lesser or greater number of signals may be employed.

A form of a flasher unit used in the present invention is illustrated in FIG. 4 and indicated generally at **130.** The flash unit includes a power supply, an oscillator, a bistable multivibrator employing transistors **131** and **132** which trigger triacs **133** and **134.** When in operation, the flasher unit **130** produces flashing light signals. The color and location of the flashing lights is determined by the location of the switches **120***a* and **120***b* in FIG. 3C.

Listed below in Table VI are typical components which may be used in the flasher circuit **130.**

TABLE VI

IDENTIFYING NUMBERAL	COMPONENT
131, 132, 150	Transistor 2N5136
133, 134	Triac SE45B
135, 136	Resistor 33
137, 138	Resistor 680
139, 140, 143, 146, 151	Resistor 10K

TABLE VI-Continued

IDENTIFYING NUMBERAL	COMPONENT
141, 142, 148, 155	Diode 1N914
144, 145	Capacitor .05 μF
147	Resistor 1.2K
149	Capacitor .47μF
152	Resistor 18K
153	Resistor 1.8M
154	Transistor 2N2905
156	Zener Diode 10v
157	Resistor 75
158	Resistor 56 2 watt
159	Capacitor 100 μF
160, 161	Diode Rectifier

All resistance values are stated in ohms.

The foregoing disclosure and description of the invention is illustrative and explanatory thereof, and various changes in the size, shape and materials as well as in the details of the illustrated construction may be made within the scope of the appended claims without departing from the spirit of the invention.

I claim:

1. A traffic controller for regulating traffic flow through a traffic intersection equipped with a traffic signal comprising:

a. detector means responsive to an audible, transmitted audio frequency warning signal which has been transmitted through the atmosphere from an emergency vehicle;

b. frequency selective means connected with said detector means for determining the presence of a plurality of selected audio frequencies in the transmitted signal;

c. timing means connected with said frequency selective means for determining whether all of said plural selected signals occur within a selected time interval; and

d. control means connected with said timing means and said frequency selective means and operable upon the occurrence of said plural selected signals within said selected time interval to operate said traffic signal in a non-normal, predetermined manner.

2. A traffic controller as defined in claim 1 further including second timing means connected with said controller for reinitiating normal operation of said traffic signal when said plural selected signals are absent as inputs to said traffic controller for a predetermined period of time.

3. A traffic controller as defined in claim 2 further including:

a. a normal controller for normal operations and adapted to cyclically produce different color lights in a predetermined color sequence; and

b. phase detecting means connected with said second timing means for reinitiating normal operations following termination of said non-normal, predetermined operation whereby the first color change of lights in said traffic signal following termination of said non-normal operation is from the color during non-normal operation to the next color in said predetermined sequences of colors.

4. A traffic controller for regulating traffic flow through a traffic intersection equipped with a traffic signal as defined in claim 3 wherein:

a. said normal controller includes means for regulating the duration of light production from each of said different color lights whereby each of said different color lights respectively produces light for a predetermined time period; and

b. said phase detecting means includes means for reinitiating control by said normal controller at the beginning of the respective time period for said next color in said predetermined sequence.

5. A traffic controller as defined in claim 1 wherein said selected audio frequency signals include signals of approximately 600Hz and 900Hz.

6. A traffic controller as defined in claim 4 wherein said selected audio frequency signals include signals of approximately 600Hz and 900Hz.

7. A traffic controller as defined in claim 5 wherein said selected time interval is approximately 2 seconds.

8. A traffic controller as defined in claim 6 wherein said selected time interval is approximately 2 seconds.

9. A traffic controller as defined in claim 1 wherein said non-normal predetermined manner comprises flashing red lights signaling all streets in said traffic intersection.

10. A traffic controller as defined in claim 1 further including selectively operable means for providing a plurality of non-normal modes of operation of said traffic signal.

* * * * *