Feb. 14, 1939. K. T. LANG 2,146,963

ROTARY PRINTING MACHINE

Filed May 20, 1936 4 Sheets-Sheet 1

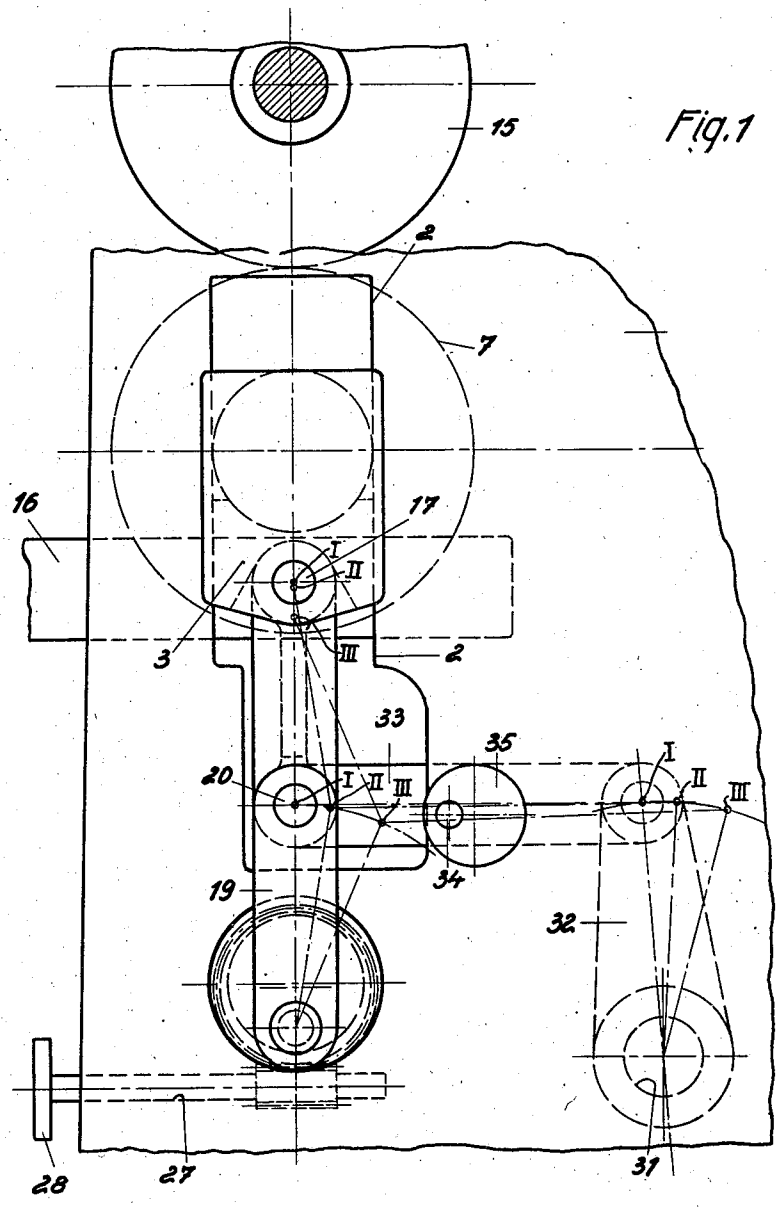

Fig. 1

Inventor:
Karl Theodor Lang

Feb. 14, 1939. K. T. LANG 2,146,963

ROTARY PRINTING MACHINE

Filed May 20, 1936 4 Sheets-Sheet 2

Fig.2

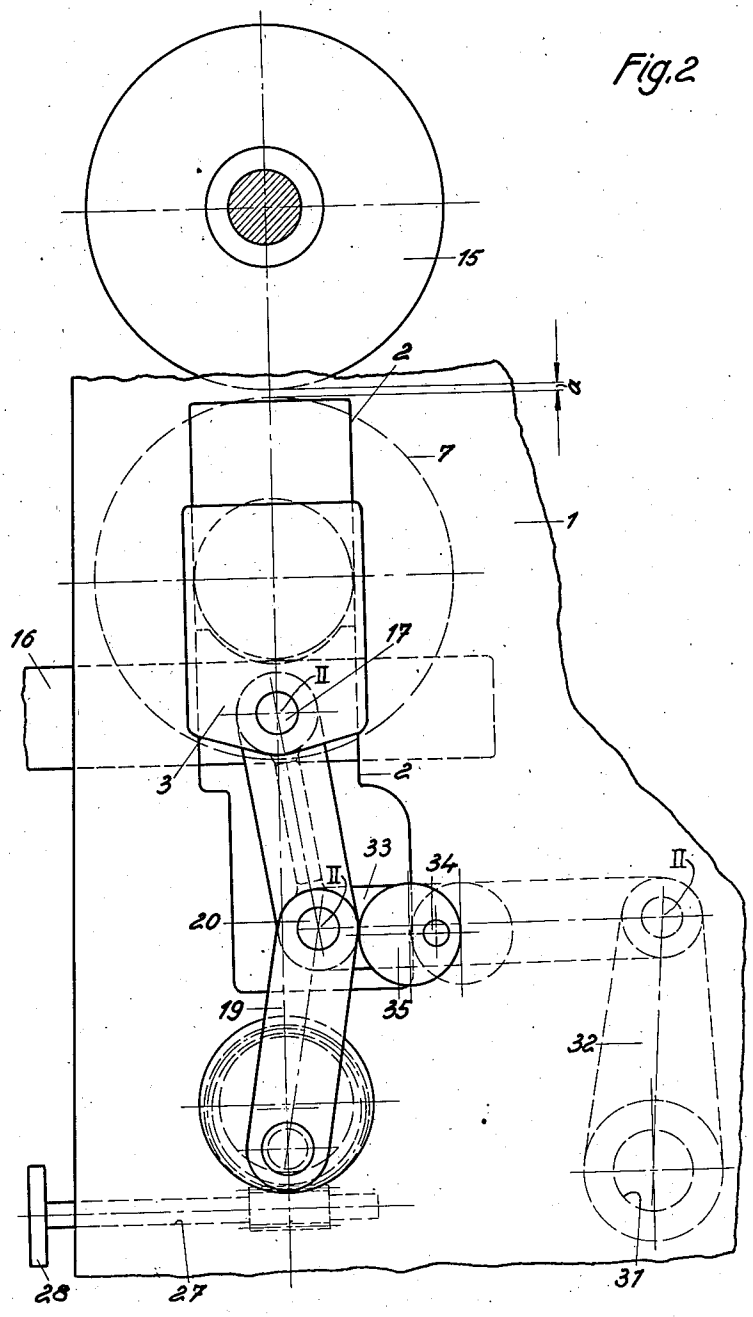

Inventor:
Karl Theodor Lang

Feb. 14, 1939. K. T. LANG 2,146,963

ROTARY PRINTING MACHINE

Filed May 20, 1936 4 Sheets-Sheet 3

Fig. 3

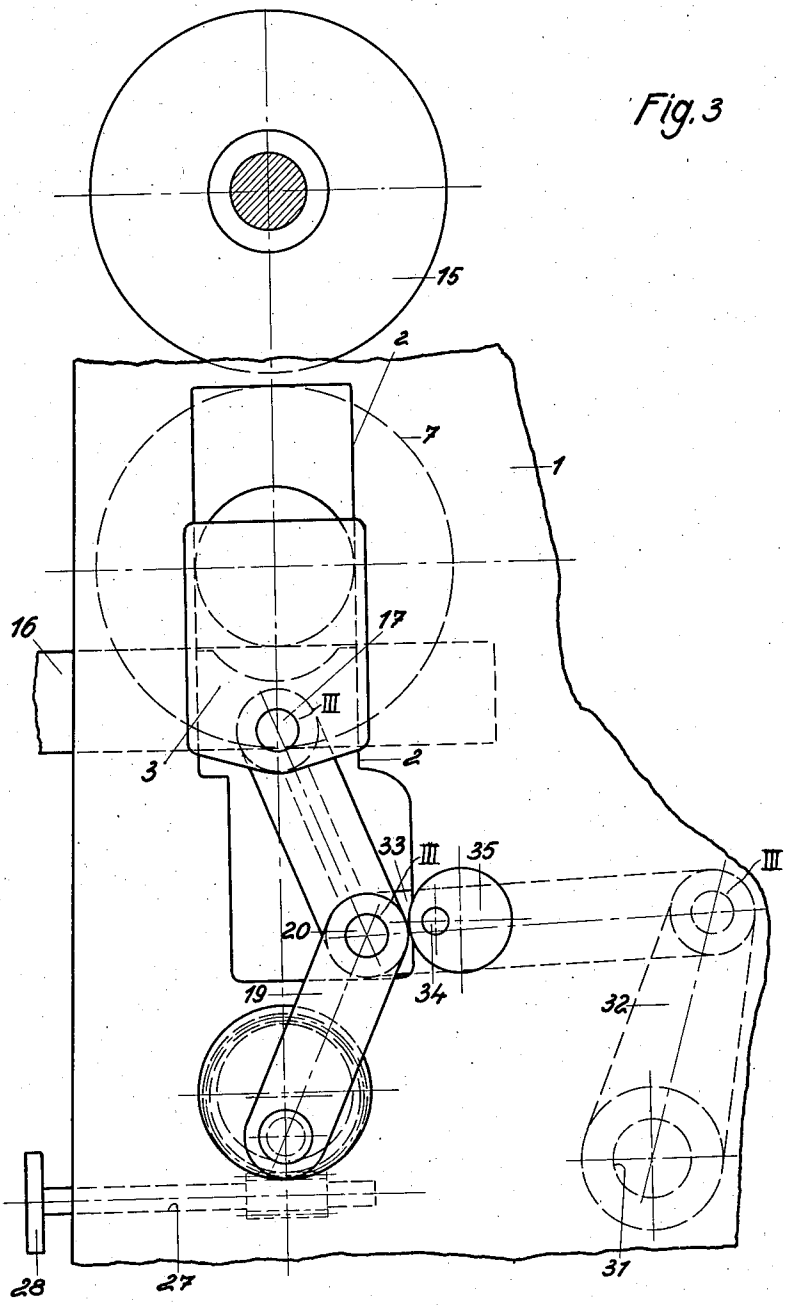

Inventor:
Karl Theodor Lang

Feb. 14, 1939. K. T. LANG 2,146,963

ROTARY PRINTING MACHINE

Filed May 20, 1936 4 Sheets-Sheet 4

Fig. 4

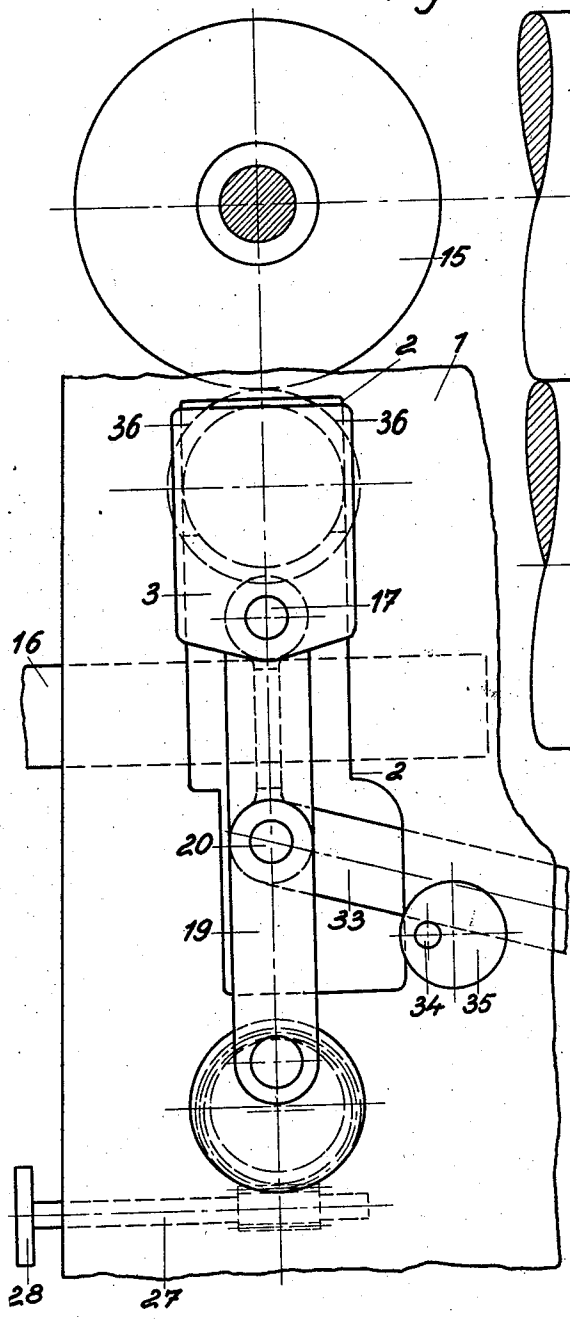

Fig. 5

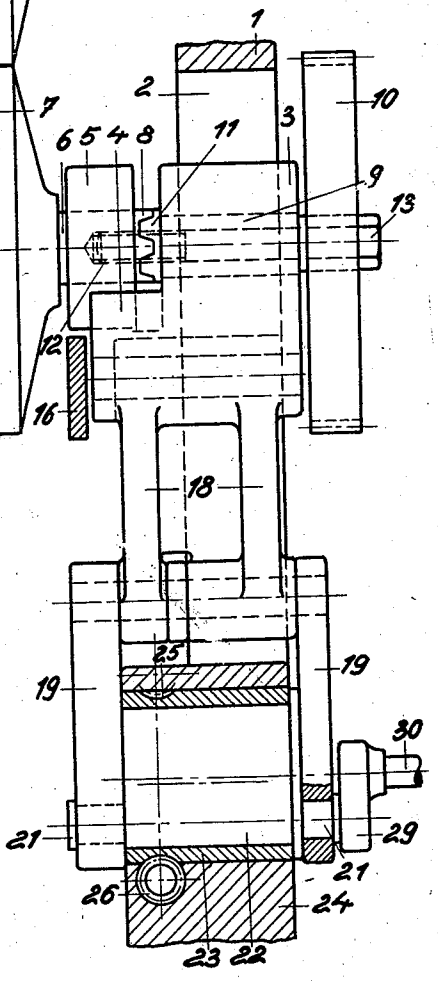

Inventor:
Karl Theodor Lang

Patented Feb. 14, 1939 2,146,963

UNITED STATES PATENT OFFICE

2,146,963

ROTARY PRINTING MACHINE

Karl Theodor Lang, Coswig-Dresden, Germany, assignor to Dresden-Leipziger Schnellpressen-Fabrik A. G., Coswig, Germany

Application May 20, 1936, Serial No. 80,775
In Germany May 22, 1935

8 Claims. (Cl. 101—247)

This invention relates to cylinder mountings in rotary printing machines.

In machines of this class it is often necessary to exchange the intaglio cylinder and to replace it by another intaglio cylinder having only half the diameter of the first. Furthermore, the arrangement of the cylinders must be such as to permit starting and stopping of impression and also fine adjustment thereof. The cylinder bearings must be displaced to the necessary extent without any difficulty. Various bearing constructions are known already which permit starting, stopping, fine adjustment of the impression, etc., but adjustment is always controlled by a separate gear with the result that these constructions are too complex and difficult to handle. Most of these constructions further require removal and reinsertion of the cylinder bearings.

The invention completely eliminates the drawbacks of the known constructions by providing in the machine frame guides for holding means which receive the cylinder bearings. These holding means are articulated to a suitable toggle for displacing the bearings, and means are further provided for influencing the toggle to permit starting and stopping and fine adjustment of the impression as well as the necessary displacement of the bearing holding means for removing the cylinders and exchanging them for cylinders having only one-half their diameter.

The means for starting and throwing off impression preferably comprise an adjusting mechanism acting on the fulcrum of the toggle and held in position by suitable means. The means for changing the holding means from holding cylinders of standard diameter to holding intaglio cylinders having only half this diameter, or vice versa, are formed of a crank which is adjustable to the extent of 180° and engaged by the free end of the toggle. Instead of the crank an eccentric gear may be provided. For fine adjustment of impression a fine adjusting mechanism cooperating with the toggle may be provided and constructed as eccentric gear.

By way of example, the invention is illustrated in the accompanying drawings, in which Figure 1 is a front view of the cylinder arrangement provided with the necessary adjusting means, parts of the machine frame being broken away; Fig. 2 is a similar view, but with the impression thrown off; Fig. 3 is a view similar to those shown in Figs. 1 and 2, and shows how the intaglio cylinder is rolled out; Fig. 4 shows how instead of a standard intaglio cylinder an intaglio cylinder having only half the diameter of the former is inserted; and Fig. 5 is a side view of Fig. 1, partly in section.

Referring to the drawings, in the side walls 1 of the machine frame bearing holding means 3 are displaceably disposed in a vertical guide 2. The holding means 3 extend with their portion 4 between the walls of the frame and thus form a support for the bearing members 5 attached to the ends 6 of the shaft of the intaglio cylinder 7. As indicated in Fig. 5, the shaft of the intaglio cylinder 7 is shorter than the clear width between the frame walls; on the face of the shaft end 6 coupling claws 8 are provided. In the holder 3 a hollow bushing 9 is rotatably disposed and carries outside the machine frame a gear 10. On the face of the bushing 9 facing the shaft end 6 coupling claws 11 are arranged which cooperate with the claws 8 of the shaft end 6. An adjusting screw 13 disposed in a threaded hole 12 of the member 6 effects connection of the claws 8, 11 and thereby of the intaglio cylinder 7 and drive 10.

Above the intaglio cylinder 7 a shaft 14, which is stationary in the example shown, carries the impression cylinder 15 which can be displaceable by means of a suitable adjusting gear for starting, stopping or fine adjustment of the impression.

Within the frame walls and slightly below the bearing members 5 rails 16 are provided to serve as path for rolling the intaglio cylinder 7 out of the machine.

A link pin 17 arranged in the lower part of the holder 3 is engaged by the adjusting gear comprising, in the embodiment shown, the levers 18 and 19 which are articulated to one another by the hinge bolt 20. The pairs of levers 18, 19 form with the appurtenant joints a toggle, the lower pair of levers 19 being supported by the crank pins 21 disposed on the faces of a roller-like member 22 which by means of an interposed eccentrically bored bushing 23 is positioned in an enlarged portion 24 of the frame walls 1.

The eccentric bushing 23 is fitted on its circumference with the worm wheel 25 which is engaged by a worm 26 arranged in the enlarged portion 24. The worm 26 is carried by a shaft 27 which can be turned by an adjusting wheel 28.

One of the crank pins 21 is firmly engaged by a crank 29 which in the center of the roller-like member 22 carries a rotary shaft 30. By means of an adjusting mechanism, not shown, the roller-like member 22 can be turned 180° when the shaft 30 is rotated. The adjusting

mechanism also secures the roller-like member 22 in position when the bushing 23 is turned.

Laterally of the enlarged portion 24 a pin 31 on the inside of the wall 1 carries an adjusting lever 32 which by means of a connecting rod 33 flexibly engages the link pin 20 of the toggle 18, 19. By means of a suitable mechanism the lever 32 is brought into the positions I, II, III, as indicated in Fig. 1. In the position I the toggle levers 18, 19 are extended and the intaglio cylinder 7 is lifted so as to hug the impression cylinder 15. Fine adjustment between the two cylinders 7 and 15 can be effected by displacing the toggle while in extended position by actuating the adjusting wheel 28, so that by means of the worm 26 and of the worm wheel 25 the eccentric bushing 23 is turned in the enlarged portion 24 and the roller-like member 22 on which the member 19 rests is raised or lowered. This adjustment is extremely accurate and sensitive.

When the impression is to be thrown off, the lever 32 must be brought into the position II, which involves inward bending of the toggle, so that the parts are in the position shown in Fig. 2. To secure the toggle in this position a reversible cam disc 35 is disposed on a level with the link pin 20 on a pin 34, which in the position according to Fig. 2 hugs with its high portion the toggle parts and secures them in position. The cylnders 7 and 15 are now moved apart to the extent of the distance *a*, i. e., impression is thrown off. To start impression again the lever 32 is brought in the position I.

To roll the intaglio cylinder 7 out of the machine the holders in the guides 2 must be drawn down still more. For this purpose the adjusting lever 32 must be placed in the position III according to Fig. 3. Previously, the cam disc 35 must be turned 180° to cause the toggle levers to rest on the lower portion of the disc 35. During depression of the holders 3 the engraving cylinder 7 is lowered to such an extent that the bearings 5 rest on the rails 16, as clearly indicated in Fig. 3. During further motion of the holders 3 the portions 4 thereof finally release the bearing members 5, and the intaglio cylinder can be rolled out of the machine on the path 16.

Instead of the cylinder 7 of standard or full diameter a cylinder 36 of half this diameter (Fig. 4) may be inserted. The cylinder 36 possesses similar bearing parts 5 and is rolled in on the path 16 between the walls 1. When the bearing members 5 are above the holders 3, 4, the latter are lifted. For this purpose the toggle is placed in extended position and, simultaneously, by actuation of the crank gear 29, 30, the roller-like member 22 in the eccentric bushing 23 is turned 180°, so as to occupy the position according to Fig. 4. The bearing holders 3 are thus upwardly displaced in the guides 2 to such an extent that the smaller cylinder 36 will be adjacent to the impression cylinder 15 in the same manner as formerly the larger cylinder 7. Fine adjustment as well as starting and stopping of impression is effected in the manner described.

I claim:—

1. Rotary printing machine, comprising a frame, rotary cylinders arranged in said frame, shafts and bearing holding means for starting and stopping impression and for rolling out the form cylinder, said means being formed as a toggle, means for effecting fine adjustment of impression and cooperating with said toggle, and means also cooperating with said toggle for initiating the exchange of standard cylinders for cylinders having only half the diameter thereof.

2. Rotary printing machine according to claim 1, wherein the means for effecting fine adjustment of impression and the means for initiating the exchange of standard cylinders for cylinders having only half the diameter thereof comprise an adjusting mechanism engaging the fulcrum of the toggle.

3. Rotary printing machine according to claim 1, wherein the means for effecting fine adjustment of impression and the means for initiating the exchange of standard cylinders for cylinders having only half the diameter thereof comprise an adjusting mechanism engaging the fulcrum of the toggle and means for fixing the adjusting mechanism in different operating positions.

4. Rotary printing machine according to claim 1, wherein the means for adjusting the holding means for exchanging standard cylinders for cylinders having half the diameter thereof comprise a roller-like member capable of being reversed 180° and crank pins disposed on said roller-like member and engaged by the free end of the toggle.

5. Rotary printing machine according to claim 1, wherein the means for adjusting impression comprise a fine adjusting mechanism cooperating with the toggle.

6. Rotary printing machine according to claim 1, wherein the means for adjusting impression comprise a fine adjusting mechanism constructed as a gear having an eccentric opening and cooperating with the toggle.

7. Rotary printing machine according to claim 1, wherein the means for adjusting impression comprise a fine adjusting mechanism engaging the lower free end of the toggle.

8. Rotary printing machine, comprising a frame provided with walls, an impression cylinder arranged in the frame, an intaglio cylinder, a shaft for the intaglio cylinder, said shaft being shorter than the clear width between the frame walls, bushings on the ends of said shaft, holding means for supporting the bushings, guides in the frame walls for said holding means, two toggle levers for flexibly engaging said holding means, a crank in the lower part of the frame, crank pins on the crank on which the ends of the toggle levers rest, an eccentric bushing surrounding the crank and being interposed between the bearing and the crank, an adjusting mechanism for the eccentric bushing, a toggle operating mechanism arranged on the frame walls and engaging the fulcrum of the toggle levers to cause inward bending of same to start and stop impression and, during further bending, to permit rolling out of the intaglio cylinder, said eccentric bushing causing fine adjustment of impression when turned while actuation of said crank effects adjustment of said holding means for the reception of standard or half-diameter cylinders.

KARL THEODOR LANG.