(No Model.)

A. BROWN.

ROLLING WINDOW SCREENS.

No. 285,006. Patented Sept. 18, 1883.

Fig. 1.

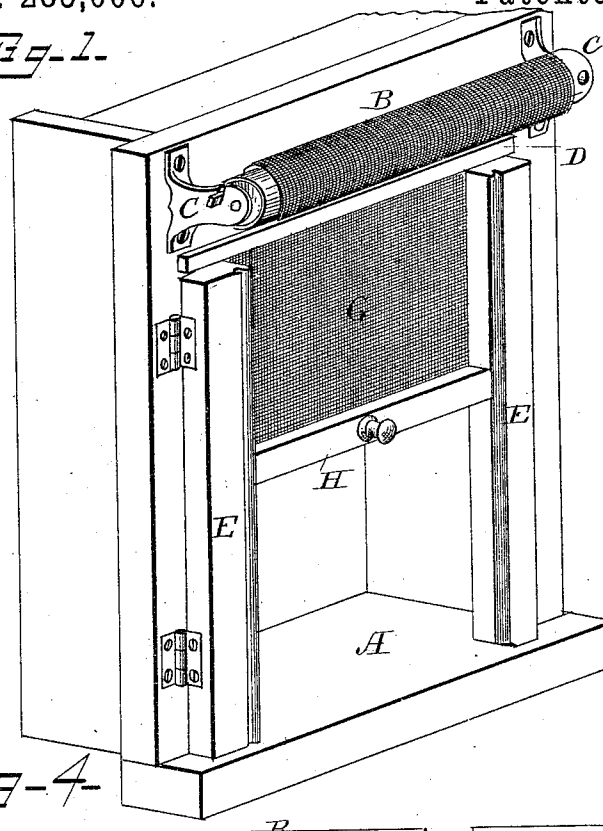

Fig. 2.

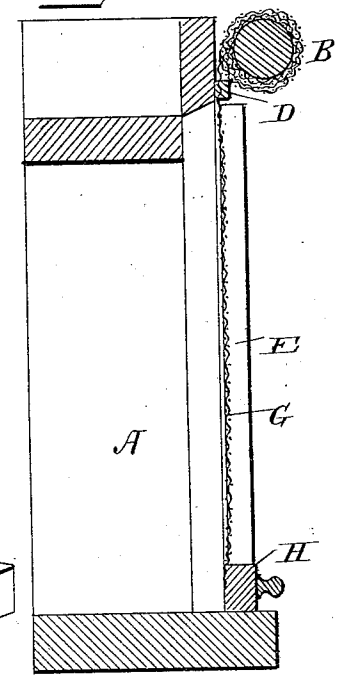

Fig. 3.

Fig. 4.

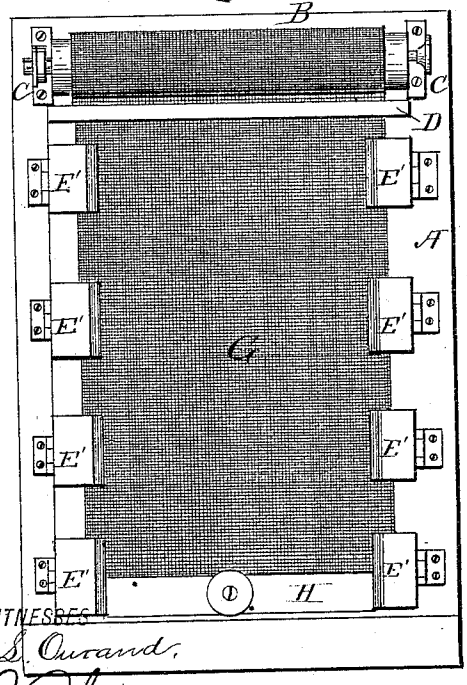

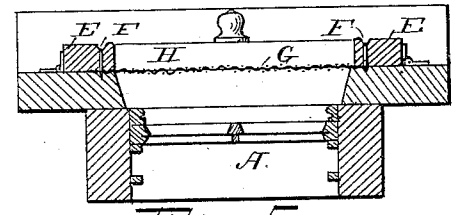

Fig. 5.

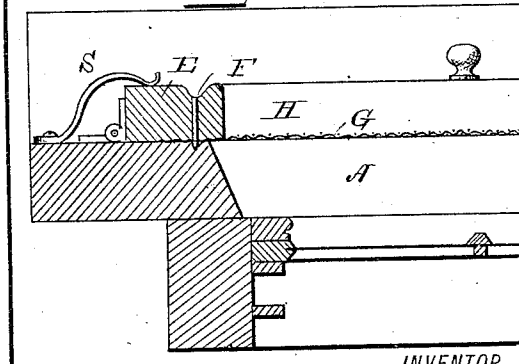

WITNESSES:

F. L. Ourand.

J. R. Little,

INVENTOR

A. Brown,

by A. Snow & Co.

Attorneys.

N. PETERS. Photo-Lithographer, Washington, D. C.

UNITED STATES PATENT OFFICE.

AINSWORTH BROWN, OF COLORADO SPRINGS, COLORADO.

ROLLING WINDOW-SCREEN.

SPECIFICATION forming part of Letters Patent No. 285,006, dated September 18, 1883.

Application filed July 16, 1883. (No model.)

To all whom it may concern:

Be it known that I, AINSWORTH BROWN, a citizen of the United States, residing at Colorado Springs, in the county of El Paso and State of Colorado, have invented a new and useful Rolling Window-Screen, of which the following is a specification, reference being had to the accompanying drawings.

This invention relates to rolling window screens and shades, and has for its object to provide a simple and inexpensive fixture, which will enable such screens and shades to be easily and conveniently adjusted and manipulated.

To this end the invention consists in the improved construction and arrangement of parts, which will be hereinafter fully described, and particularly pointed out in the claims.

In the drawings hereto annexed, Figure 1 is a perspective view of a window equipped with my improvement. Fig. 2 is a vertical sectional view of the same. Fig. 3 is a horizontal sectional view. Fig. 4 is a front view, showing a modification; and Fig. 5 is a horizontal sectional view illustrating another modification.

The same letters refer to the same parts in all the figures.

A in the drawings designates the window-frame, at the top of which an ordinary spring-roller, B, is journaled in brackets C C. Below the roller, and directly above the window-opening, is secured a guide-strip, D, between which and the window-frame the screen, shade, or other flexible material attached to the spring-roller passes. To the sides of the window-frame, adjoining the window-opening, are hinged vertical cleats E E, the inner sides of which are equipped with short projecting sharp points or barbs F. To the lower edge of the shade or screen attached to the roller, and which is denoted by letter G, is attached a slat, H, which is of such a length as to fit nicely between the cleats E E when the latter are closed. The edges of the shade or screen, however, project beyond the ends of the said slat.

The operation will be readily understood. When the cleats E are opened, the screen or shade may be readily raised or lowered to any desired point, at which it will be retained by the spring-roller mechanism, which is of ordinary construction. The cleats will then be closed upon the edges of the screen or shade, which are thus held securely against the wind, and so closely in contact with the window-frame as to prevent flies and other insects from entering. The last object, of course, is only fully accomplished when the slat H is drawn down into contact with the window-sill, or when the lower sash is closed and the slat H arranged to be in contact with its upper rail. I therefore prefer to arrange the parts in such a manner that this may be the case.

Sometimes, and especially when the invention is applied to shades, and not to rolling screens, it may be found desirable to substitute for the cleats E, running from top to bottom of the window-frame, short sections of hinged cleats, as shown at E, in Fig. 4, by which substantially the same object is attained. Again, the points or barbs upon the inner sides of the cleats may at times be found objectionable, in which case it is my purpose to provide springs S arranged to bear upon the cleats and hold them closed with sufficient pressure to retain the edges of the shade or screen; or these springs may be used in connection with the barbed cleats; or spring-hinges of any suitable construction may be used to connect the cleats to the window-frame. These and other modifications which will readily suggest themselves may be resorted to without departing from the spirit of my invention.

I claim as my invention and desire to secure by Letters Patent of the United States—

1. The combination of a window-frame, a spring-roller having a screen, shade, or the like, a guide-strip at the top of the window-opening, and cleats hinged to the sides of the window-frame and adapted to hold or bind the edges of the screen or shade against the sides of the window-frame, substantially as set forth.

2. The combination of the window-frame, the guide-strip, the spring-roller, the screen or shade attached to the latter, the barbed cleats hinged to the sides of the window-frame, and a slat attached to the lower edge of the screen or shade, and adapted to fit between the hinged cleats when the latter are closed, substantially as set forth.

3. The combination of the window-frame, the spring-roller, the screen or shade attached to the latter, the holding-strips hinged to the sides of the window-frame, and springs arranged and adapted to keep the said holding strips or cleats in a closed position, substantially as set forth.

In testimony that I claim the foregoing as my own I have hereto affixed my signature in presence of two witnesses.

AINSWORTH BROWN.

Witnesses:
H. M. GOOREY,
MATT. FRANCE.