Nov. 25, 1930. G. B. SHIPLEY ET AL 1,782,481

ANNEALING FURNACE

Filed Jan. 4, 1929 4 Sheets-Sheet 1

Fig. 1.

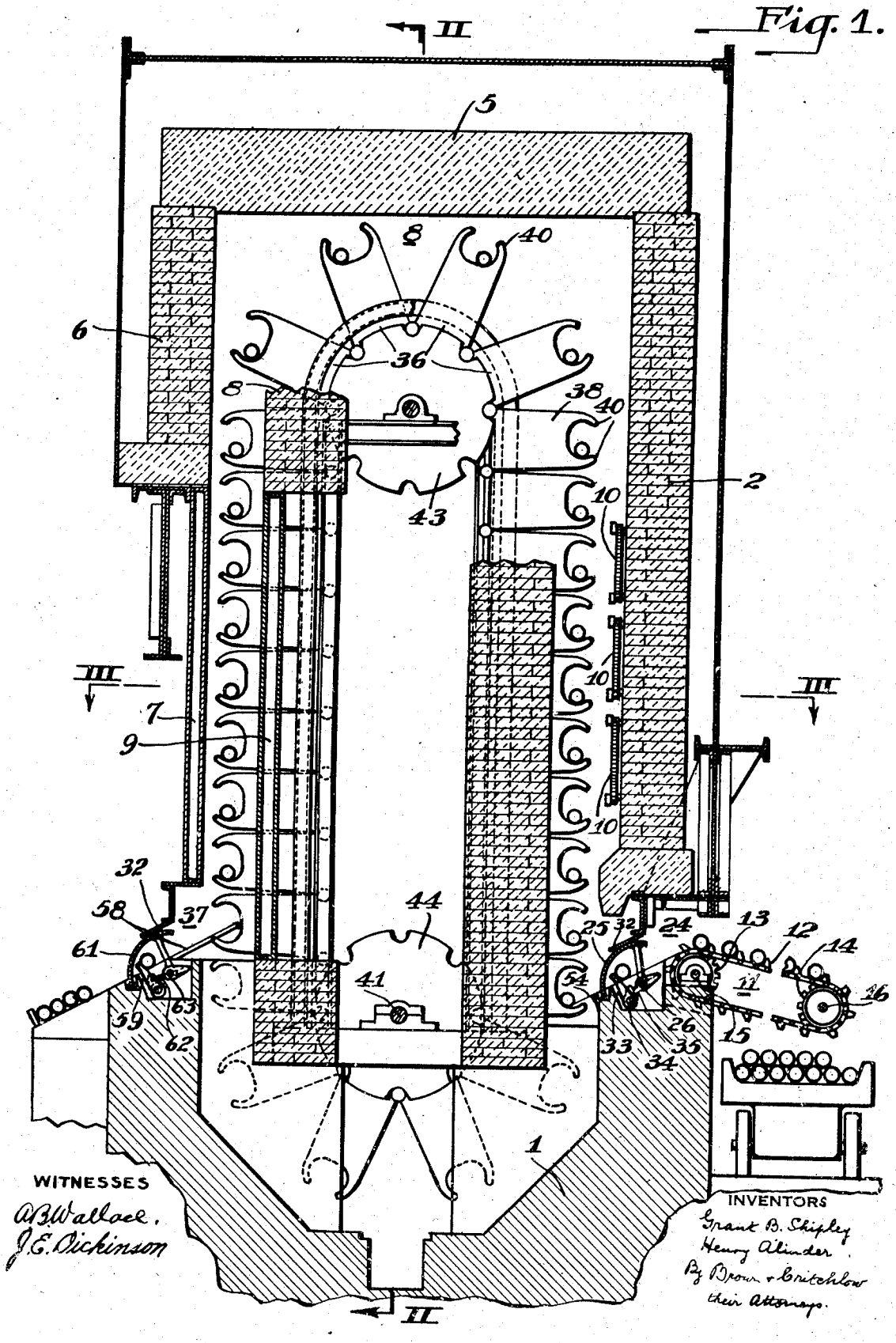

WITNESSES

A. B. Wallace.

J. E. Dickinson

INVENTORS

Grant B. Shipley

Henry Alinder

By Brown & Critchlow

their Attorneys.

Nov. 25, 1930. G. B. SHIPLEY ET AL 1,782,481

ANNEALING FURNACE

Filed Jan. 4, 1929 4 Sheets-Sheet 2

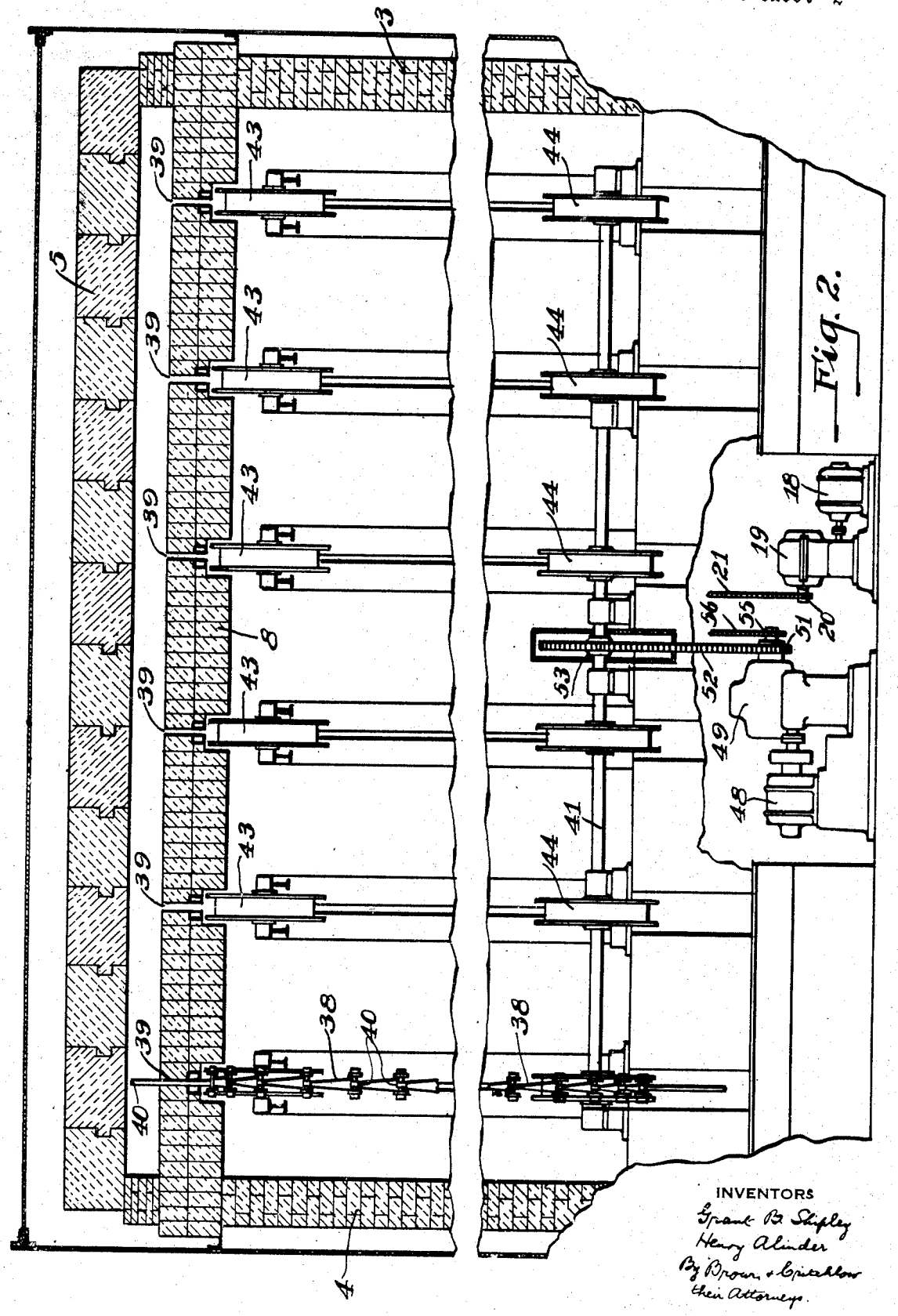

Fig. 2.

INVENTORS
Frank B. Shipley
Henry Alinder
By Brown & Critchlow
their Attorneys.

Nov. 25, 1930. G. B. SHIPLEY ET AL 1,782,481

ANNEALING FURNACE

Filed Jan. 4, 1929 4 Sheets-Sheet 3

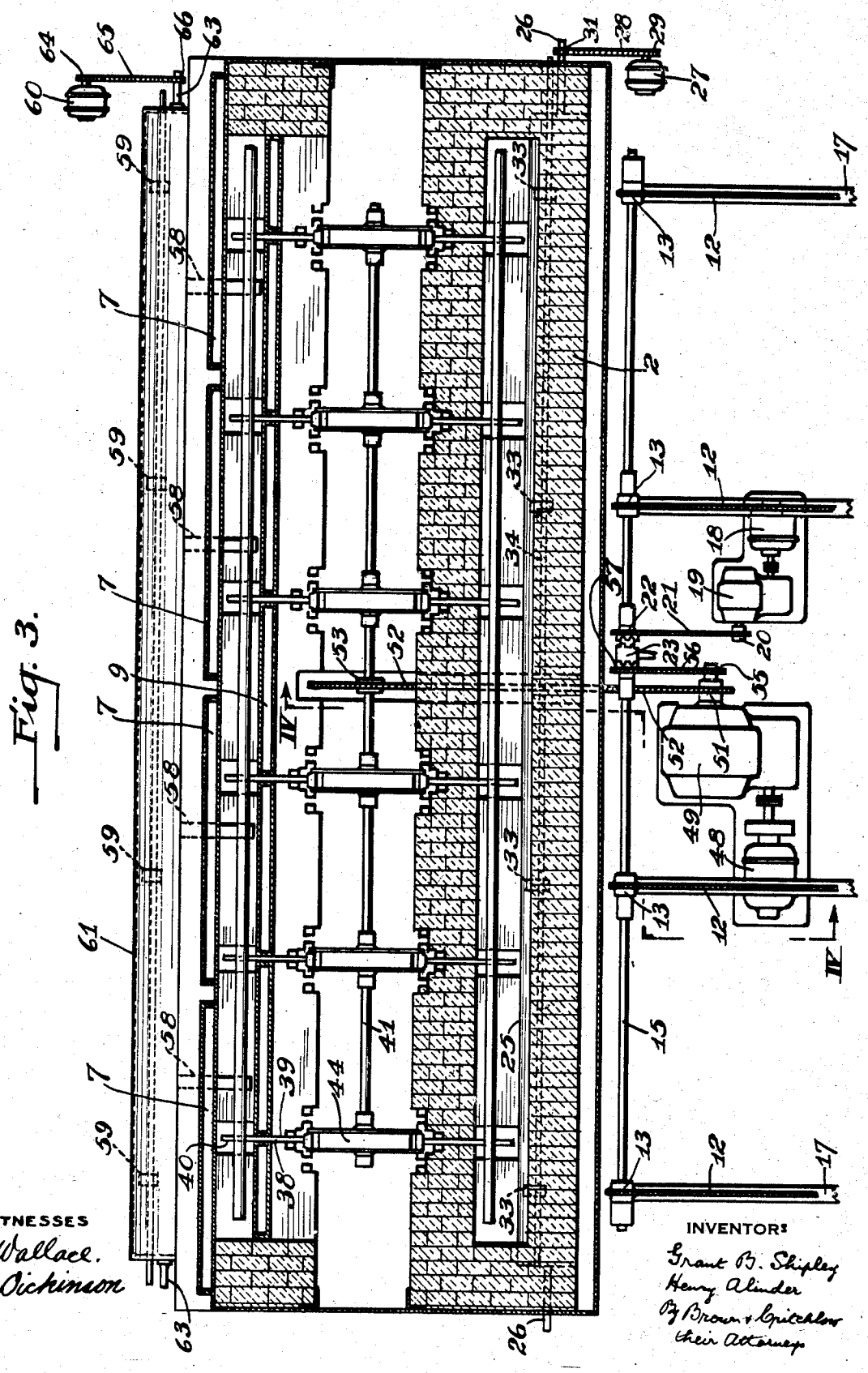

Fig. 3.

WITNESSES

A. B. Wallace.

J. E. Dickinson

INVENTORS

Grant B. Shipley

Henry Olinder

By Brown & Critchlow

their Attorneys

Nov. 25, 1930. G. B. SHIPLEY ET AL 1,782,481

ANNEALING FURNACE

Filed Jan. 4, 1929 4 Sheets-Sheet 4

Fig. 4.

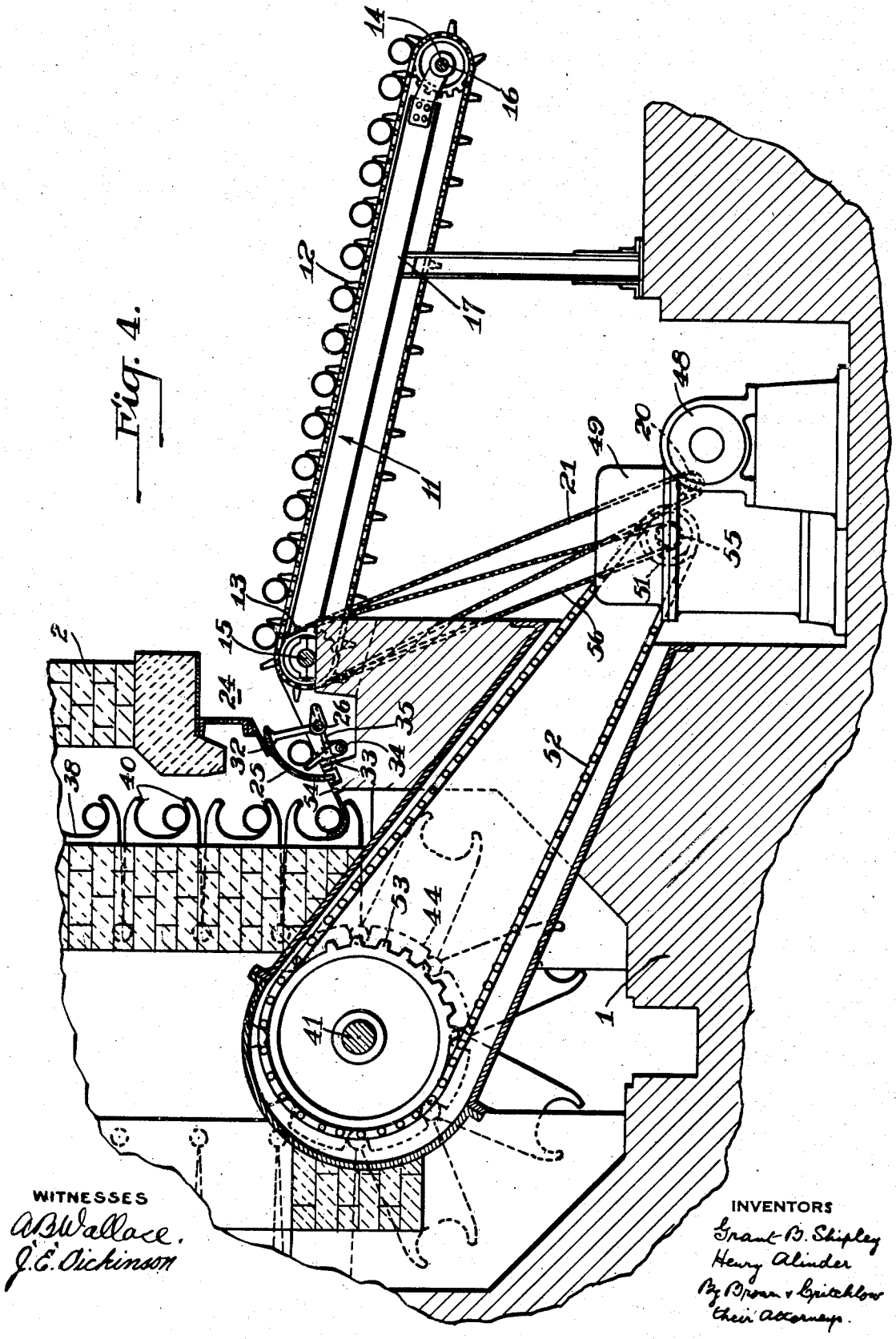

WITNESSES

A. B. Wallace.

J. E. Dickinson

INVENTORS

Grant B. Shipley

Henry Alinder

By Brown & Critchlow

Their Attorneys.

Patented Nov. 25, 1930

1,782,481

UNITED STATES PATENT OFFICE

GRANT B. SHIPLEY AND HENRY ALINDER, OF PITTSBURGH, PENNSYLVANIA, ASSIGNORS, BY MESNE ASSIGNMENTS, TO THE INTERNATIONAL NICKEL COMPANY, INC., OF NEW YORK, N. Y., A CORPORATION OF DELAWARE

ANNEALING FURNACE

Application filed January 4, 1929. Serial No. 330,173.

This invention relates to annealing furnaces, and especially to furnaces for annealing elongate metal stock such as tubes, rods, and the like.

The object of the invention generally stated is to provide a simple, compact and automatically operable furnace in which elongated stock such as metal tubes may be uniformly and rapidly annealed as they are progressively moved through the furnace.

The invention is described in conjunction with the accompanying drawings, which illustrate its preferred embodiment, and in which Fig. 1 is a transverse vertical sectional view of the furnace; Fig. 2 a vertical section taken longitudinally through the furnace on the line II—II of Fig. 1; Fig. 3 a horizontal sectional view on the line III—III of Fig. 1; and Fig. 4 a vertical section to enlarged scale taken transversely through a portion of the furnace along the broken line IV—IV, Fig. 3.

The annealing furnace provided according to the invention comprises a single upright chamber having a baffle extending longitudinally through its center, which divides the chamber into front and rear compartments. The front compartment is provided with heating means such as electrical heating units, and the rear compartment is provided with cooling means such as a water jacket through which water is circulated to rapidly absorb heat. Thus heating and cooling zones are provided in the furnace. Tubes or the like are fed laterally into the heating zone by an endless conveyor arranged along the front wall of the furnace, a longitudinal inlet opening being arranged in such wall adjacent the lower end of the heating compartment.

Inside the furnace, and supported in the baffle structure, there is another conveyor which receives the tubes as they enter the furnace and carries them upwardly through the heating compartment where they are heated, then over the baffle and downwardly through the cooling zone, where their heat is rapidly absorbed by the water in the water jackets which preferably form the walls of this compartment. At the bottom of the cooling compartment there is arranged a longitudinal opening through which the tubes are discharged from the furnace. The furnace is enclosed on all sides to prevent the heat and atmosphere in the annealing chamber from escaping, and the openings through which the tubes are fed into and discharged from the furnace are provided with doors adapted to be opened and closed whenever material is passed through them.

Referring now to the drawings, the furnace is illustrated as comprising a single elongated upright chamber structure supported upon a foundation 1 and having its front wall 2, end walls 3 and 4, top 5 and the upper portion 6 of its back wall constructed of heat insulating material such as fire brick, the lower portion of its rear wall being formed out of a plurality of water jackets 7. The furnace is divided into two compartments by means of an inverted U-shaped baffle structure 8 extending longitudinally of the furance and upwardly to near the top of the chamber. This baffle is constructed similar to the furnace walls, having its front wall and top constructed of fire brick or the like, and its back wall formed of a plurality of water jackets 9. In the front compartment of the furnace, and preferably attached to the front wall, are a number of electrical heating elements 10 employed to heat the tubes as as they are passed upwardly through the furnace. It will be understood however that any other suitable heating units may be employed for this purpose if desired. By placing a baffle structure 8 in the center of the chamber in the manner illustrated, and by providing heating elements in one of the compartments formed by the baffle and water jackets in the other, adequate heating and cooling zones are provided in the furnace.

In order to feed elongated blanks such as tubes laterally into the furnace a conveyor 11 is arranged adjacent its front wall 2. This conveyor may consist of a number of endless chains 12 extending around sprockets 13 and 14 (Figs. 1 and 4) secured to rotatable shafts 15 and 16, respectively, supported by a frame 17. For operating conveyor 11 independently of the rest of the furnace, an electric

motor 18 is coupled to a reduction unit 19. A sprocket wheel 20 is mounted on the drive shaft of this reduction unit and a chain 21 is passed around it and over a sprocket wheel 22 loosely mounted on conveyor shaft 15. A clutch coupling 23 is slidably mounted on shaft 15 which is adapted to be moved into engagement with sprocket wheel 22 and thereby effect the movement of the conveyor.

Along the front of the furnace at the point where tubes are discharged from conveyor 11, and on a level with the bottom of the heating zone, there is provided a charging opening 24 running full length of the furnace and through which tubes may be passed laterally into the furnace. To prevent the heat and gases in the furnace from escaping when tubes are not being inserted into the furnace, a door 25 of segmental cylinder form is provided for opening 24. On opposite ends of the door there are stub shafts 26 (Fig. 3) by means of which it is rotatably mounted in the furnace frame. To operate the door, a motor 27 at one end of the furnace has secured to its rotor a sprocket wheel 29 which engages a chain 28 passing around a sprocket wheel 31 mounted on stub shaft 26.

The upper curved surface of door 25 is sealed by means of a flexible apron 32 which effectively prevents gas leaking out around the door when it is closed, and to prevent the tubes jamming against the door as they drop off conveyor 11, latch arms 33 are provided. These arms are mounted on a shaft 34 supported in the furnace frame immediately in front of the door, and by means of connecting rods 35 are moved simultaneously with door 25, thus permitting the tubes to pass into the furnace when the door is opened and preventing them from jamming the door when it is closed.

On the inside of the furnace there is provided an endless conveyor 36 for carrying the tubes from the charging inlet upwardly through the heating zone, past the heating elements 10, over the top of baffle structure 8, downwardly through the cooling zone past water jackets 7 and 9 where their radiated heat is absorbed, and to an outlet or discharge opening 37 running longitudinally along the back of the furnace. This conveyor comprises a plurality of link belts 38 mounted in spaced relation along the length of baffle 8 and adapted to move in vertical openings 39 formed in the baffle structure. The links of these belts are provided with fingers 40, the outer ends of which have pairs of jaws forming pockets which extend outside of the baffle wall and in which the tubes are cradled as they are passed through the furnace. Suitably supported in the top of the baffle structure opposite each of its openings 39 is a sprocket wheel 43, and suitably supported in the bottom of the baffle structure there is provided a shaft 41 upon which a plurality of sprocket wheels 44 are mounted in alignment with sprocket wheels 43. About the superposed pairs of wheels 43 and 44 the belts 38 are mounted with the outer ends of its conveyor fingers extending outwardly through openings 39. To actuate conveyor 36, a motor 48 is coupled to a reduction unit 49, on the drive shaft of which there is secured a sprocket wheel 51 around which there extends a chain 52 which passes over a sprocket wheel 53 keyed to shaft 41. Hence when motor 48 is actuated the inner conveyor is moved upwardly through the heating and downwardly through the cooling zones of the furnace.

The fingers on each of the conveyor belts are arranged in alignment with those on every other belt, and by bringing conveyor 36 to rest with a row of fingers registering with lower surface 54 of charging opening 24, Figs. 1 and 4, door 25 may be raised and a tube passed into the furnace and rested in the pockets in the outer ends of the conveyor fingers. In charging the furnace each row of fingers is stopped in alignment with opening 24 and one or more tubes passed through door 25 into them.

To normally operate both conveyors 11 and 36 by means of motor 48, a second sprocket wheel 55 is arranged on the drive shaft of reduction unit 49, and from this sprocket wheel a chain 56 is passed around a sprocket wheel 57 loosely mounted on conveyor shaft 15 alongside clutch coupling 23. This sprocket wheel is adapted to be engaged by clutch coupling 23 in the same manner as is sprocket 22. Hence the feeding conveyor may be actuated by either motor 18 or motor 48. Motor 18 is employed primarily for actuating conveyor 11 independently of the rest of the furnace so that it may be loaded with tubes before the furnace is charged.

To discharge the tubes from the furnace after they have been passed through the heating and cooling zones, arms 58 are arranged in the lower portion of the cooling zone in such a way that they pick the tubes out of the pockets in the outer end of fingers 40 and cause them to slide into discharge opening 37 where they are engaged by latch arms 59 arranged in the opening to prevent the tubes jamming against door 61. When door 61 is opened, latch arms 59 are actuated by connecting rods 62 permitting the tubes to pass out of the furnace. Stub shafts 63 are provided at opposite ends of door 61, and by means of them door 61 is mounted in the furnace frame in the same manner as door 25. A motor 60 is arranged adjacent the end of the furnace for operating door 61. On the drive shaft of this motor there is mounted a sprocket wheel 64 around which a chain 65 is provided which extends around a sprocket wheel 66 mounted on stub shaft 63. Hence door 61 is opened and closed in the same

fashion as door 25 to discharge tubes from the furnace. To prevent a draft passing through the furnace when material is being entered into or taken out of it, doors 25 and 61 are arranged to open at different times and preferably in succession, door 61 being actuated by the closing of door 25.

In operating the furnace it is preferably charged with a suitable non-oxidizing atmosphere, and the heating elements heated until the proper temperature is attained. Feeding conveyor 11 is then set in motion by placing clutch coupling 23 in engagement with sprocket wheel 22 and starting motor 18. After the feeding conveyor has been loaded with tubes to a point where it discharges them into inlet opening 24, coupling clutch 23 is moved into engagement with sprocket wheel 57 and motor 48 is started. With the starting of motor 48, conveyors 36 and 11 are set in motion. When a row of fingers on conveyor 36 are in registration with the lower end of surface 54 forming the bottom of inlet opening 24, the motor is stopped. Door 25 is then actuated by motor 27 to admit one or more tubes to the furnace. Motor 48 is again started and the next row of fingers brought into alignment with the inlet opening 24. Conveyor 11 being operated simultaneously by the same motor as conveyor 36, tubing is deposited in the inlet opening as the preceding tubing is being raised and as the next row of fingers on conveyor 36 is being brought into alignment with the inlet opening. This operation of loading the inner conveyor is repeated each time a row of fingers registers with opening 24, and thus the tubes are progressively and continually passed through the furnace step-by-step. When the annealed tubes reach the lower portion of the cooling chamber they are raised out of the pockets in the ends of fingers 40 by means of arms 58 and carried to discharge openings 37 where they pass from the furnace by the opening of door 61, which takes place when motor 60 is set in motion.

In order to have motors 48, 27 and 60 automatically actuate the conveyors and doors in the manner set forth a suitable control system is provided. It is deemed unnecessary to illustrate and describe this control system since a number of different kinds of systems may be used and the construction of which requires nothing more than mechanical skill.

Among the features of this invention is the use of a single chambered annealing furnace for both gradually heating and cooling the material being annealed, and the automatically operable means provided for automatically effecting the movement of the material into and through the furnace.

According to the provisions of the patent statutes, we have explained the principle and mode of operation of our invention, and have illustrated and described what we now consider to represent its best embodiment. However, we desire to have it understood that, within the scope of the appended claims, the invention may be practiced otherwise than as specifically illustrated and described.

We claim:

1. A furnace for annealing elongate blanks, comprising front and rear walls provided respectively with horizontally disposed elongate inlet and discharge openings, a baffle forming with the front wall a vertical heating chamber and with the rear wall a vertical cooling chamber, means at the front wall of the furnace for charging blanks laterally through said inlet opening, an endless conveyor within the furnace for receiving the blanks and moving them first upwardly through the heating and then downwardly through the cooling chamber, and means for removing the blanks from said conveyor and directing them outwardly through said discharge opening.

2. A furnace for annealing elongate blanks, comprising front and rear walls provided respectively with horizontally disposed elongate inlet and discharge openings, doors for opening and closing said openings, a baffle forming with the front wall a vertical heating chamber and with the rear wall a vertical cooling chamber, a conveyor within the furnace for progressively moving blanks first upwardly through the heating and then downwardly through the cooling chamber, and means coordinated with the movement of said conveyor for operating said doors to permit blanks to enter the furnace through said inlet opening and to be discharged from the furnace through said outlet opening.

3. A furnace for annealing elongate blanks, comprising front and rear walls provided respectively with horizontally disposed elongate inlet and discharge openings, means for opening and closing said inlet and discharge openings, a baffle forming with the front wall a vertical heating and with the rear wall a vertical cooling chamber, a conveyor within the furnace for intermittently moving blanks first upwardly through the heating and then downwardly through the cooling chamber a conveyor arranged adjacent the inlet opening on the outside of the furnace for intermittently feeding blanks to the furnace, and coordinated means for intermittently actuating said conveyors.

4. A furnace for annealing elongate blanks, comprising front and rear walls provided respectively with horizontally disposed elongate inlet and discharge openings, a double walled baffle forming with the front wall a vertical heating and with the rear wall a vertical cooling chamber, a conveyor arranged within and having aligned fingers extending through said baffle, the outer ends of said fingers being provided with pockets for

receiving blanks charged laterally with the furnace through said inlet opening, and means for actuating said conveyor for moving blanks first upwardly through the heating and then downwardly through the cooling chamber.

5. A furnace for annealing elongate blanks, comprising front and rear walls provided respectively with horizontally disposed elongate inlet and discharge openings, an inverted U-shaped baffle forming with the front wall a vertical heating and with the rear wall a vertical cooling chamber, a conveyor arranged within and having aligned fingers extending through said baffle, the outer ends of said fingers being provided with pockets for receiving blanks charged laterally into the furnace through said inlet opening, means for actuating said conveyor for moving blanks first upwardly through the heating and then downwardly through the cooling chamber, and means adjacent to said discharge opening for removing blanks from said conveyor and directing them to the discharge opening.

6. A furnace for annealing elongate blanks, comprising front and rear walls provided respectively with horizontally disposed elongate inlet and discharge openings, a baffle forming with the front wall a vertical heating chamber and with the rear wall a vertical cooling chamber, and an endless conveyor within and provided with blank-engaging means extending through said baffle for progressively moving blanks first upwardly through the heating and then downwardly through the cooling chamber of the furnace.

7. A furnace for annealing metal, comprising front and rear walls provided respectively with inlet and discharge openings, a double-walled baffle forming with the front wall a vertical heating and with the rear wall a vertical cooling chamber and having vertical slots therein, a conveyor arranged within said baffle and provided with blank-engaging members extending through said slots therein, and means for actuating said conveyor for moving blanks first upwardly through the heating and then downwardly through the cooling chamber of the furnace.

8. A furnace for annealing metal, comprising front and rear walls provided respectively with inlet and outlet openings, a double-walled baffle having a refractory section forming with the front wall of the furnace a vertical heating chamber and having a water-cooled section forming with the rear wall of the furnace a vertical cooling chamber, a conveyor arranged within and having blank-engaging members extending through said baffle walls, and means for actuating said conveyor for moving blanks first upwardly through the heating and then downwardly through the cooling chamber of the furnace.

In testimony whereof, we hereunto sign our names.

GRANT B. SHIPLEY.
HENRY ALINDER.