Feb. 2, 1965 F. J. MARSEE ET AL 3,168,599

CARBURETOR MAIN FUEL NOZZLE

Filed July 16, 1962

FIG. 1

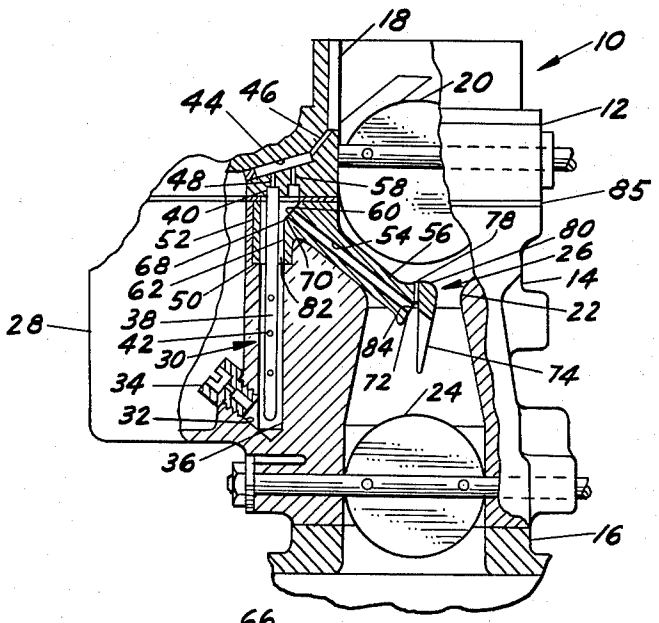

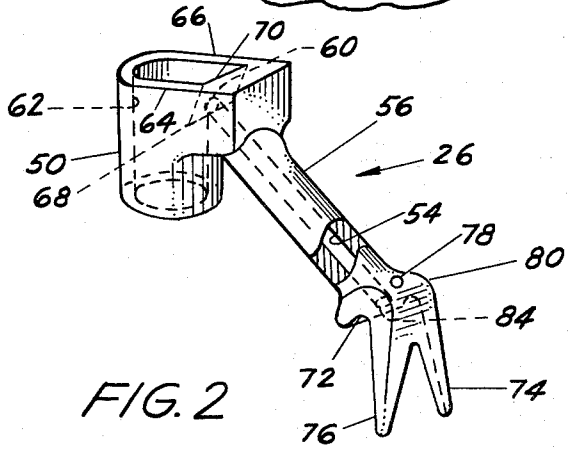

FIG. 2

FREDERICK J. MARSEE
NEIL M. ROMEO
JOHN DIRDA
INVENTORS

BY Walter Patorako, Jr.
ATTORNEY

United States Patent Office 3,168,599 Patented Feb. 2, 1965

3,168,599

CARBURETOR MAIN FUEL NOZZLE

Frederick J. Marsee, Hazel Park, Neil M. Romeo, St. Clair Shores, and John Dirda, Detroit, Mich., assignors to Holley Carburetor Company, Warren, Mich., a corporation of Michigan

Filed July 16, 1962, Ser. No. 209,823
3 Claims. (Cl. 261—65)

This invention relates generally to carburetors for internal combustion engines, and more specifically to a novel carburetor and main nozzle construction.

Each carburetor design and application presents its own peculiar problems of proper distribution of fuel and air mixture to the engine, and it has been found that variations in main nozzle design may substantially effect distribution. Also, each carburetor design presents peculiar problems in the manner in which the main nozzle must be formed or assembled in the carburetor.

A main object of this invention is to provide a nozzle design which is capable of thoroughly mixing and dispersing the fuel and air mixture, in order that proper distribution to the engine will be attained.

A specific object of the invention is to provide a novel nozzle and carburetor structure in which the nozzle is easily manufactured and adaptable to be inserted into the main well chamber of the carburetor.

Other objects and advantages of the invention will become apparent when reference is made to the accompanying illustrations wherein:

FIGURE 1 is an elevational view, with portions thereof broken away and in cross section, illustrating a carburetor embodying the invention and mounted on an intake manifold.

FIGURE 2 is an enlarged perspective view of a nozzle embodying the invention.

Referring to the drawings in greater detail, FIGURE 1 illustrates generally a carburetor **10**, which may comprise upper and lower portions **12** and **14**, mounted on an engine intake manifold **16**. The carburetor **10** comprises an induction passage **18** having the usual choke plate **20**, venturi **22** and throttle plate **24** therein, as well as the novel main fuel nozzle **26**. The fuel reservoir **28** is generally formed as an integral part of the carburetor **10**, and it has associated therewith a main metering system **30**. A conduit **32** containing a main metering jet **34** communicates between the fuel reservoir **28** and the main well **36** of the main fuel metering system **30**.

A main well tube **38** is pressed into the upper body **12** of the carburetor **10**, as at **40**, so as to be suspended in the main well **36** when the portions **12** and **14** are assembled. The main well tube **38** contains a plurality of bleed passages **42** so as to communicate the inside of the tube with the main well chamber **36**. A conduit **44** and a restriction **46** communicate between the open top **48** of the main well tube **38** and the induction passage **18**.

The novel main fuel nozzle **26** is associated and cooperates with the carburetor main metering system **30** by virtue of having its tubular inlet end **50** press fitted into a bore **52** in the lower body **14** of the carburetor **10**, so as to surround the main well tube **38**. That is, the tubular end **50** forms a portion of the main well **36**. A discharge passage **54** through the stem **56** of the main nozzle **26** communicates between the main well **36** and the induction passage **18**. An anti-siphon air bleed **58** communicates between the inlet end **60** of the discharge passage **54** and the conduit **44** leading to the induction passage **18**.

As is better illustrated in FIGURE 2, the novel main nozzle **26**, which may comprise a one piece casting, is formed so as to include a cylindrical end **50** adapted to be press fitted into a counter-bored upper end **52** of the main fuel well **36** so as to form, with its inside wall **62** a continuation of the main well chamber **36**. The upper portion of the cylindrical end **50** is extended tangentially from two sides **64** and **66** thereof, so as to enable formation of a point of intersection **68** between the uppermost end of the main well chamber **36** and the passage **54** extending axially through the downwardly sloping stem **56**, the latter entering the induction passage **18** in the vicinity of the venturi **22**. The surface **70** at the inlet end **60** is perpendicular to the axis of the stem **56**. At the discharge end **72** of the stem **56** there is formed a pair of diverging prongs **74** and **76** having a separating fillet therebetween substantially equal to the diameter of the passage **54**. A vertical passage **78** is formed through the center of a rounded protuberance **80** which connects the discharge end **72** of the stem **56** to the separated prongs **74** and **76**.

Operation

When the engine is operating, fuel already partially mixed with air is drawn in the well known manner into the main well **36**, into the clearance **82** between the cylindrical end **50** of the nozzle **26** and the main well tube **38** and thence through the passage **54** and outlet **84** into the induction passage **18**. As the fuel is discharged through the outlet **84**, it is intercepted by a downward flow of air through the centrally located passage **78**. A portion of the resulting fuel-air mixture is then deflected upon impact with the two prongs **74** and **76**, while another portion of the mixture passes between the prongs. The various portions of the fuel-air mixture are thus distributed in a controlled manner by and through the prongs **74** and **76**, depending upon the preselected attitude and shape of the prongs.

Actual tests have proven that a fuel-air mixture dispersed in this manner upon being discharged into the air stream through the induction passage **18** has resulted in an ideal distribution to the cylinders of the engine.

It is also apparent that this nozzle construction, in addition to providing ideal distribution of fuel, provides a very convenient method of assembling a separately formed nozzle into the carburetor. The tubular end **50** of the nozzle is merely inserted into the bore **52** in the lower portion **14** of the carburetor, and the gasket **85** and upper portion **12** of the carburetor are then assembled on the lower portion **14** so as to retain the nozzle **26**.

Although but one embodiment of the invention has been shown and described, it is apparent that other modifications thereof may be made without exceeding the scope of the appended claims.

What we claim as our invention is:

1. Carburetor, comprising assembled upper and lower body portions; a main fuel metering system including a main well chamber and a main well tube, an induction passage having a venturi and throttle plate therein, and a main fuel nozzle having a hollow mounting portion inserted in and forming a part of said main well chamber, a stem extending from a point adjacent the top of said main well chamber to substantially the center of said venturi, a plurality of downwardly extending protrusions, a bridge-like portion formed between the tops of said protrusions and the end of said stem positioned in said induction passage, and a vertical passage formed through said bridge-like portion.

2. In a carburetor having upper and lower body portions, a main fuel metering system including a main well chamber and a main well tube, and an induction passage having a venturi and throttle plate therein, a main fuel nozzle, said nozzle comprising a cylindrical portion for insertion in said main well as a part of the wall of said main well, a downwardly sloping stem extending from said cylindrical portion and into said induction passage, an

axial passageway through said stem, a pair of legs opposite the outlet end of said stem and connected to the top of said outlet end by a bridge-like portion, and a passage through said bridge-like portion.

3. In a carburetor having assembled upper and lower body portions, a main fuel metering system including a main well chamber and a main well tube, and an induction passage having a venturi and throttle plate therein, a main fuel nozzle, said nozzle comprising a tubular portion inserted into said main well with the top surface thereof level with the top surface of said lower body and the inside surface thereof forming a vertical extension of said main well chamber, an integral portion extending from substantially the upper half of said tubular portion and toward said induction passage, a stem extending from said integral portion in a downwardly sloping attitude into said induction passage and terminating at a point substantially at the center of said venturi, a passageway extending radially through the length of said stem, a protuberance extending from the end of said stem and having a pair of vertical legs extending downwardly therefrom toward said throttle plate with the top of the opening between said pair of vertical legs being substantially level with the axis of said passageway, and a vertical opening formed through said protuberance.

References Cited in the file of this patent

UNITED STATES PATENTS

2,615,695	Winkler	Oct. 28, 1952
2,986,378	Moseley	May 30, 1961
3,076,639	Szwargulski et al.	Feb. 5, 1963
3,081,986	Egerer	Mar. 19, 1963
3,089,634	Smith	May 14, 1963

FOREIGN PATENTS

602,404	France	Dec. 23, 1925
881,461	Great Britain	Nov. 1, 1961