July 1, 1941. K. D. McMAHAN 2,247,817

CENTRIFUGAL PUMP

Filed April 30, 1938 2 Sheets-Sheet 1

Fig. 2.

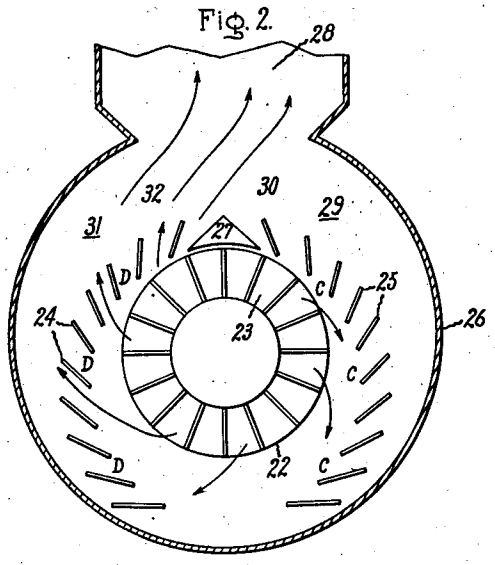

Fig. 1.

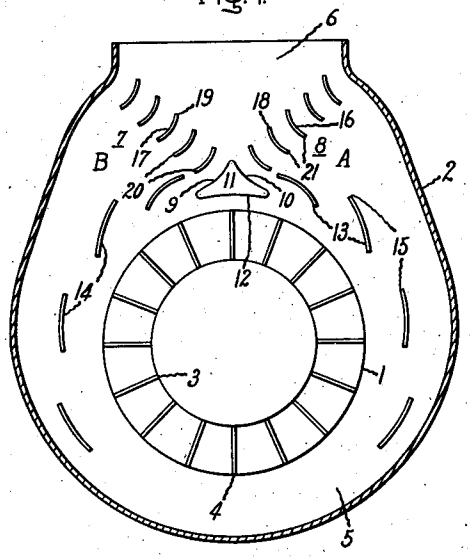

Inventor:
Kenton D. McMahan,
by Harry E. Dunham
His Attorney.

July 1, 1941. K. D. McMAHAN 2,247,817

CENTRIFUGAL PUMP

Filed April 30, 1938 2 Sheets-Sheet 2

Fig. 3.

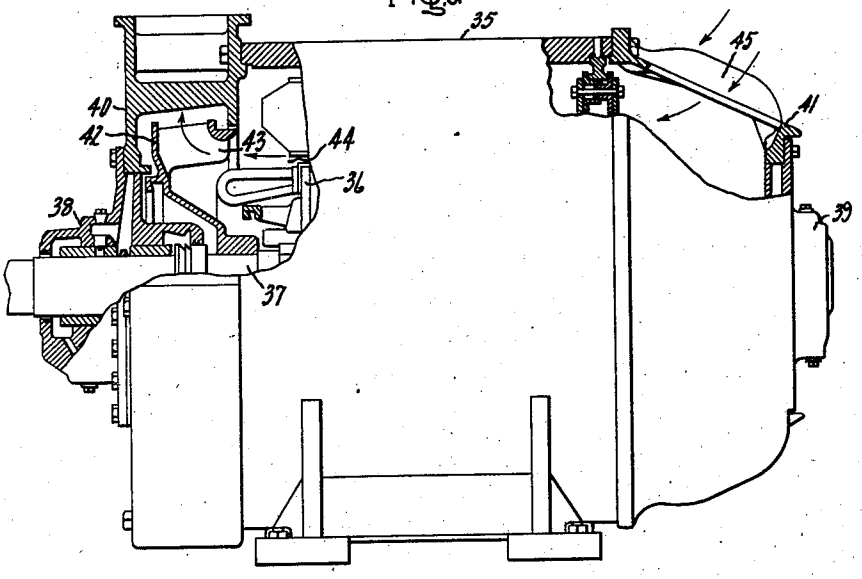

Fig. 4.

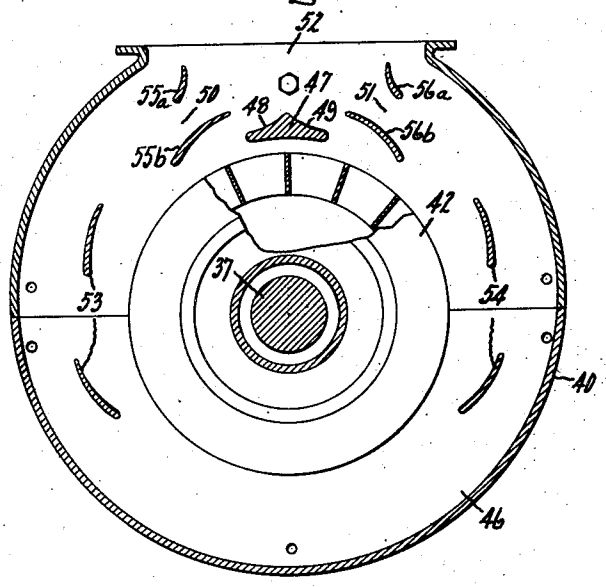

Inventor:
Kenton D. McMahan,
by Harry E. Dunham
His Attorney.

Patented July 1, 1941 2,247,817

UNITED STATES PATENT OFFICE

2,247,817

CENTRIFUGAL PUMP

Kenton D. McMahan, Schenectady, N. Y., assignor to General Electric Company, a corporation of New York

Application April 30, 1938, Serial No. 205,297

15 Claims. (Cl. 103—87)

This application is a continuation in part of my application, Serial No. 159,137, filed August 14, 1937.

The present invention relates to reversible centrifugal pumps or fans. Centrifugal pumps or fans ordinarily cannot be efficiently operated in both directions. If designed for rotation in one direction, the efficiency and output is very low when operated in the reverse direction.

The object of my invention is to provide an improved construction and arrangement in centrifugal pumps or fans providing efficient operation in both directions. For a consideration of what I believe to be novel and my invention, attention is directed to the following description and the claims appended thereto.

In the accompanying drawings, Figure 1 is a sectional end elevation of a centrifugal fan embodying my invention, Figure 2 is a sectional end elevation of a modification; Fig. 3 is a side elevation, partly broken away, of a reversible electric motor equipped with a fan embodying my invention; and Fig. 4 is a sectional end elevation of the fan.

Referring to the drawings, there is shown a centrifugal fan or blower having a radial bladed impeller 1 mounted within an outer casing 2. The inner edges 3 of the blades define an axially extending inlet opening which is in alignment with an inlet opening in the outer casing, not shown. The impeller is rotated by suitable driving means, not shown. During rotation of the impeller, air is drawn through the inlet to the inner edges of the impeller blades and is discharged radially between the outer edges 4 of the blades to a passage 5 between the periphery of the blades and the casing walls. The air discharged from the impeller, in addition to an outward radial motion, has a rotational or swirling motion in the direction of rotation of the impeller. The peripheral passage 5 communicates at both sides with a discharge conduit 6 by means of passages 7 and 8. From one aspect, the passages 7 and 8 can be considered as forked passages extending from the discharge conduit to the passage 5, one of the passages being in front of the discharge conduit as regards the direction of rotation of the impeller and the other passage being beyond the discharge conduit. The outer walls of the passages 7 and 8 are defined by the casing walls. The inner walls of the passages 7 and 8 are respectively defined by the inclined surfaces 9 and 10 of a cutoff 11. The cutoff has an inner surface 12 presented to the periphery of the impeller which serves as a dam preventing circulation of the air discharged from the impeller blades. The inclined surfaces 9 and 10 respectively direct the air through the passages 7 and 8 during clockwise and counterclockwise direction of the impeller. The casing is symmetrical about a center line passing through the center of the discharge conduit. The area of the peripheral passage 5 is a maximum adjacent the forked passages 7 and 8 and decreases gradually to a minimum at a point midway between these passages at the point opposite cutoff 11.

Symmetrically arranged in opposite sides of the peripheral passage 5 are oppositely inclined sets of vanes or baffles 13 and 14. The baffles 13 and 14 cooperate with the air discharged from the impeller to provide a scroll-like passage around the fan which increases in effective area from the cutoff around the impeller in its direction of rotation to the discharge outlet. When the impeller is rotating in a clockwise direction, as viewed in Figure 1, the inner edges of the vanes 13 define a scroll-like passage from the cutoff to a point half way to the discharge outlet. Due to the inclination, the passages between the vanes 13 face opposite the direction of rotation of the impeller, or in other words opposite to the rotational or swirling motion of the air discharged from the impeller. These passages will, therefore, be subject to an injector action which will tend to draw air from the space beyond the outer edges 15 of the vanes into the air stream rotating past the inner edges of the vanes. This injector action is balanced in a manner hereafter described. It is, therefore, apparent that the inner edges of the vanes 13 will substantially restrict the air to the scroll-like passage defined by the inner edges of the vanes. The vanes 14, on the other hand, are so inclined as to provide passages therebetween facing the direction of rotation of the impeller. The air discharged from the impeller will therefore tend to flow between these passages. The vanes 14 will have very little effect on the air discharged from the impeller and substantially the whole area of the passage 5 in the vicinity of the vanes 14 is available for receiving the air discharged from the impeller. The combined effect of the vanes 13 and 14 therefore produces a scroll shaped passage around the impeller which increases in effective area from the cutoff around the impeller in its direction of rotation to the discharge conduit.

Since the vanes 14 and 13 are symmetrically arranged within the casing, it is obvious that during rotation of the impeller in a counterclockwise direction, as viewed in Fig. 1, the vanes 13 and

14 will have the reverse functions; that is, the vanes 14 will restrict the effective area of the passage 5 and the vanes 13 will offer substantially no restriction.

In the passages 7 and 8 are arranged oppositely inclined sets of vanes 17 and 16. The outer edges 18 and 19 of the vanes are arranged respectively along a continuation of the inclined surfaces 9 and 10 of the cutoff. During clockwise rotation of the impeller, the passages between the inner edges 20 of the vanes 17 face in the direction of rotation of the impeller. These passages therefore assist the surface 9 of the cutoff in directing a stream of air through the passage 7 to the discharge conduit 6. During this direction of rotation the stream of air flowing through the discharge conduit flows transversely across the outer edges 18 of the vanes 16. The passages between the vanes 16 are therefore subjected to an injector action tending to draw air from the space A within the inner edges 21 of the vanes 16. The vanes 16 are so shaped that this injector action substantially balances the injector action to which the passages between the vanes 13 are subject. The net result is that there is substantially no air flow in the space between the inner edges of the vanes 13 and the outer edges of the vanes.

It has been found that during clockwise rotation of the impeller the operation is substantially unchanged if the passages between the vanes 16 are physically blocked, for example by walls closing the spaces between the outer edges of the vanes. This shows that it is possible to obtain a practically perfect balance of the injector actions to which the vanes 13 and 16 are subject. In effect, the passage 8 is blocked by the action of the stream of air flowing through the passage 7 to the discharge conduit.

During clockwise rotation, the functions of the vanes 16 and 17 are reversed. The vanes 16 assist the surface 10 of the cutoff in directing a stream of air to the discharge conduit. The vanes 17 are subject to an injector action due to the discharge of the air flowing across the outer edges 19 thereof which balances the injector action to which the vanes 14 are subject.

The construction described above has the same efficiency in both directions of operation. This efficiency is substantially equal to the efficiency obtainable with a scroll casing designed specially for one direction of rotation.

The cutoff and the vanes all contribute to the efficiency of operation. If the vanes 13, 14, 16 and 17 were omitted, the efficiency would tend to be less than that obtained with the vanes. During clockwise rotation of the impeller, as viewed in Fig. 1, without the vanes, the inclined face 9 of the cutoff will direct air from in front of the cutoff, as regards the direction of rotation of the impeller, through the passage 7 to the discharge conduit. The stream of air so directed will flow transversely across the passage 8 and will produce an injector action therein which will substantially balance the injector action produced by the impeller blades beyond the cutoff, as regards the rotation of the impeller. Without the help of the vanes 13 and 16, it is difficult to obtain a balance of the injector action under all load conditions and there may be some recirculation of the discharge fluid through the passage 8 to the passage 5. Where efficiency of operation through a wide range of load conditions is not of great importance, this construction will provide satisfactory operating characteristics. During counterclockwise rotation of the impeller, the face 10 of the cutoff directs the air to the discharge conduit and the air stream so directed produces an injector action in the passage 7 which decreases the recirculation of the discharge fluid through the passage 7.

In the construction which uses the cutoff 11 without any of the vanes, there will be a considerable eddying and some recirculation of the discharge fluid in the region A during clockwise rotation of the impeller and in the region B during counterclockwise rotation of the impeller. This will decrease the efficiency. The vanes 13 and 14 are primarily effective in reducing the eddying in the regions A and B. During clockwise rotation of the impeller the vanes 13 oppose the outward movement of the air discharged from the impeller in the region A beyond the cutoff as regards the direction of rotation of the impeller. The net result is that in this region the passage in the casing around the fan has an effective area which increases from beyond the cutoff around the fan in the direction of rotation. The effective area of the passage corresponds very closely to the area of a specially designed scroll casing. During counterclockwise rotation of the impeller the vanes 14 function in the same manner as the vanes 13. The vanes 16 and 17 are designed to produce an injector action in the regions A and B decreasing the eddying and recirculation in these regions. The vanes 16 are effective for this purpose during clockwise rotation of the impeller and the vanes 17 during counterclockwise rotation of the impeller. The shape of the vanes 16 and 17 is such as to offer a minimum obstruction to the flow of discharge fluid therebetween.

I have shown a plurality of vanes 13, 14, 16 and 17. I have found that in many cases only a single vane is necessary in each group. The greater number of vanes illustrated merely produces an improvement in efficiency of operation.

In the reversible fan or blower shown in Fig. 2, the rotor or impeller 22 of the blower is shown as of the radial vane type and is driven by a reversible motor, not shown. In case a greater capacity in one direction of rotation than in the other is desired, the rotor blades may be inclined accordingly. The rotor has an axial air inlet 23. A series of overlapping spirally disposed vanes or baffles 24 and 25, similar for vanes 13 and 14, are fixedly located on each side of the rotor to form in conjunction with the enclosing casing 26 a reversed scroll for rotation of the rotor in opposite directions. A double cutoff element 27, similar to the cutoff 11 in Fig. 1, is located adjacent the periphery of the rotor opposite the outlet or discharge conduit 28 of the casing. The outlet may be connected to ventilate the motor driving the rotor or for any other desired purpose.

In operation when the rotor 22 is driven in the clockwise direction, air is drawn into the axial inlet opening 23 and is projected radially outwardly through the rotor with a clockwise swirl as indicated by the arrows. The air impinges upon the series of blades or baffles 25 which act jointly as a substantially impervious scroll wall inside of the casing in the region beyond the cutoff as regards the direction of rotation of the impeller. Due to the relative inclination and spacing of the vanes with relation to the direction of air flow an injector action is set up at points C between the vanes tending to draw air from the passage 29 between the outer edges of

the series of blades 25 and the right-hand side of casing 26. However, this injector action is balanced by an opposing injector action as will be explained hereinafter so that no flow occurs through the vanes.

The series of blades or baffles 24 are so spaced and related that the clockwise whirl of air produced by the rotor readily passes therethrough with a minimum of resistance to the flow. The clockwise stream of air is then projected between the cutoff 27 and the left-hand edge of the outlet opening 28 at relatively high velocity. This high velocity stream of air sets up an injector action effective at the point or region 30 to balance or neutralize the sum of the injector actions set up at points C between the vanes or baffles 25, thereby preventing any recirculation of the clockwise swirl of air through the blower. This materially increases the efficiency of operation of the blower.

Upon operation of the rotor in the counterclockwise direction, the series of vanes or baffles 24 serve jointly as an impervious wall to restrain the counterclockwise whirl of air projected from the rotor while the series of blades or baffles 25 permit ready flow of the counterclockwise whirl of air therethrough. The rapidly moving counterclockwise stream of air sets up an injector action at the points D adjacent the inner edges of the series of vanes or baffles 24 tending to draw air from the passage 31 between the outer edges of the vanes or baffles 24 and the left-hand side of the casing. However, the main counterclockwise stream of air readily passes through the series of vanes 25 and is projected between the cutoff element 27 and the right-hand edge of the outlet 28 thereby setting up an opposing injector action at the point 32 which prevents any flow of air due to the injector action at the points D. This prevents recirculation of the counterclockwise stream of air inside the casing.

In Figures 3 and 4 a reversible fan or blower is shown used as a ventilating fan for an electric motor which comprises a stationary element 35 and a rotating element 36 carried on a shaft 37 journaled in bearing housings 38 and 39. The bearing housings are fixed, respectively, to end bells or end frame members 40 and 41. As shown in Fig. 4, the end frame 40 is split into upper and lower parts which are suitably secured together. Fixed on the shaft 37 is a centrifugal fan or impeller 42 having an inlet 43 adjacent the air gap 44 between the rotating and stationary members of the electric motor. During rotation, the fan draws air through inlet openings 45 in the end frame member 41 and through the air gap 44. The direction of air flow is indicated by the arrows. The air is discharged from the outer edges of the blades to a passage 46 which surrounds the periphery of the fan. The passage 46 is provided by walls integral with the end frame member 40. Integral with the end frame member 40 is a cutoff 47 of a construction similar to the cutoffs 11 and 27 in the previously described constructions. The cutoff has oppositely inclined faces 48 and 49 which define passages 50 and 51 connecting the passage 46 with a discharge outlet 52 likewise formed by walls of the end frame 40. Integral with the end frame 40 are sets 53 and 54 of oppositely inclined vanes located in the passage 46 and oppositely inclined vanes 55*a* and 55*b* and 56*a* and 56*b* located, respectively, in the passages 50 and 51. These vanes perform the functions of the vanes 13, 14, 16 and 17 in the construction of Fig. 1.

When the fan 42 is rotated in a clockwise direction, as viewed in Figure 4, the air discharged from the fan to the passage 46 has a clockwise swirling motion. Due to the inclination of the vanes 54, the air will be substantially confined to the space between the inner edges of the vanes 54 and the periphery of the fan. The passages between the vanes will be subject to an injector action which is balanced in a manner hereinafter described. The inclination of the vanes 53 is such that the air flows between the vanes with substantially no resistance. The net effect of the vanes 53 and 54 is to provide a passage around the fan which has an effective area increasing from the cutoff 47 around the fan in the direction of rotation toward the outlet. This is desirable for efficient operation. The vanes 55*a* and 55*b* direct the air through the connecting passage 50 to the discharge outlet 52. The vane 55*b* cooperates with the inclined face 48 of the cutoff to direct a stream of air across the outer edges of the vanes 56*a* and 56*b*. This stream produces an injector action in the passages between these vanes which substantially balances the injector action on the passages between the vanes 54. The net effect is that the stream of air discharge through the passage 50 effectively blocks the passage 51 so that recirculation of air through the passage 51 is prevented. The vane 55*a* is curved so as to direct air along the adjacent wall of the discharge outlet. This makes the distribution of air in the discharge outlet more uniform.

Since the vanes are symmetrical, it is obvious that on rotation of the fan in a counterclockwise direction the functions of the vanes will be interchanged.

By having the end frame 40 serve as the fan casing, a compact and simple construction is obtained. The vanes and cutoff may be cast integral with the end frame or otherwise rigidly fixed thereto. The casing can, therefore, be made as a unit. When used in conjunction with reversible electric motors, the amount of power required to circulate the ventilating air through the motor is very greatly decreased.

What I claim as new and desire to secure by Letters Patent of the United States, is:

1. In a reversible centrifugal pump, an impeller, a casing therefor having a central inlet, a peripheral passage to which the impeller discharges upon rotation of the impeller in opposite directions, a discharge conduit connected to the peripheral passage, vanes in said passage respectively in front of and beyond the discharge conduit as regards the direction of roation of the impeller, the vanes in front of the discharge conduit providing passages therebetween facing the direction of rotation of the impeller and the vanes beyond the discharge conduit having passages therebetween facing away from the direction of rotation of the impeller and being subject to injector action from the discharge fluid for preventing recirculation of the discharge fluid.

2. In a reversible centrifugal pump, an impeller, a casing therefor having a central inlet, a peripheral passage to which the impeller discharges upon rotation of the impeller in opposite directions, a discharge conduit connected to the peripheral passage, oppositely inclined vanes in said passage respectively in front of and beyond the discharge conduit as regards the direction of rotation of the impeller, the inner edges of the vanes in front of the discharge conduit defining passages facing the direction of rotation of the impeller and serving to direct a stream of fluid to the discharge conduit, and the outer edges

of the vanes beyond the discharge conduit defining passages transverse of said stream whereby an injector action is produced preventing recirculation of the discharge fluid.

3. In a reversible centrifugal pump, an impeller, a casing therefor having a central inlet, a peripheral passage to which the impeller discharges upon rotation of the impeller in opposite directions, a discharge conduit connected to the peripheral passage, vanes in said passage respectively in front of and beyond the discharge conduit as regards the direction of rotation of the impeller the inner edges of the vanes in front of the discharge conduit defining passages facing the direction of rotation of the impeller, the inner edges of the vanes beyond the discharge conduit defining a scroll to which the impeller discharges and passages formed by the vanes facing opposite the direction of rotation of the impeller subject to injector action by the fluid moved therepast by the impeller, means for directing fluid from in front of the discharge conduit to the discharge conduit, and means utilizing the discharge fluid for producing an injector action balancing the injector action to which the vanes beyond the discharge conduit are subject.

4. In a reversible centrifugal pump, an impeller, a casing therefor having a central inlet, a peripheral passage to which the impeller discharges upon rotation of the impeller in opposite directions, a discharge conduit connected to the peripheral passage, baffle means in said passage in front of the discharge conduit as regards the direction of rotation of the impeller defining passages facing the direction of rotation of the impeller, baffle means in said passage beyond the discharge conduit as regards the direction of rotation of the impeller defining passages facing opposite the direction of rotation of the impeller subject to injector action by the fluid moved therepast by the impeller, said last baffle means cooperating with the casing to provide a scroll-like passage, means for directing the fluid from in front of said discharge conduit to the discharge conduit, and means utilizing the discharge fluid for producing an injector action balancing the injector action to which the passages beyond the discharge conduit are subject.

5. In a reversible centrifugal pump, an impeller, a casing therefor having a central inlet, a peripheral passage to which the impeller discharges upon rotation of the impeller in opposite directions, a discharge conduit connected to the peripheral passage, baffle means in front of and beyond the discharge conduit as regards the direction of rotation of the impeller, the baffle means in front of the discharge conduit serving to direct fluid therethrough from the impeller and the baffle means beyond the discharge conduit serving to restrict the flow of fluid from the impeller.

6. In a reversible centrifugal pump, an impeller, a casing therefor having a central inlet, a peripheral passage to which the impeller discharges, a discharge conduit connected to said passage, and baffle means acted upon by the fluid discharge of the impeller upon rotation of the impeller in opposite directions for causing the effective area of said passage to increase around the impeller to the discharge conduit as regards the direction of rotation of the impeller.

7. A reversible centrifugal pump having a bladed rotor with an axial inlet opening, a series of flow directing baffles disposed in spaced apart relation on each side of said rotor to form reversed scrolls upon rotation of the rotor in opposite directions, the baffles on one side of the rotor serving to direct fluid therebetween and the baffles on the other side of the rotor having an injector action set up therebetween by the fluid moved therepast by the rotor, and a casing enclosing said rotor and baffles and provided with an outlet formed to produce an injector action preventing recirculation of the fluid through said baffles by said first injector action.

8. A reversible centrifugal pump having a bladed rotor with an axial inlet opening, a series of flow directing baffles disposed in spaced apart relation on each side of said rotor to form reversed scrolls upon rotation of the rotor in opposite directions, the baffles on one side of the rotor serving to direct fluid therebetween and the baffles on the other side of the rotor having an injector action set up therebetween by the fluid moved therepast by the rotor, a casing enclosing said rotor and baffles and provided with an outlet, and fluid flow means for preventing recirculation of the discharge fluid through said baffles by said first injector action.

9. In combination, an electric motor having stationary and rotating members, an impeller on the rotating member at one end thereof having an inlet adjacent the rotating member, an end frame in which the rotating member is journaled having walls providing a peripheral passage to which the impeller discharges and a discharge conduit, and a cutoff carried by the end frame providing passages at all times connecting the peripheral passage and the discharge conduit respectively in front of and beyond the discharge conduit as regards the direction of rotation of the impeller.

10. In combination, an electric motor having stationary and rotating members, an impeller on the rotating member at one end thereof having an inlet adjacent the rotating member, an end frame in which the rotating member is journaled having walls providing a peripheral passage to which the impeller discharges and a discharge conduit, a cutoff carried by the end frame providing passages at all times connecting the peripheral passage and the discharge conduit respectively in front of and beyond the discharge conduit as regards the direction of rotation of the impeller, and vanes carried by said walls respectively in front of and beyond said conduit as regards the direction of rotation of the impeller, the vanes in front of said conduit serving to direct fluid to said discharge conduit, and the vanes beyond said conduit subject to an injector action serving to prevent recirculation of the discharge fluid.

11. In combination, an electric motor having stationary and rotating members, an impeller on the rotating member at one end thereof having an inlet adjacent the rotating member, an end frame in which the rotating member is journaled having walls providing a peripheral passage to which the impeller discharges and a discharge conduit, a cutoff carried by the end frame providing passages at all times connecting the peripheral passage and the discharge conduit respectively in front of and beyond the discharge conduit as regards the direction of rotation of the impeller, means on the end frame for directing a stream of fluid from the peripheral passage to the discharge conduit through the connecting passage in front of the discharge conduit, and means on the end frame utilizing said stream

for blocking the connecting passage beyond the discharge conduit.

12. In a reversible centrifugal pump, an impeller, a casing therefor having a central inlet, a peripheral passage to which the impeller discharges upon rotation of the impeller in opposite directions, a discharge conduit connected to the peripheral passage, and vane means in said passage beyond the discharge conduit as regards one direction of rotation of the impeller and in front of said discharge conduit as regards the reverse direction of rotation of the impeller, the vane means while the impeller is rotating in such direction that the vane means are in front of the discharge conduit defining passages facing the direction of rotation of the impeller and serving to direct a stream of fluid to the discharge conduit, and the vane means while the impeller is rotating in such direction that the vane means are beyond the discharge conduit defining passages transverse to the fluid stream flowing to the discharge conduit whereby an injector action is produced preventing recirculation of the discharge fluid.

13. In a reversible centrifugal pump, an impeller, a casing therefor having a central inlet, a peripheral passage to which the impeller discharges upon rotation of the impeller in opposite directions, a discharge conduit connected to the peripheral passage, vane means in said passage beyond the discharge conduit as regards one direction of rotation of the impeller defining a scroll to which the impeller discharges and passages formed by the vanes having the outer ends in said peripheral passage and the inner ends presented to the impeller and facing opposite said one direction of rotation of the impeller so as to be subject to the injector action by the fluid moved therepast by the impeller during rotation of the impeller in said one direction and so as to direct fluid toward the discharge conduit during rotation of the impeller in the reverse direction, means for directing fluid from in front of the discharge conduit to the discharge conduit during rotation of the impeller in said one direction, and means utilizing the discharge fluid during said one direction of rotation of the impeller for producing an injector action balancing the injector action to which said passages defined by said vane means are subject.

14. In combination, an electric motor having stationary and rotating members, an impeller on the rotating member at one end thereof having an inlet adjacent the rotating member, an end frame in which the rotating member is journaled having walls providing a peripheral passage to which the impeller discharges and a discharge conduit, a cutoff carried by the end frame providing passages at all times connecting the peripheral passage and the discharge conduit respectively in front of and beyond the discharge conduit as regards one direction of rotation of the impeller, and a vane carried by said walls beyond said conduit as regards one direction of rotation of the impeller and in front of the conduit as regards the reverse direction of rotation of the impeller, the vane while the impeller is rotating in such direction that it is beyond the discharge conduit being subject to an injector action serving to prevent recirculation of the discharge fluid, and the vane while the impeller is rotating in such direction that it is in front of the conduit serving to direct fluid to said discharge conduit.

15. In combination, an electric motor having stationary and rotating members, an impeller on the rotating member at one end thereof having an inlet adjacent the rotating member, an end frame in which the rotating member is journaled having walls providing a peripheral passage to which the impeller discharges and a discharge conduit, a cutoff carried by the end frame providing passages at all times connecting the peripheral passage and the discharge conduit respectively in front of and beyond the discharge conduit as regards one direction of rotation of the impeller, means on the end frame for directing a stream of fluid from the peripheral passage to the discharge conduit through the connecting passage in front of the discharge conduit during said one direction of rotation, and means on the end frame utilizing said stream for producing an injector action blocking the connecting passage beyond the discharge conduit during said one direction of rotation.

KENTON D. McMAHAN.