US 20170174396A1

(19) United States

(12) Patent Application Publication

Tatom

(10) Pub. No.: US 2017/0174396 A1

(43) Pub. Date: Jun. 22, 2017

(54) **CUSTOMIZABLE PACKAGING BAGS**

(71) Applicant: **Patrick Alan Tatom**, Conroe, TX (US)

(72) Inventor: **Patrick Alan Tatom**, Conroe, TX (US)

(21) Appl. No.: **14/975,212**

(22) Filed: **Dec. 18, 2015**

Publication Classification

(51) **Int. Cl.**
B65D 33/00 (2006.01)

(52) **U.S. Cl.**
CPC *B65D 33/004* (2013.01); *B65D 33/002* (2013.01)

(57) **ABSTRACT**

A roll of heat sealable bags having markings on the bags to indicate the weight of a portion of bag material located between any two markings. A user can cut off any desired length of the roll to form a customized bag of a desired size. The user can then quickly determine the weight of the customized bag by visual inspection of the number of markings on the bag. After filling the bag with items to be packaged, the markings allow the user to determine an accurate weight of the contents of the bag by weighing the filled bag and subtracting the weight of the bag material from the overall weight of the bag plus contents.

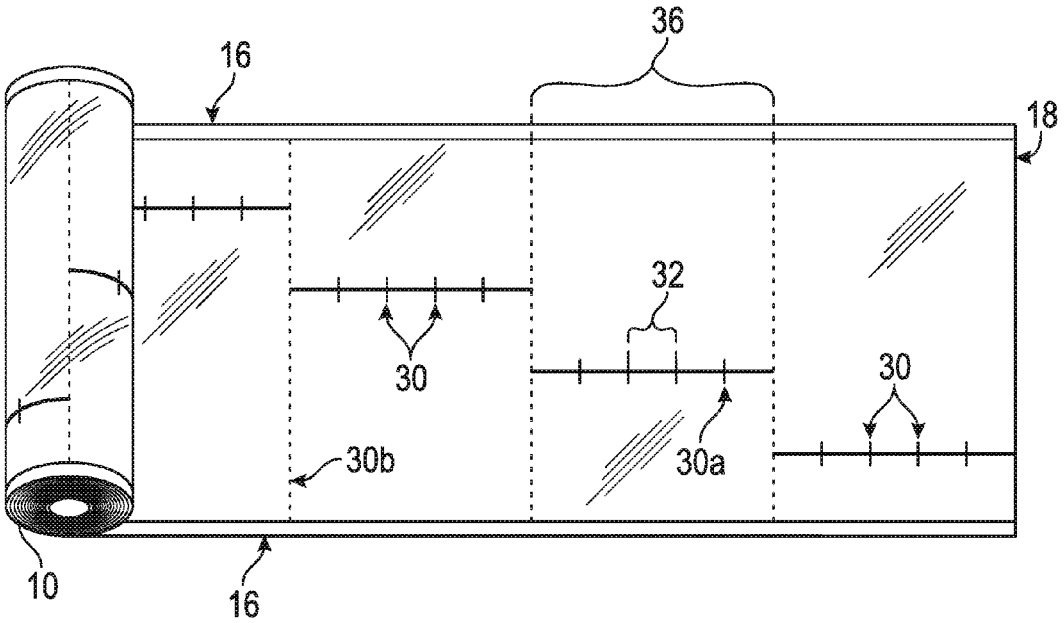

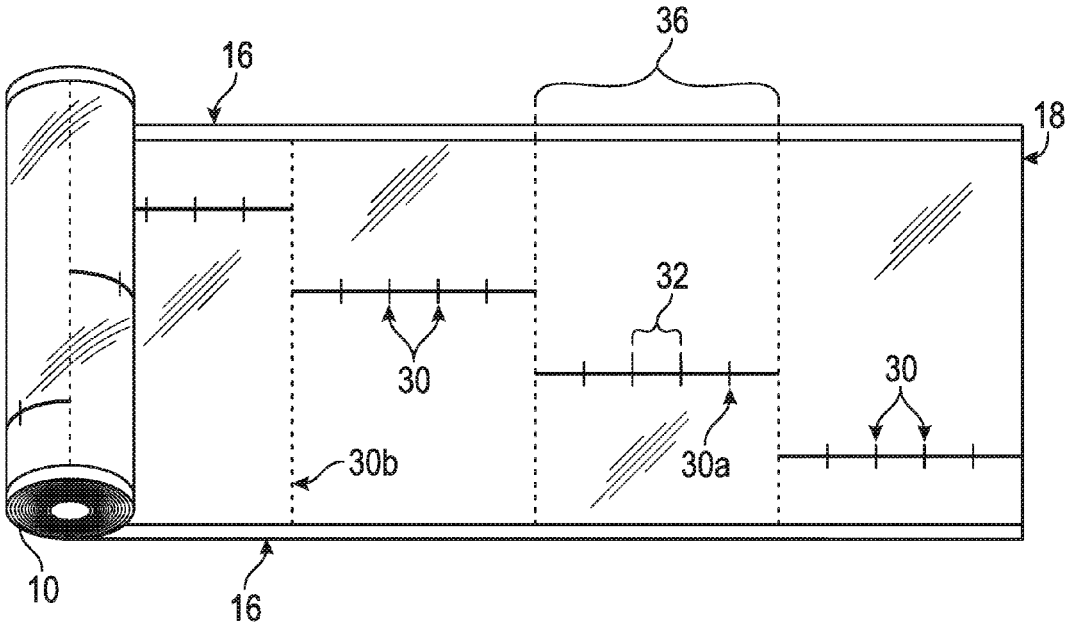

FIG. 1

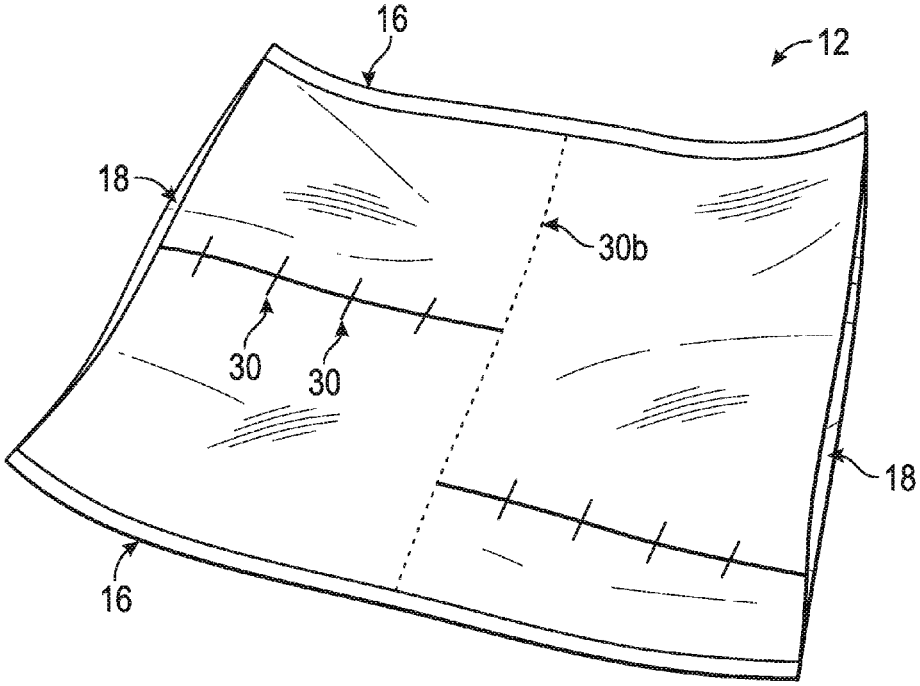

FIG. 2

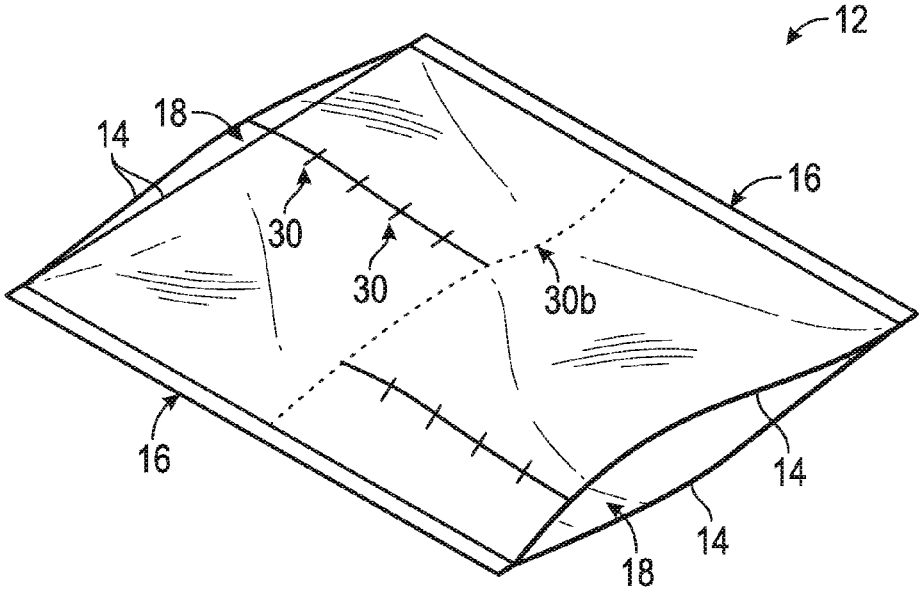

FIG. 3

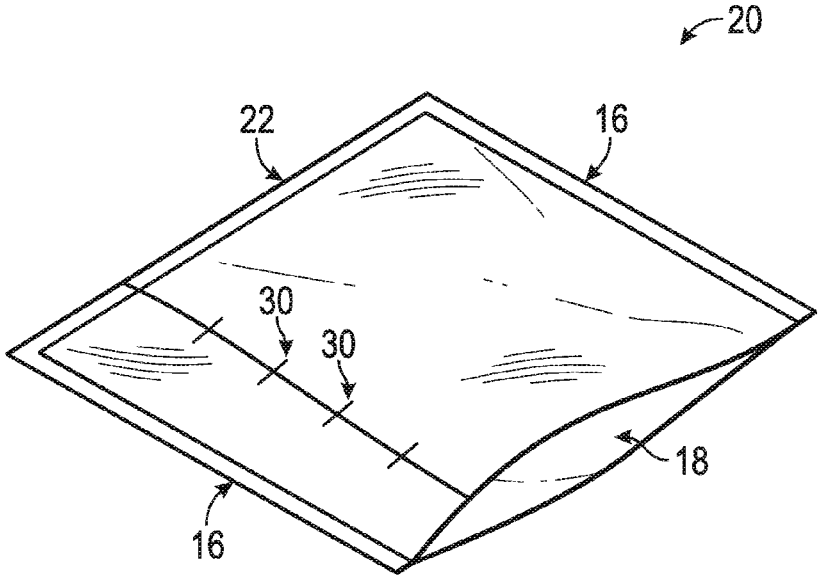

FIG. 4

CUSTOMIZABLE PACKAGING BAGS

FIELD OF THE INVENTION

[0001] The present invention refers generally to packaging bags and, more specifically, to packaging bags that can be cut into different sizes to form a customized bag of a desired size.

BACKGROUND

[0002] A variety of manufacturers produce packaging bags that can be heat sealed for storing items in bags. Typical bags may be sold as individual bags or as a roll that can be cut to form bags of varying sizes, as desired by the user. When a user cuts off a length of the roll corresponding to a desired bag size, the user heat seals one open end of the bag and then places items to be stored inside the bag enclosure. Once the items are inside, an opposing open end of the bag is heat sealed to complete the bag enclosure.

[0003] Often, heat sealable bags are used for vacuum packing items in the bag. For this purpose, a variety of vacuum sealers are commercially available. Vacuum sealers are typically capable of pulling a vacuum on the interior of the bag and then heat sealing the bag closed to maintain the vacuum. Because vacuum packing removes oxygen and inhibits bacterial growth, it is often used to store items, and especially food items, for extended periods of time. For instance, meat may be vacuum packed before freezing. Other items such as coffee, tea leaves, nuts, cheese, or smoked or cured meats may be vacuum packed to maintain freshness over extended periods of time.

[0004] Some vacuum packed items may be sold by weight for commercial purposes. When selling vacuum packed items, the seller may choose to sell bags of varying sizes and weigh each bag individually to determine the cost of each bag of product. To measure a precise weight of the contents of the filled bag, the weight of the bag itself must be known so that the bag weight can be subtracted from the overall weight of the filled bag. However, when using individual bags of varying sizes, there is no convenient way to know the weight of the bag.

[0005] Accordingly, a need exists in the art for a customizable bag designed such that a user can quickly and easily determine the weight of any individual bag regardless of the size of a particular bag.

SUMMARY

[0006] An objective of the present invention is to provide packaging bags or a roll of packaging bags having markings fixed upon the bags to indicate the weight of any portion of the bag material located between any two markings.

[0007] In one aspect, a roll of packaging bags has markings at spaced intervals along the length of the roll. A portion of the length of the roll can be cut off to form a customized bag of a desired size to accommodate varying quantities of items to be packaged within the bag. The markings correspond to the weight of the bag material located between any two markings. Thus, the weight of any particular bag can be determined by a quick visual inspection of the number of markings on the bag. Once items have been packaged in the customized bag, the weight of the contents of the bag can be easily determined by weighing the entire bag including the contents and then subtracting the weight of the bag material as indicated by the markings.

[0008] In a typical embodiment, the roll of bags comprises two superposed layers of flexible material that can be cut with scissors, a knife, or similar cutting tool. A desired portion of the roll is cut off corresponding to a desired bag size. The removed bag portion is open at both ends. The flexible material comprises thermoplastic such that the material can be heat sealed at both ends to form a sealed bag enclosure. A plurality of customized bags of varying sizes may be formed from the roll of bags.

[0009] In another aspect, individual bags are provided with markings at spaced intervals along the length of each bag. Individual bags have only one open end to be heat sealed to form the sealed bag enclosure. In this case, a portion of the bag can be removed to form a smaller bag, and the markings indicate the weight of the remaining bag material.

DESCRIPTION OF THE DRAWINGS

[0010] These and other features, aspects, and advantages of the present invention will become better understood with regard to the following description, appended claims, and accompanying drawings where:

[0011] FIG. **1** is a perspective view of a roll of bags embodying features of the present invention.

[0012] FIG. **2** is a perspective view of a portion of a roll of bags embodying features of the present invention.

[0013] FIG. **3** is a perspective view of a portion of a roll of bags embodying features of the present invention.

[0014] FIG. **4** is a perspective view of a bag embodying features of the present invention.

DETAILED DESCRIPTION

[0015] In the Summary above and in this Detailed Description, and the claims below, and in the accompanying drawings, reference is made to particular features, including method steps, of the invention. It is to be understood that the disclosure of the invention in this specification includes all possible combinations of such particular features. For example, where a particular feature is disclosed in the context of a particular aspect or embodiment of the invention, or a particular claim, that feature can also be used, to the extent possible, in combination with/or in the context of other particular aspects of the embodiments of the invention, and in the invention generally.

[0016] The term "comprises" and grammatical equivalents thereof are used herein to mean that other components, ingredients, steps, etc. are optionally present. For example, an article "comprising" components A, B, and C can contain only components A, B, and C, or can contain not only components A, B, and C, but also one or more other components.

[0017] Where reference is made herein to a method comprising two or more defined steps, the defined steps can be carried out in any order or simultaneously (except where the context excludes that possibility), and the method can include one or more other steps which are carried out before any of the defined steps, between two of the defined steps, or after all the defined steps (except where the context excludes that possibility).

[0018] In a preferred embodiment, the present invention is directed generally to individual bags or a roll of bags having markings along a length of the bags for indicating the weight of a portion of the bag material located between any two

markings. The bags are made of a flexible material that can be cut with scissors, a knife, or similar cutting tool to form customized bags of varying sizes. Once a customized bag has been formed, the markings allow a user to easily determine the weight of the customized bag based on the number of markings positioned between each end of the bag, regardless of the size of any particular bag. By determining the weight of the bag, the weight of the contents of the bag can then be easily determined after packaging simply by weighing the entire bag including the contents and then subtracting the weight of the bag as determined according to the markings. Thus, the user does not have to weigh each customized bag before filling the bag to determine the weight of the contents. Bags having markings in accordance with the invention are particularly advantageous when packaging and selling items by weight. For instance, a quantity of loose items such as coffee grinds or tea leaves can be weighed quickly and accurately while taking into account the weight of the bag itself. Customized bags of varying sizes holding various quantities of such items may then be sold according to a precise weight measurement.

[0019] Turning now to the drawings, FIGS. **1-4** illustrate preferred embodiments of the present invention. FIG. **1** shows a roll of bags **10** having markings **30** at spaced intervals along the length of the roll **10**. In a preferred embodiment, the roll **10** comprises two superposed layers **14** of flexible material that can be cut to form a customized bag **12**. As used herein, the term "customized" or "customizable" refers to bags customized with respect to the size of the bag. In preferred embodiments, as shown in FIGS. **1-4**, the size of the bag is customized by varying the length of the bag.

[0020] FIG. **3** illustrates the two separate layers **14** of the roll **10**. The layers **14** of flexible material preferably comprise thermoplastic such that the layers **14** can be heat sealed together to form a sealed bag enclosure. Suitable thermoplastics may include various types of polyethylene or similar thermoplastics known in the art. The material chosen is preferably suitable for vacuum sealing the contents of the bag.

[0021] As shown in FIG. **1**, the roll **10** has two opposing sides **16** and two opposing ends **18**, though only one end **18** is visible in FIG. **1**. The layers **14** are sealed together along each opposing side **16**. At least one end **18** of the roll **10** is open such that items may be placed between the layers **14** of the bag **12** by inserting the items into an open end **18**.

[0022] The roll **10** is used to create a plurality of individual bags **12**. To create an individual bag, a length of the roll **10** is cut off from the end of the roll **10** to form a customized bag portion **12** of a desired size. FIGS. **2** and **3** show examples of a customized bag portion **12** that has been removed from the roll **10**. As shown in FIGS. **2-3**, the bag portion **12** removed from the roll **10** has two opposing ends **18** that are each open. One end **18** is first heat sealed to seal that end closed. Items may then be placed into the bag enclosure between the layers **14** of the bag **12**. The other end **18** may then be heat sealed to complete the sealed bag enclosure.

[0023] As shown in FIG. **1**, the roll **10** has markings **30** at spaced intervals along the length of the roll **10**. The markings **30** are configured to indicate the weight of bag material located between any two markings. Accordingly, the weight of any customized bag formed by cutting the roll **10** in a direction generally perpendicular to each side **16** of the roll can be determined by counting the number of markings **30** on the customized bag. The markings **30** are fixed on at least one layer **14** of the roll **10**, and preferably on both layers **14**. The markings **30** are preferably printed on the exterior of the layers **14** but may be fixed by other means such as etching the markings **30** into the layers **14** of bag material. The markings **30** preferably comprise a series of short, straight lines configured in a direction generally perpendicular to each of the sides **16** of the roll **10**, wherein each line is equidistant from each adjacent line. However, it should be understood that the present invention is not limited to any particular type or style of markings. As shown in FIGS. **1-4**, element number **30** is directed to exemplary markings for ease of illustration only, and it should be understood that element number **30** applies to all markings **30** shown in FIGS. **1-4**.

[0024] As shown in FIG. **1**, the markings **30** are configured such that each marking is approximately equidistant from each adjacent marking. In a preferred embodiment, the markings **30** are configured in increments **32** of approximately one gram of bag material weight. Thus, if a portion of bag material were removed from the roll **10** by making two parallel cuts in the bag material at adjacent markings **30** in a direction generally perpendicular to each side **16** of the roll **10**, the weight of the removed portion of bag material would be approximately one gram. Using the roll **10** shown in FIG. **1** as an example, if a portion of bag material were removed from the roll **10** by making a cut in the roll **10** perpendicular to each side **16** at the marking labeled **30***a*, the removed portion would comprise approximately six one-gram increments **32** between marking **30***a* and the end **18** of the roll **10**. Accordingly, this portion would have a bag weight of approximately six grams.

[0025] The example bags **12** shown in FIGS. **2-3** each comprise approximately ten one-gram increments **32** as indicated by the markings **30** shown between each end **18** of each of the bags **12**. Thus, the bags **12** shown in FIGS. **2-3** would each weigh approximately ten grams. The weight may be determined by a simple visual observation of the markings **30** on the bag **12**. It should be understood that the markings **30** are indicators of the approximate weight of the bag **12** and the actual weight may vary depending on the precise location of the cut and whether the roll **10** is cut in a straight line.

[0026] In a preferred embodiment, as shown in FIGS. **1-3**, every fifth marking **30***b* extends across the width of the roll **10** in a direction generally perpendicular to the sides **16** of the roll **10**. Thus, the distance between each of the extended markings **30***b* represents a five-gram increment **36**. This embodiment is preferred because the extended markings **30***b* allow a user to quickly calculate the total number of markings **30** on a bag **12** by visually counting five-gram increments **36**. The extended markings **30***b* also provide the user with a convenient line to follow when cutting a bag **12** from a roll of bags **10**.

[0027] In another preferred embodiment, as shown in FIGS. **1-3**, a group of markings **30** within a five-gram increment **36** are staggered compared to the group of markings **30** contained within an adjacent five-gram increment **36**. The staggering of markings **30** in this manner again provides the user with an easy visual representation of five-gram increments **36** for ease of determining the weight of a bag **12**.

[0028] FIG. **4** illustrates an alternative embodiment of the present invention. In this embodiment, a single bag **20** is

provided. As in previously discussed embodiments, the bag **20** comprises two superposed layers **14** of flexible material, preferably comprising thermoplastic for heat sealing the bag **20** closed. The bag **20** has two opposing sides **16** that are sealed together. The bag **20** has a closed end **22** and an opposing open end **18**. The bag **20** has markings **30** at spaced intervals along the length of the bag **20**, as in previous embodiments. In order to customize the size of the individual bag **20**, a portion of the bag material is removed from the open end **18** of the bag **20** by cutting the layers **14** of bag material in a direction generally perpendicular to the sides **16** of the bag **20**. Preferably, individual bags **20** are relatively large such that the bag size can be reduced as needed. The markings **30** on the bag **12** after the size has been reduced will indicate the weight of the remaining portion of the bag **20**.

[0029] It should be noted that FIGS. **1-4** may not be drawn to scale and the specific location of the markings **30** shown in these figures are illustrative only. In addition, it should be understood that the spacing of the markings **30** may be adjusted to correspond to any desired bag material weight and still fall within the scope of the present invention. For instance, the markings **30** may be spaced closer together to correspond to increments of less than one gram, such as 0.5-gram increments, in order to provide a more accurate bag weight. Additionally, FIG. **3** illustrates a bag **12** having two flat layers **14**. In alternative embodiments, the layers **14** may be pleated such that the bag **12** is capable of holding a greater quantity of items. In this case, the pleats may add to the overall bag weight, and the spacing of the markings **30** may be adjusted to account for the added weight.

[0030] It is understood that versions of the invention may come in different forms and embodiments. Additionally, it is understood that one of skill in the art would appreciate these various forms and embodiments as falling within the scope of the invention as disclosed herein.

What is claimed is:

1. A heat sealable bag, wherein the bag has markings at spaced intervals along a length of the bag, said markings configured to indicate the weight of bag material located between any two markings.

2. The bag of claim **1**, said bag comprising two superposed layers of flexible material comprising thermoplastic, said bag having two opposing sides and two opposing ends, wherein the two layers are sealed together along each opposing side, wherein at least one end is open such that a sealed bag enclosure can be formed by heat sealing the at least one open end, and wherein the markings are fixed on at least one layer of material.

3. The bag of claim **1**, wherein the markings are staggered.

4. The bag of claim **1**, wherein the markings are configured in increments of about one gram of bag material weight.

5. A roll of heat sealing bags, wherein the roll has markings at spaced intervals along a length of the roll, said markings configured to indicate the weight of bag material located between any two markings.

6. The roll of bags of claim **5**, said roll comprising two superposed layers of flexible material comprising thermoplastic, said roll having two opposing sides and two opposing ends, wherein the two layers are sealed together along each opposing side, wherein at least one end is open such that a plurality of individual sealed bag enclosures can be formed by cutting off a length of the roll to form a customized bag portion having two open ends and heat sealing each open end of the bag portion, and wherein the markings are fixed on at least one layer of material.

7. The roll of bags of claim **5**, wherein the markings are staggered.

8. The roll of bags of claim **5**, wherein the markings are configured in increments of about one gram of bag material weight.

9. A bag, comprising two superposed layers of flexible material, said bag having two opposing ends, wherein at least one end is open, wherein the size of the bag can be customized by cutting the superposed layers to remove a portion of the material, wherein at least one layer has markings fixed at spaced intervals along a length of the bag, said markings configured to indicate the weight of the remaining portion of the bag.

10. The bag of claim **9**, wherein the markings are staggered.

11. The bag of claim **9**, wherein the markings are configured in increments of about one gram of bag material weight.

* * * * *