US 20070142178A1

(19) **United States**

(12) **Patent Application Publication** (10) **Pub. No.: US 2007/0142178 A1**

Harney et al. (43) **Pub. Date: Jun. 21, 2007**

(54) **AUTOMATED PHYSICAL TRAINING SYSTEM**

(75) Inventors: **Randy Harney**, St. Paul, MN (US); **Ryan Fuchs**, Hopkins, MN (US)

Correspondence Address:
Patterson, Thuente, Skaar & Christensen, P.A.
4800 IDS Center
80 South 8th Street
Minneapolis, MN 55402-2100 (US)

(73) Assignee: **P.A. Interactive, LLC**

(21) Appl. No.: **11/443,465**

(22) Filed: **May 30, 2006**

Related U.S. Application Data

(63) Continuation of application No. 10/210,507, filed on Aug. 1, 2002, now Pat. No. 7,063,647, and which is a continuation-in-part of application No. 09/794,775, filed on Feb. 27, 2001, now Pat. No. 6,575,879.

(60) Provisional application No. 60/309,316, filed on Aug. 1, 2001. Provisional application No. 60/193,316, filed on Mar. 30, 2000.

Publication Classification

(51) **Int. Cl.**
A63B 71/00 (2006.01)

(52) **U.S. Cl.** **482/8**

(57) **ABSTRACT**

The present invention is a system for automatically controlling and assessing a user athlete's physical training prowess at certain athletic skills. An apparatus of the present invention can be a treadmill sled having a frame, a rotatable continuous belt mounted on the frame, the belt presenting an upward directed support surface for supporting a user athlete, a training apparatus, and a performance measuring system. The training apparatus can include a blocking dummy and support frame, or a tether frame support system. Further, the performance measuring system can include programmable and automated control of the timing, duration, and scope/level of the physical training, and present quantitative assessment feedback to better maximize the applicable training regime, and to simplify the training sessions for supervisory personnel as well as the participating athlete(s).

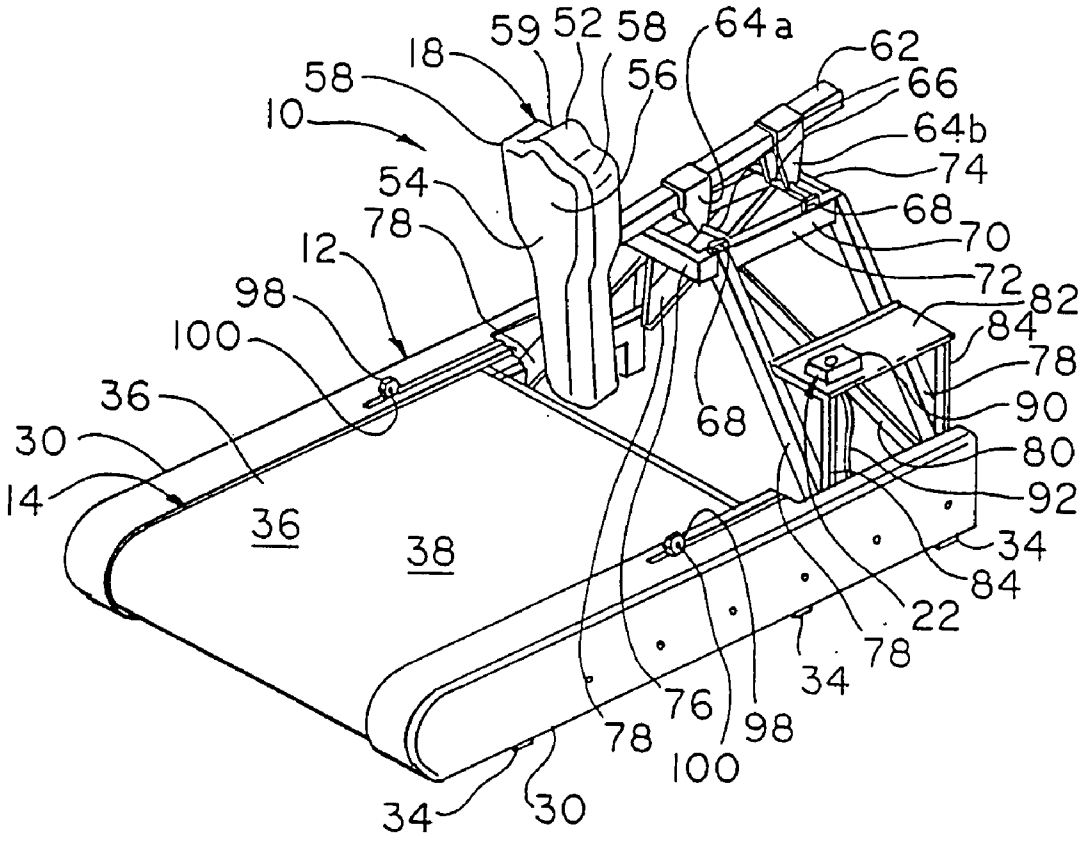

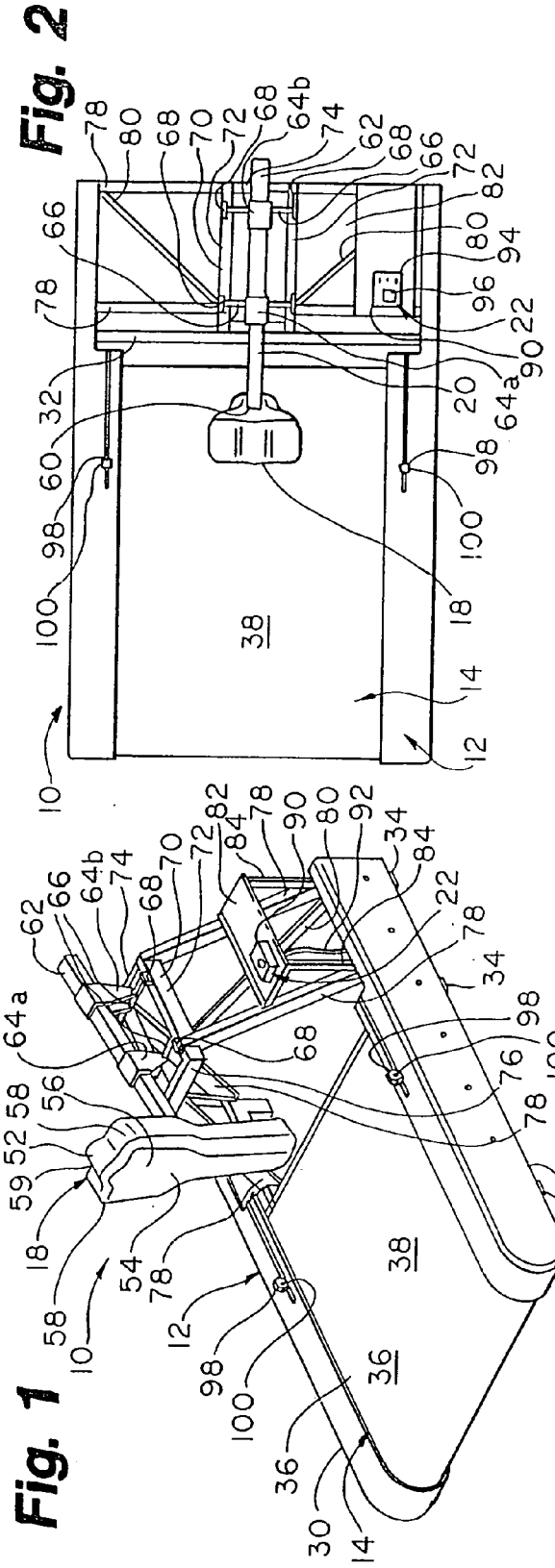
Fig. 1
Fig. 2
Fig. 3
Fig. 4
38
36

Fig. 5

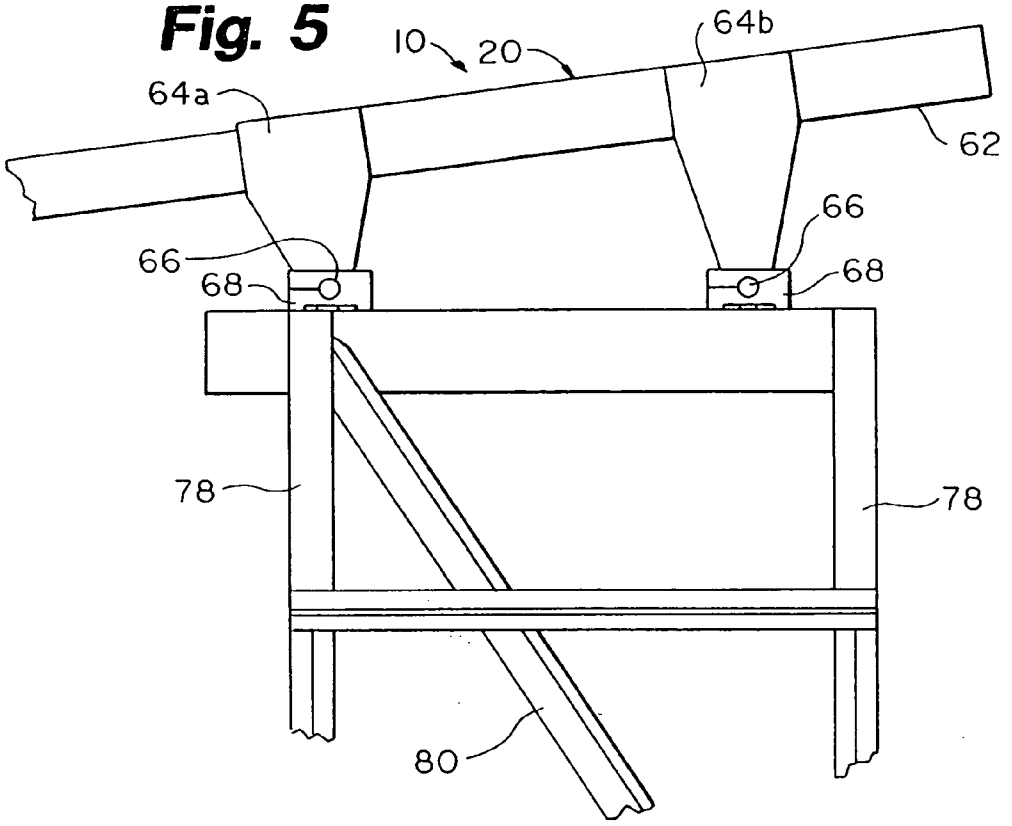
10
20
64b
64a
62
66
66
68
68
78
78
80

Fig. 6

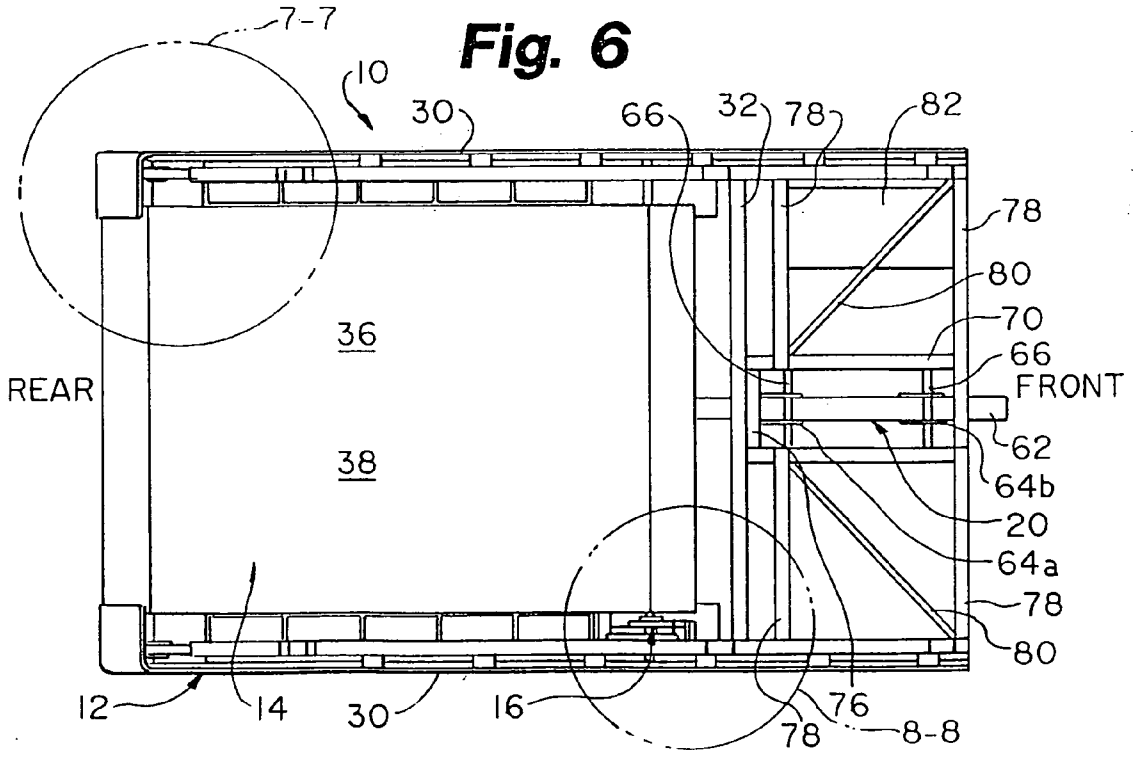
7-7
10
30
66
32
78
82
78
80
70
66
FRONT
62
64b
20
64a
78
80
36
38
REAR
12
14
30
16
76
78
8-8

Fig. 7

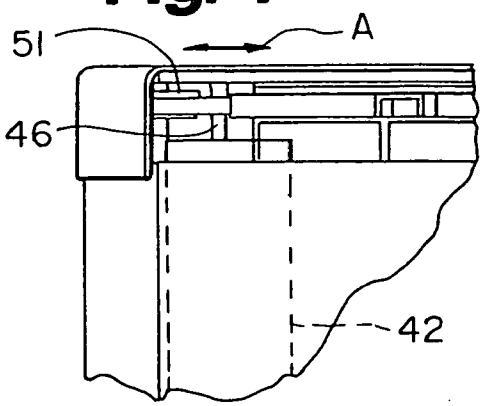

Fig. 8

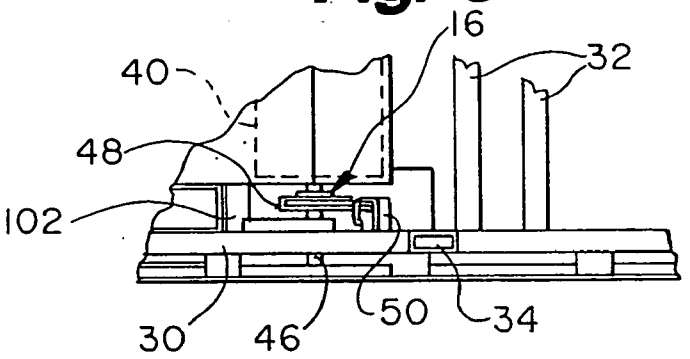

Fig. 9

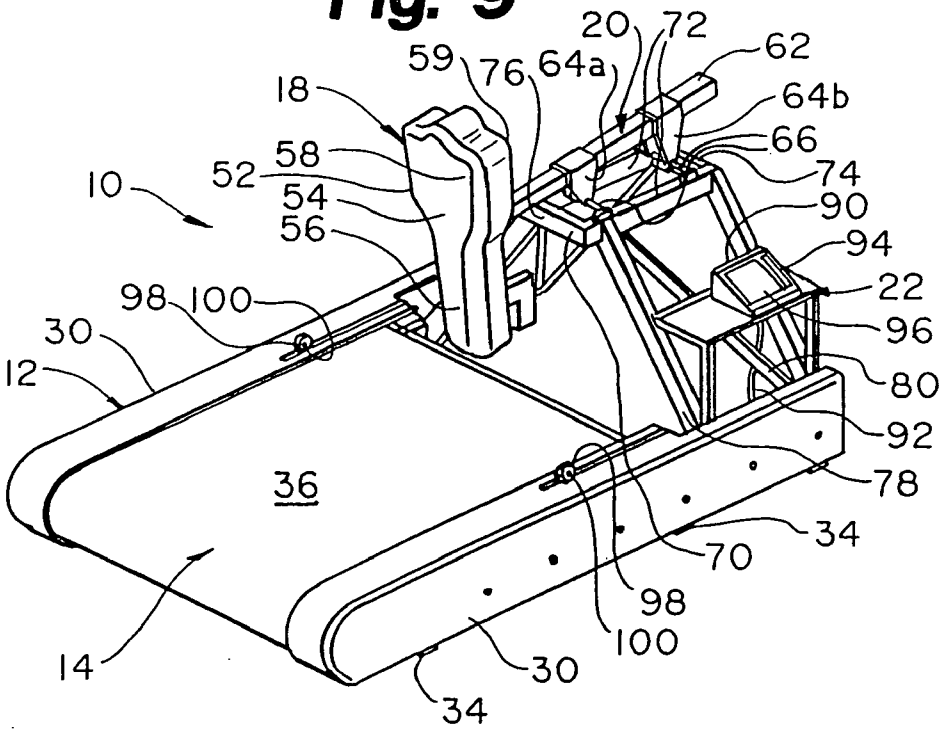

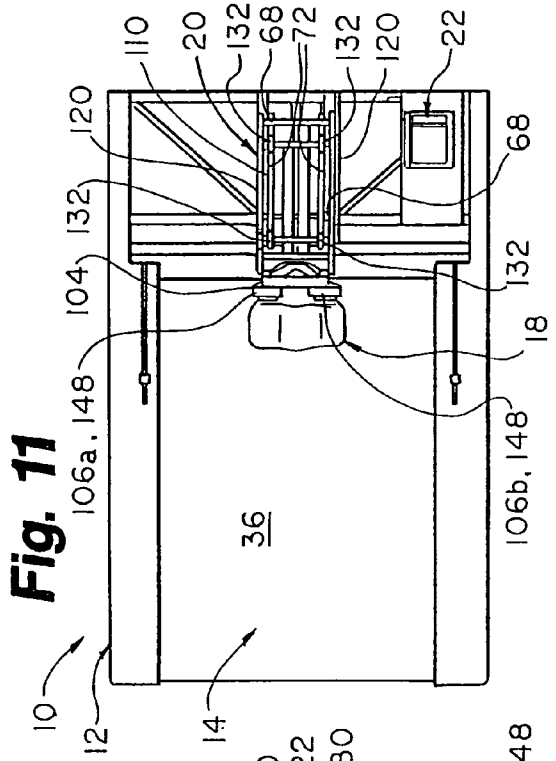

Fig. 11

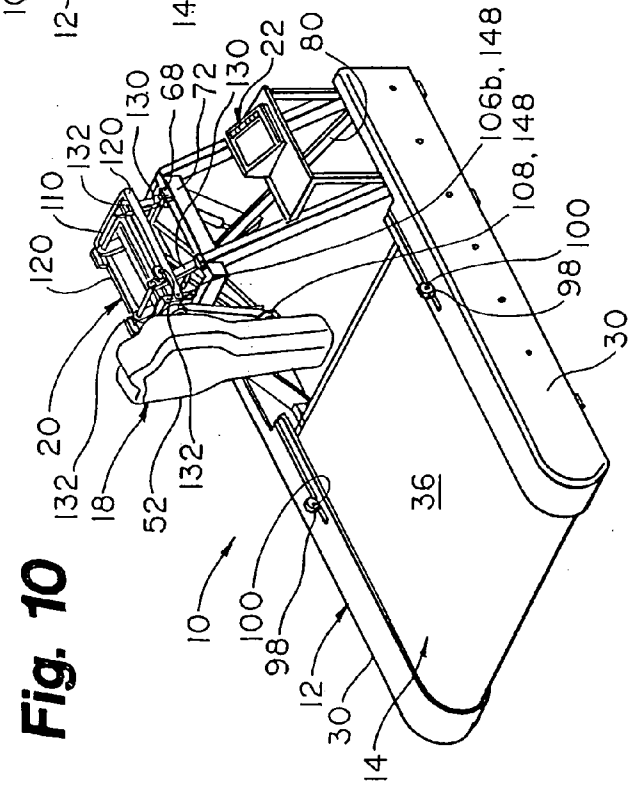

Fig. 10

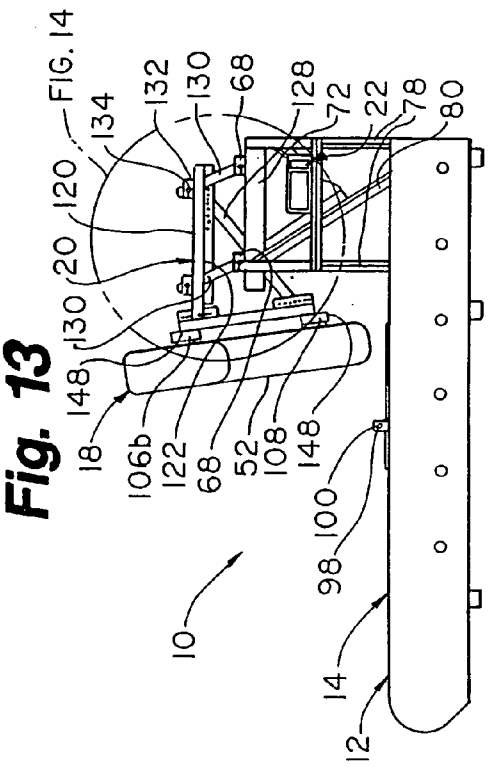

Fig. 13

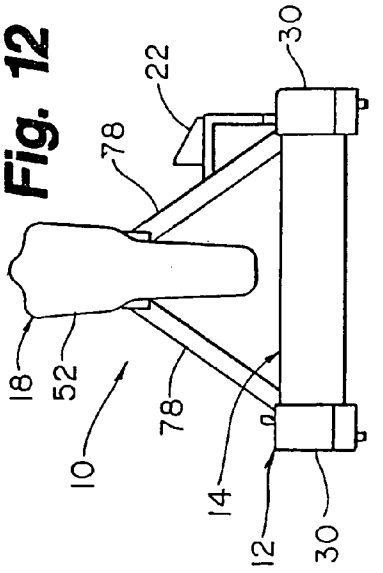

Fig. 12

Fig. 14

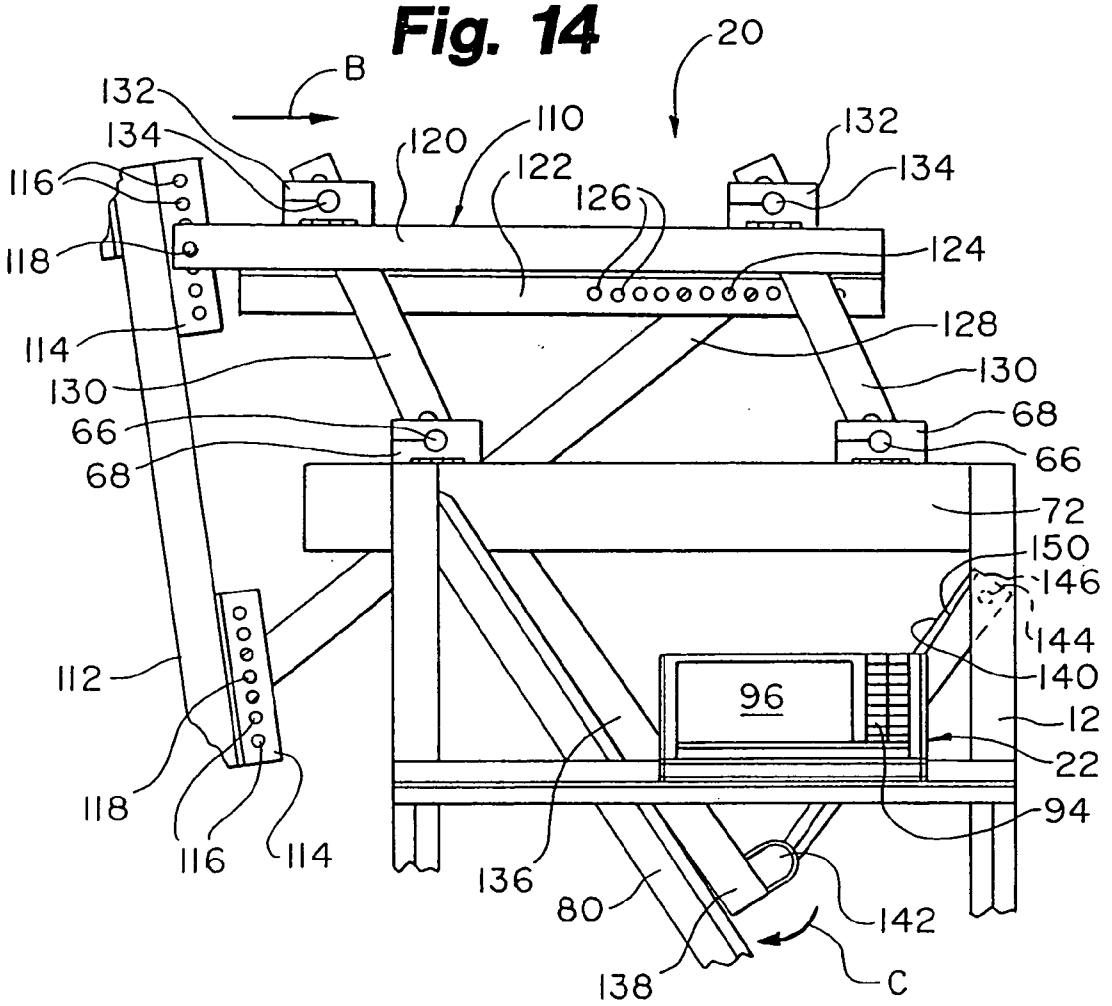
20
B
132
134
116
118
114
130
66
68
120
110
122
126
124
128
72
150
146
144
140
12
22
94
96
112
136
80
138
142
C

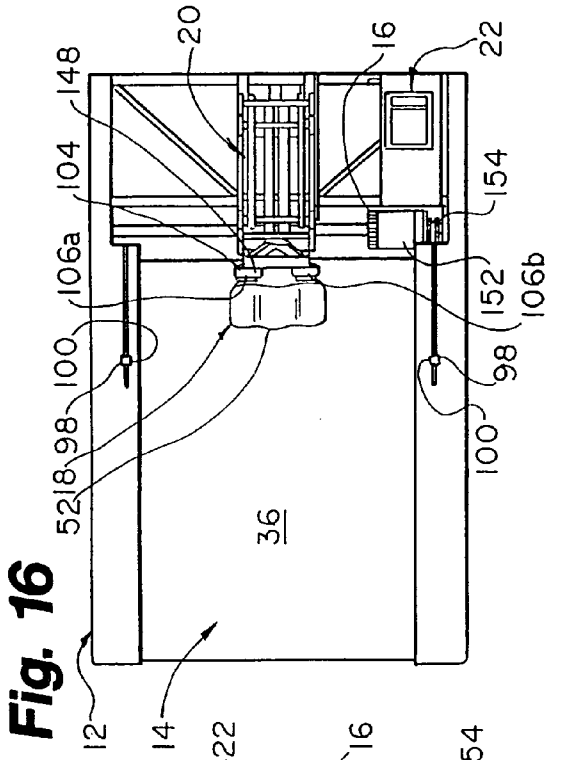

Fig. 16

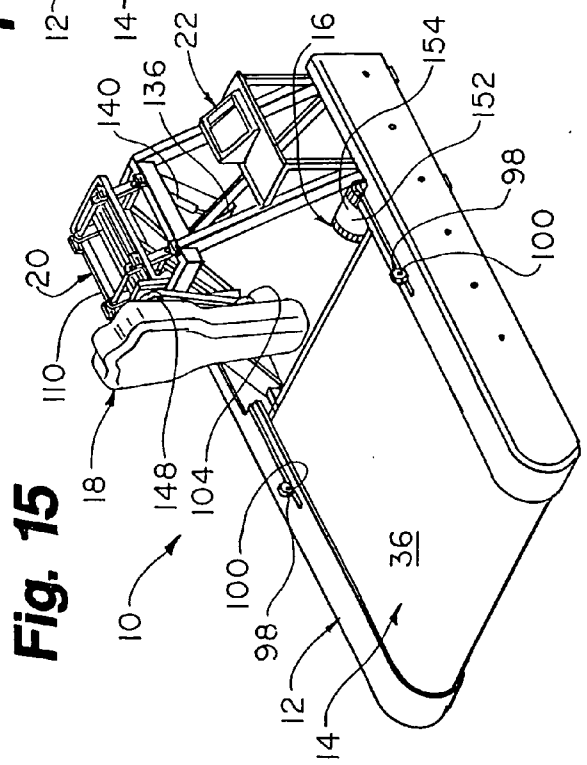

Fig. 15

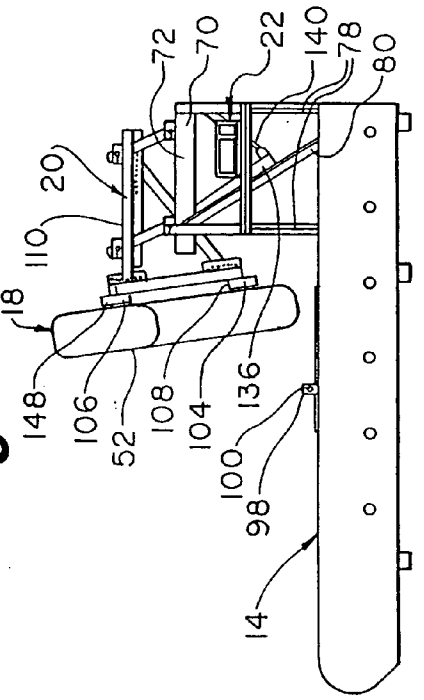

Fig. 17

Fig. 18

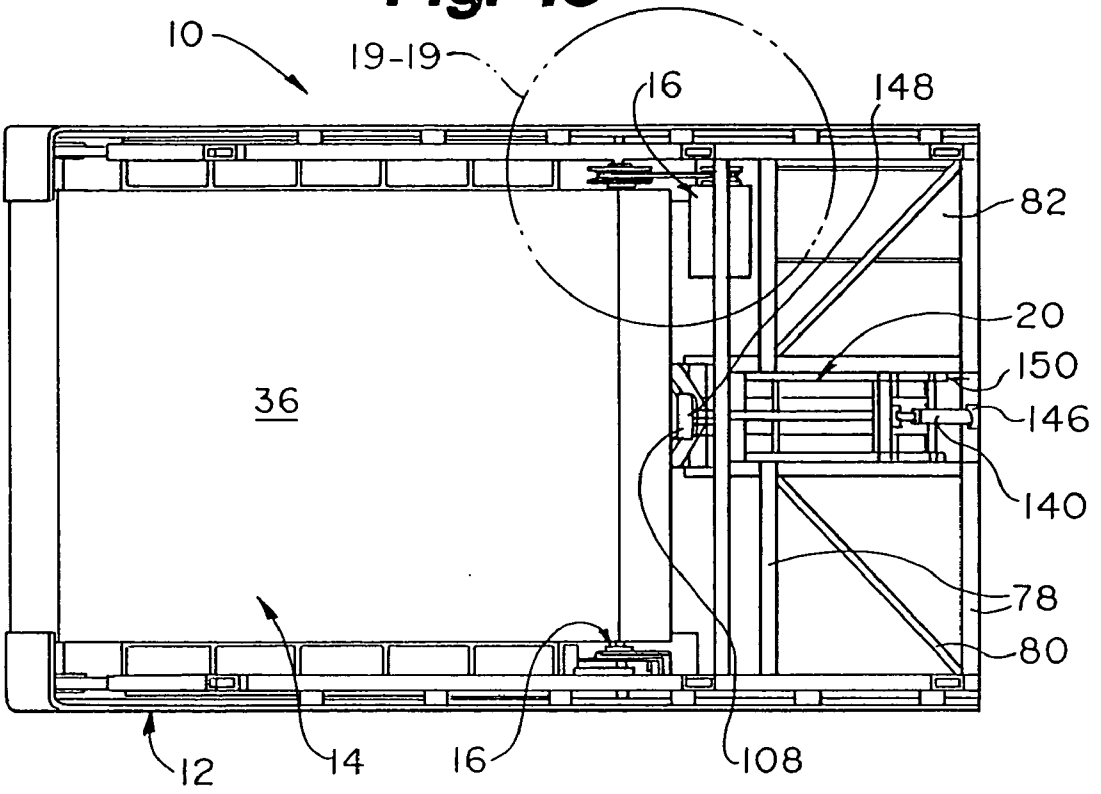
10
19-19
16
148
82
20
150
146
140
36
78
80
12
14
16
108

Fig. 19

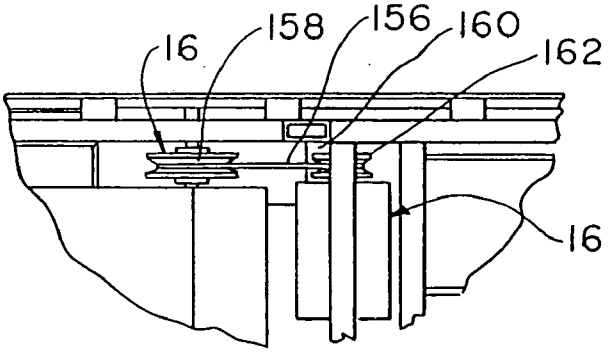
16
158
156
160
162
16

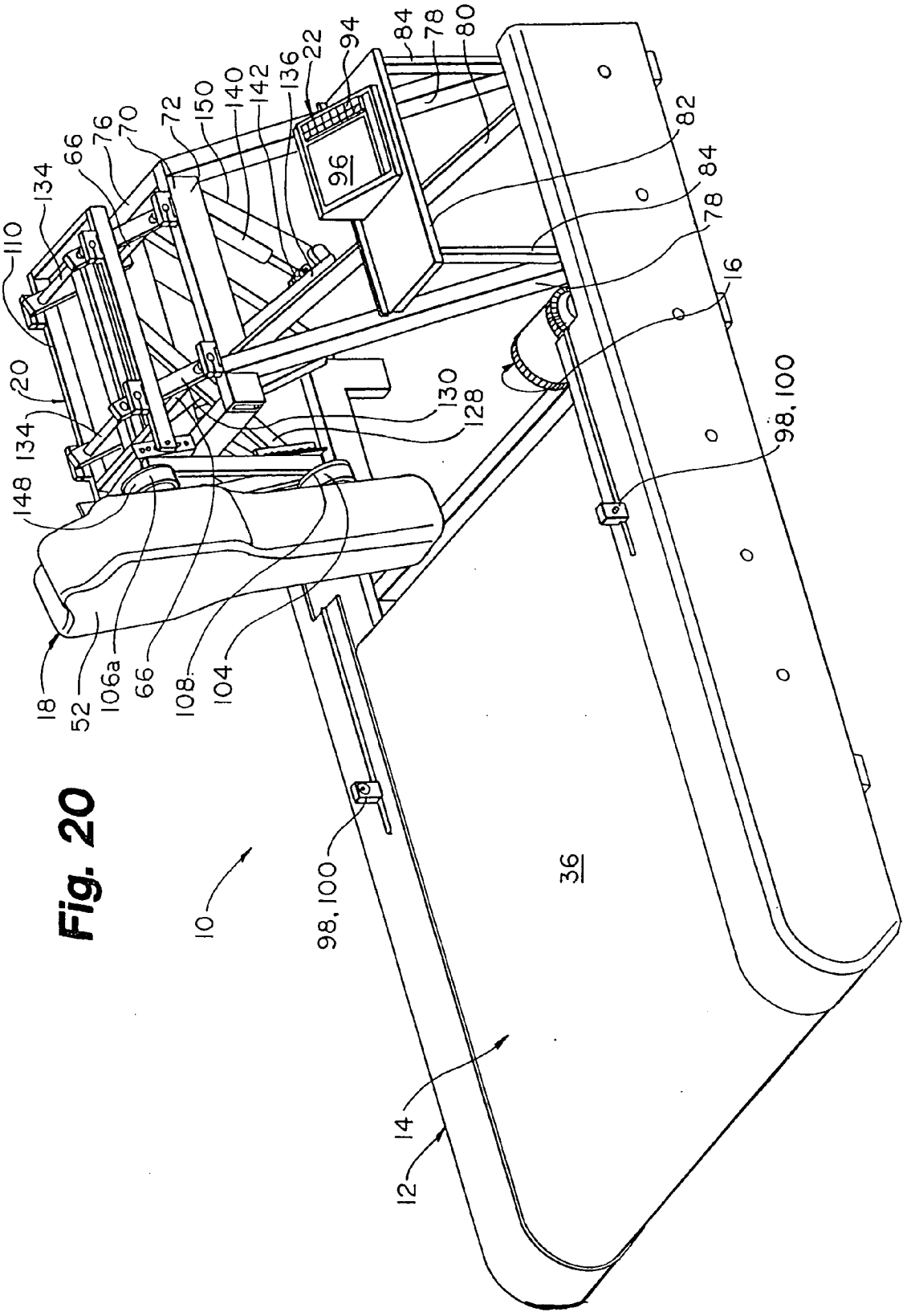
110
134
66
76
70
72
150
140
142
136
22
94
84
78
80
82
96
20
148
134
130
128
16
98, 100
18
52
106a
66
108
104
10
98, 100
36
14
12

Fig. 20

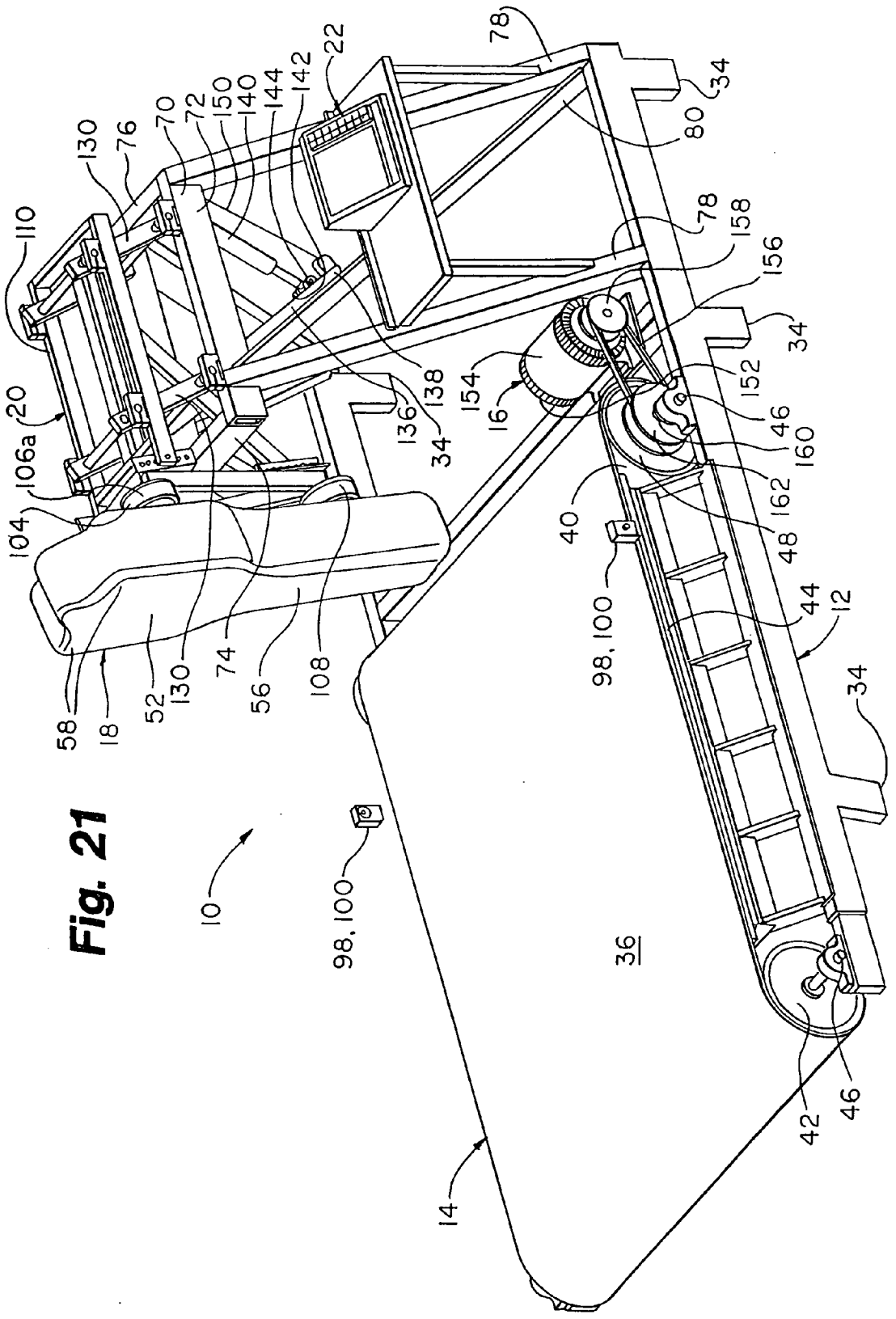
10
12
14
16
18
20
22
34
36
40
42
44
46
48
52
56
58
70
72
74
76
78
80
98, 100
104
106a
108
110
130
136
138
140
142
144
150
152
154
156
158
160
162

Fig. 21

Fig. 22a

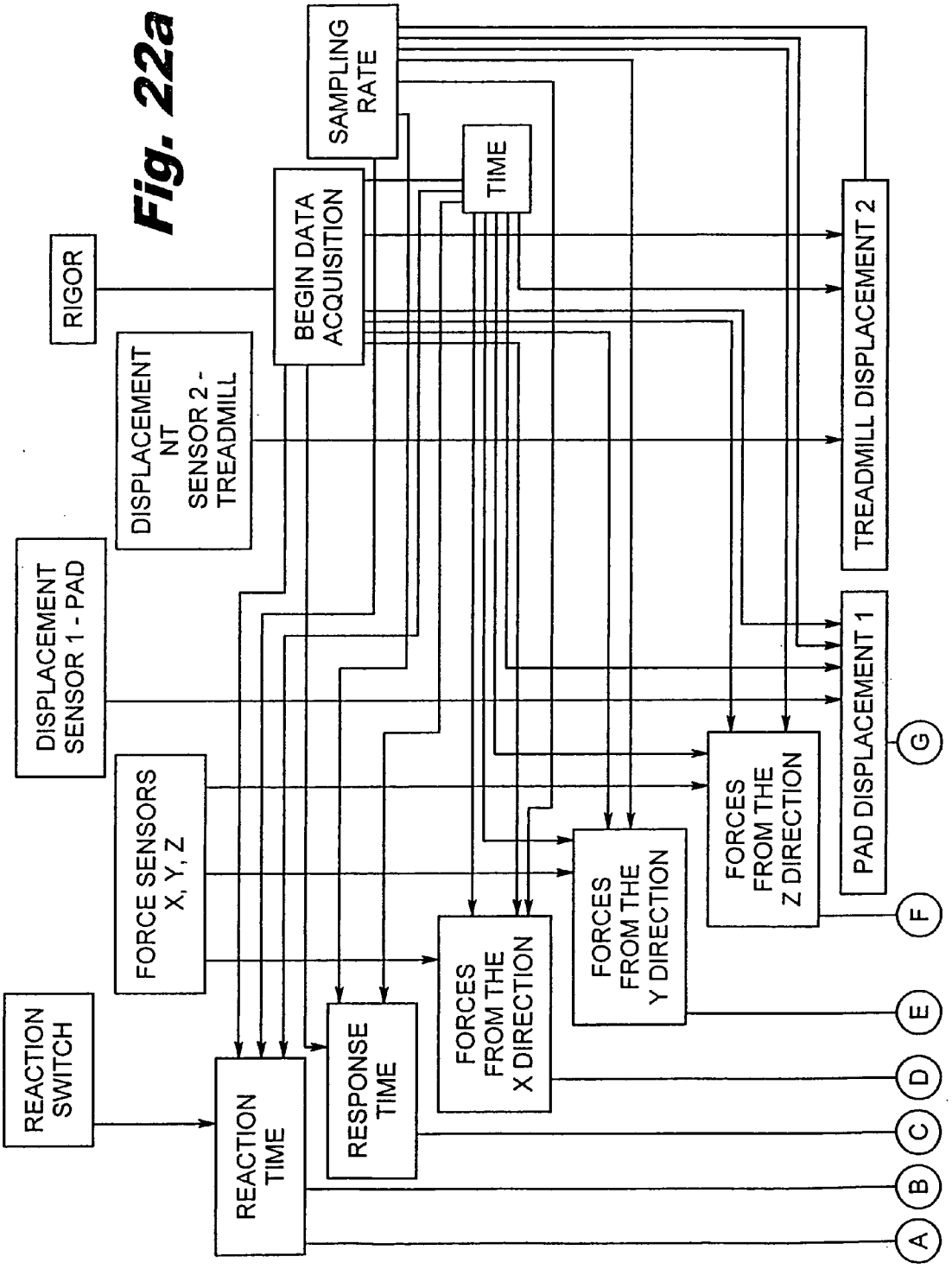
SAMPLING RATE
TIME
BEGIN DATA ACQUISITION
RIGOR
DISPLACEMENT NT SENSOR 2 - TREADMILL
TREADMILL DISPLACEMENT 2
DISPLACEMENT SENSOR 1 - PAD
PAD DISPLACEMENT 1
FORCE SENSORS X, Y, Z
FORCES FROM THE Z DIRECTION
FORCES FROM THE Y DIRECTION
FORCES FROM THE X DIRECTION
REACTION SWITCH
RESPONSE TIME
REACTION TIME
G
F
E
D
C
B
A

Fig. 22b

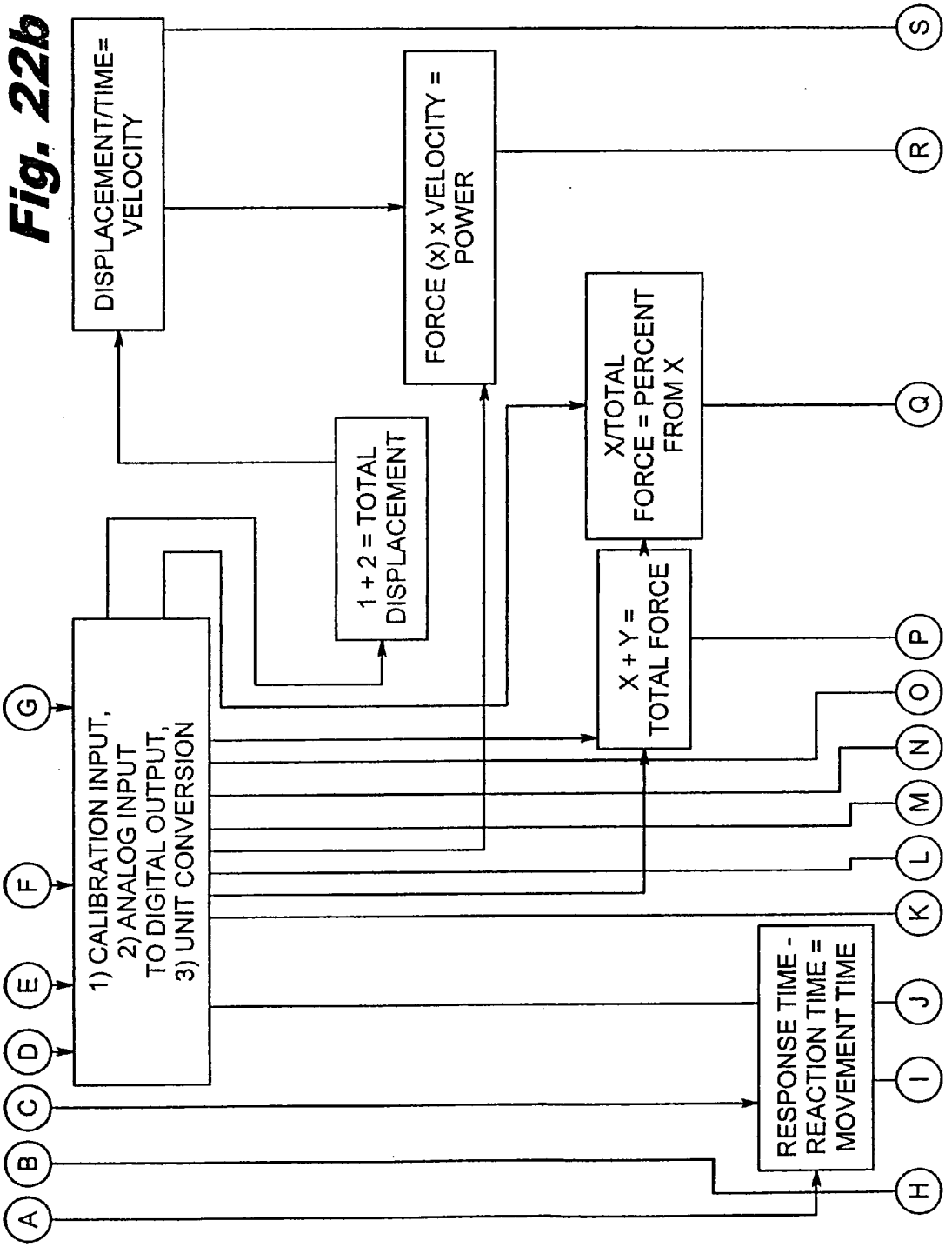
DISPLACEMENT/TIME= VELOCITY
FORCE (x) x VELOCITY = POWER
X/TOTAL FORCE = PERCENT FROM X
1 + 2 = TOTAL DISPLACEMENT
X + Y = TOTAL FORCE
1) CALIBRATION INPUT, 2) ANALOG INPUT TO DIGITAL OUTPUT, 3) UNIT CONVERSION
RESPONSE TIME - REACTION TIME = MOVEMENT TIME
A
B
C
D
E
F
G
H
I
J
K
L
M
N
O
P
Q
R
S

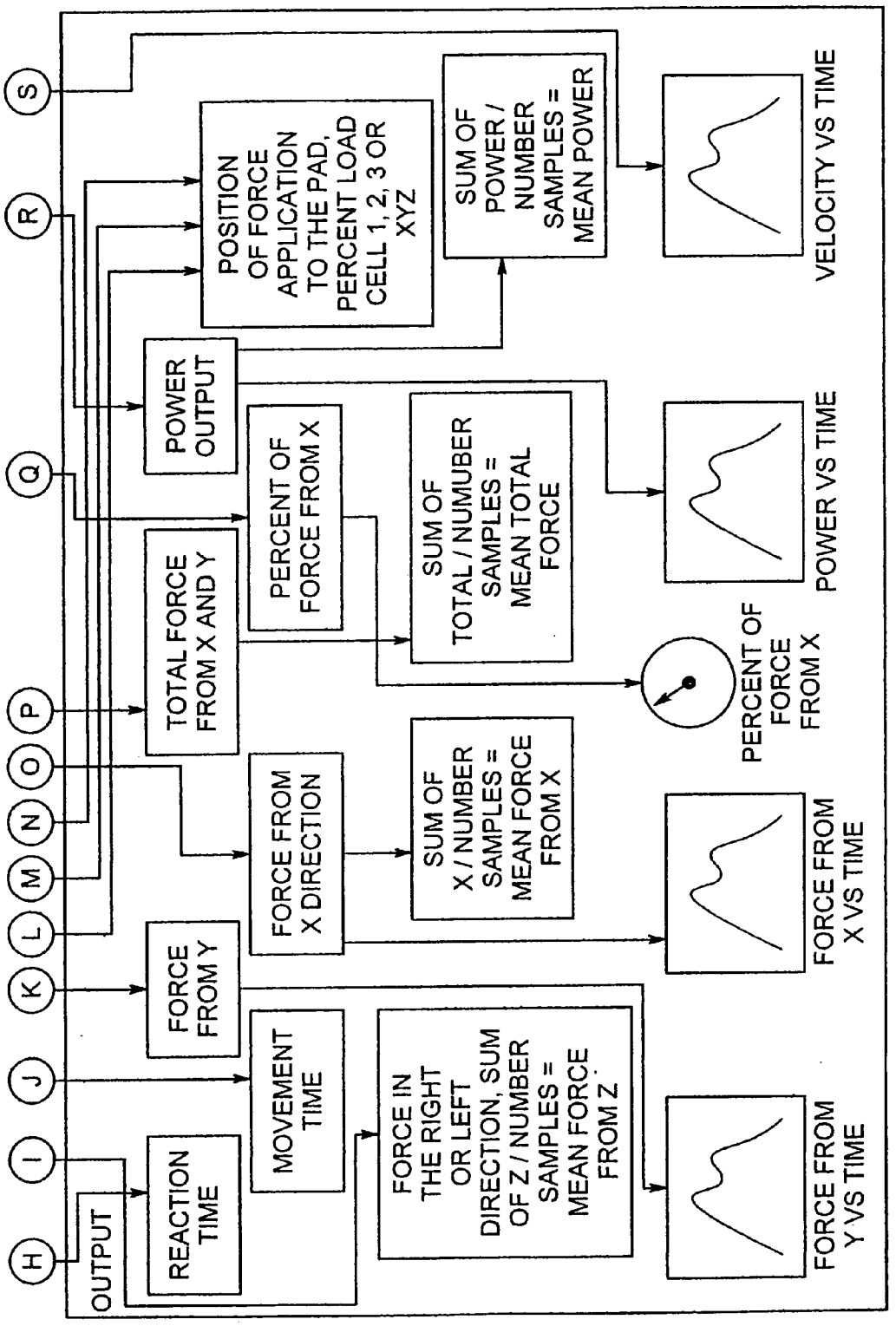
H
I
J
K
L
M
N
O
P
Q
R
S
OUTPUT
REACTION TIME
MOVEMENT TIME
FORCE FROM Y
FORCE FROM X DIRECTION
TOTAL FORCE FROM X AND Y
POWER OUTPUT
PERCENT OF FORCE FROM X
POSITION OF FORCE APPLICATION TO THE PAD, PERCENT LOAD CELL 1, 2, 3 OR XYZ
FORCE IN THE RIGHT OR LEFT DIRECTION, SUM OF Z / NUMBER SAMPLES = MEAN FORCE FROM Z
SUM OF X / NUMBER SAMPLES = MEAN FORCE FROM X
SUM OF TOTAL / NUMUBER SAMPLES = MEAN TOTAL FORCE
SUM OF POWER / NUMBER SAMPLES = MEAN POWER
FORCE FROM Y VS TIME
FORCE FROM X VS TIME
PERCENT OF FORCE FROM X
POWER VS TIME
VELOCITY VS TIME

Fig. 22c

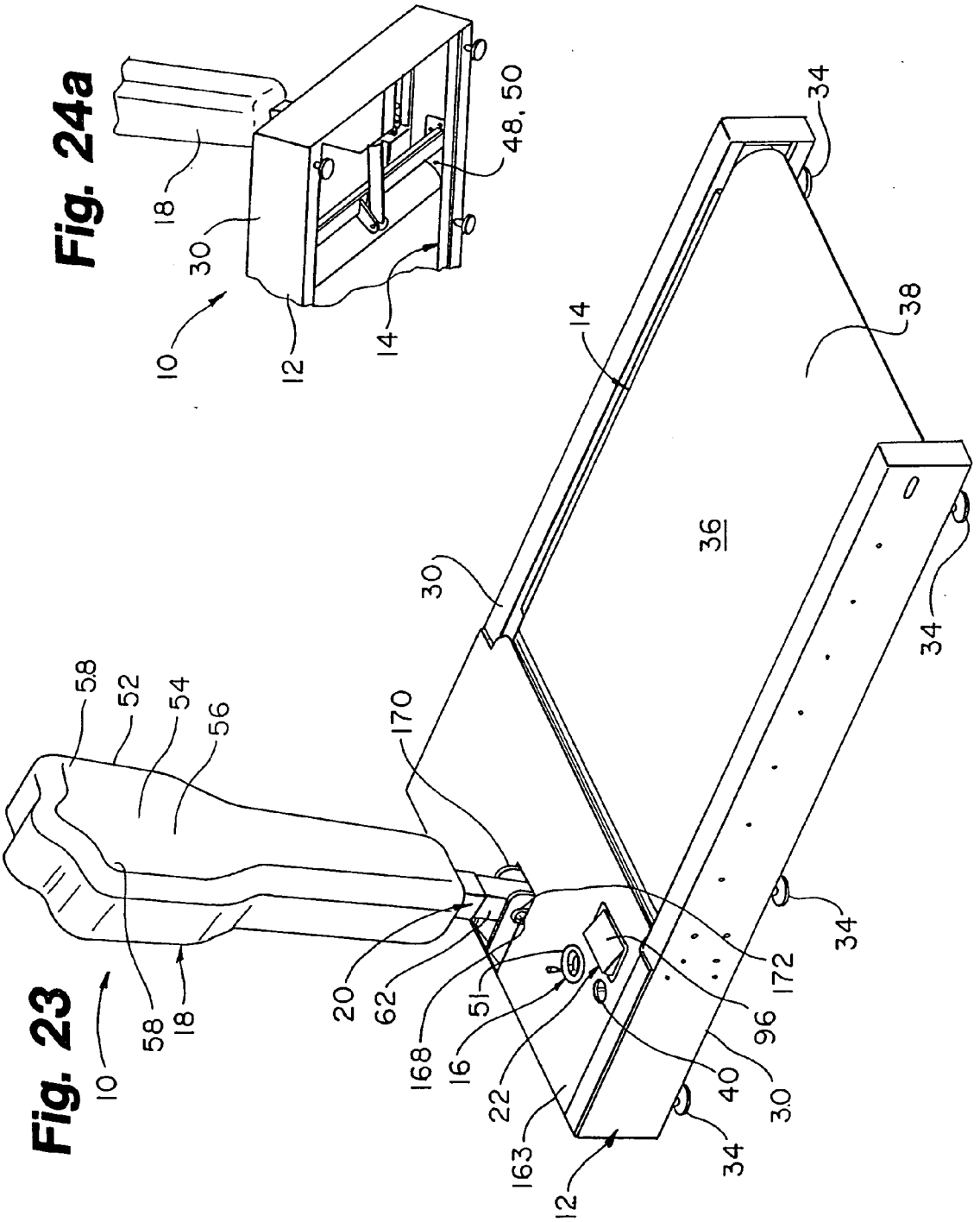

Fig. 24a

Fig. 23

Fig. 24

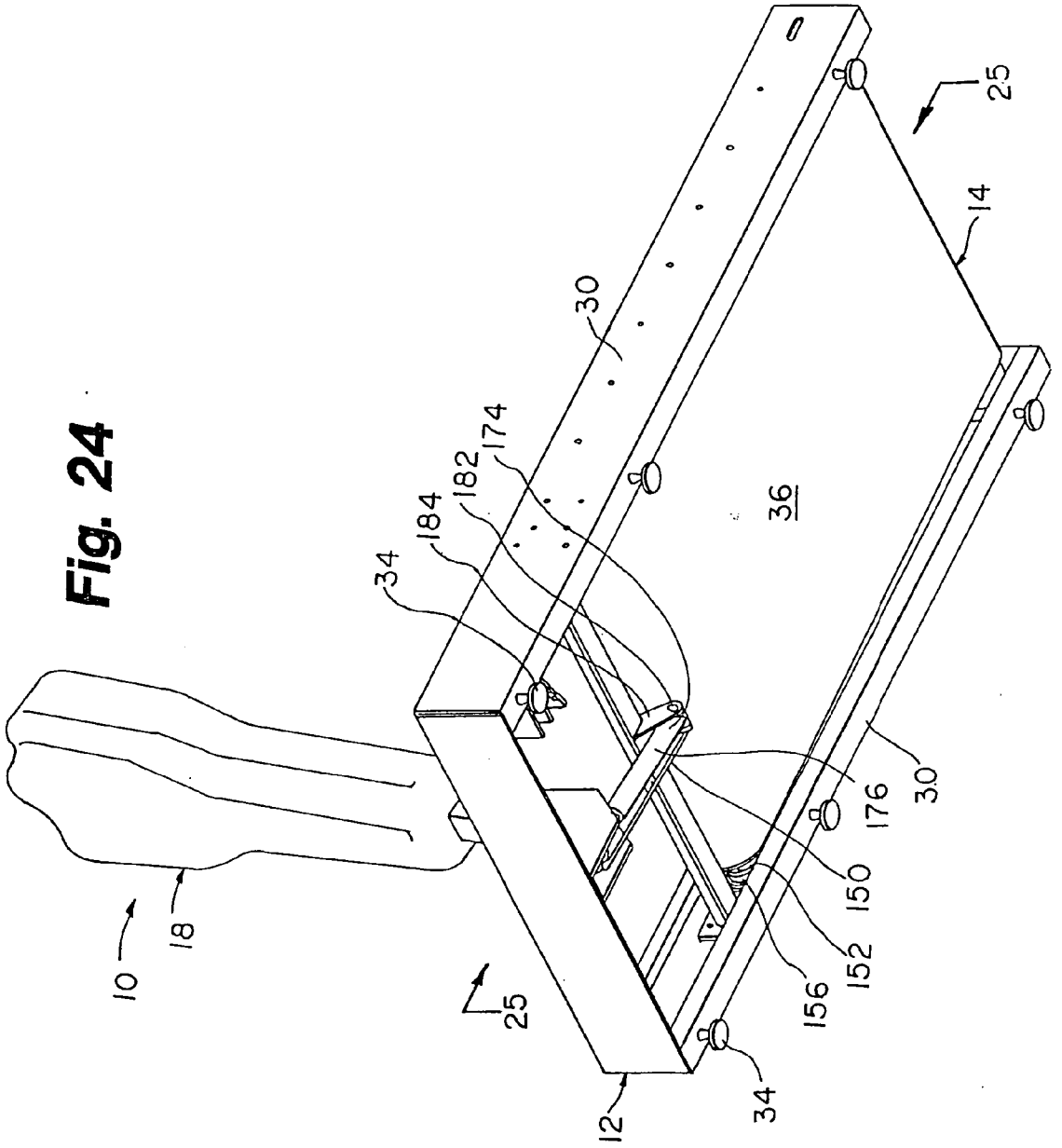

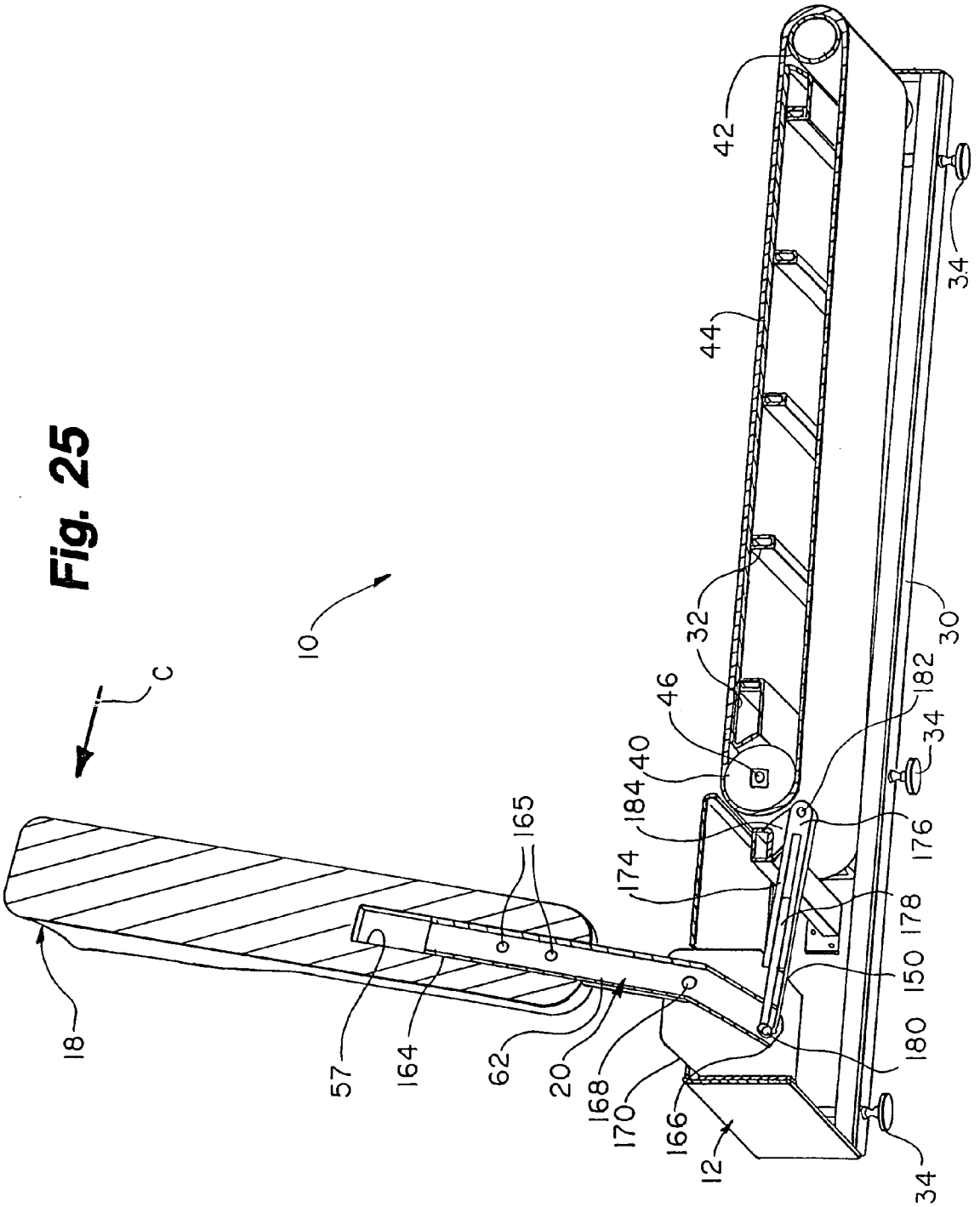
10
C
18
57
164
62
20
168
170
166
12
165
174
184
40
46
32
44
42
34
30
182
34
176
178
150
180
34

Fig. 25

Fig. 26

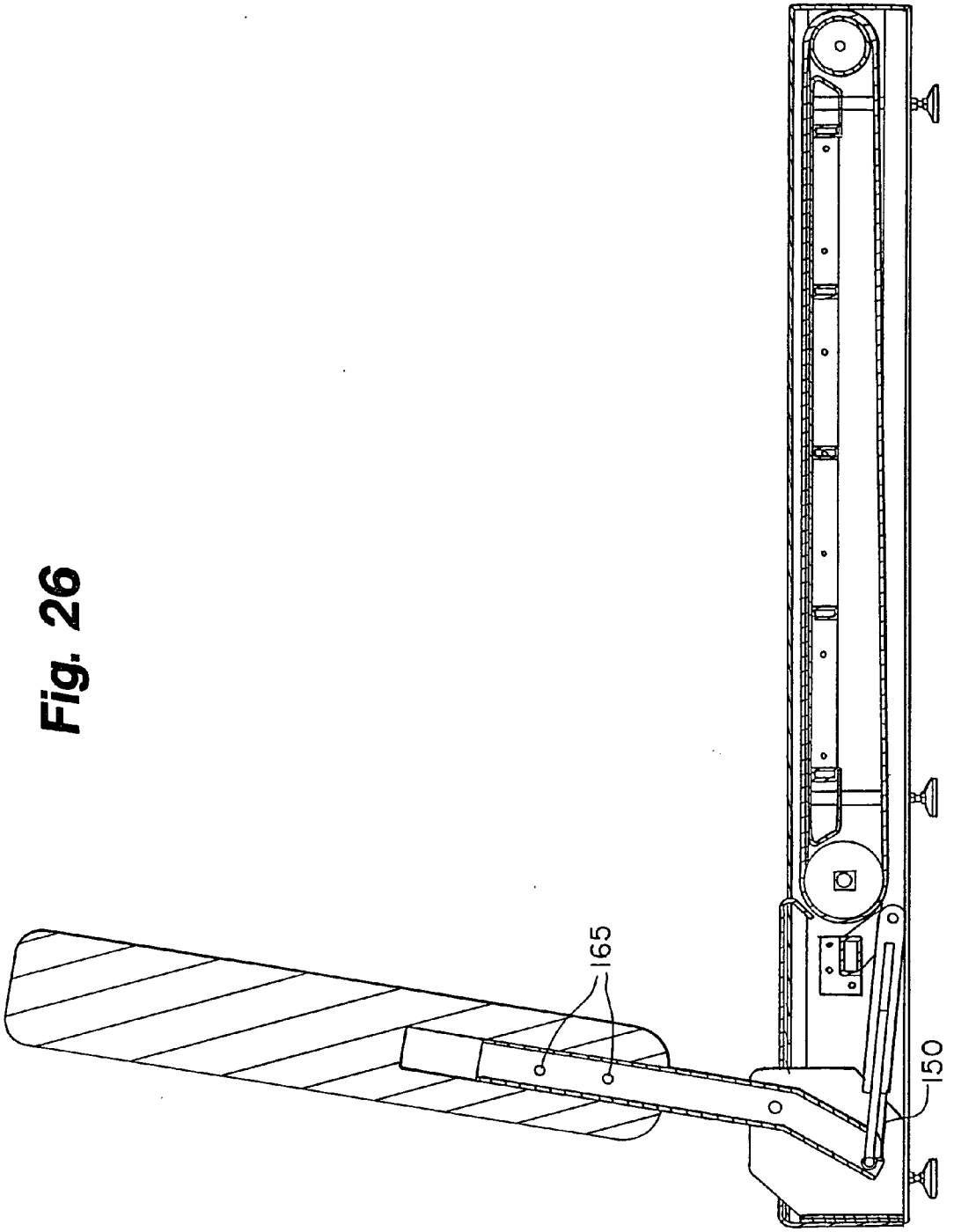

Fig. 27

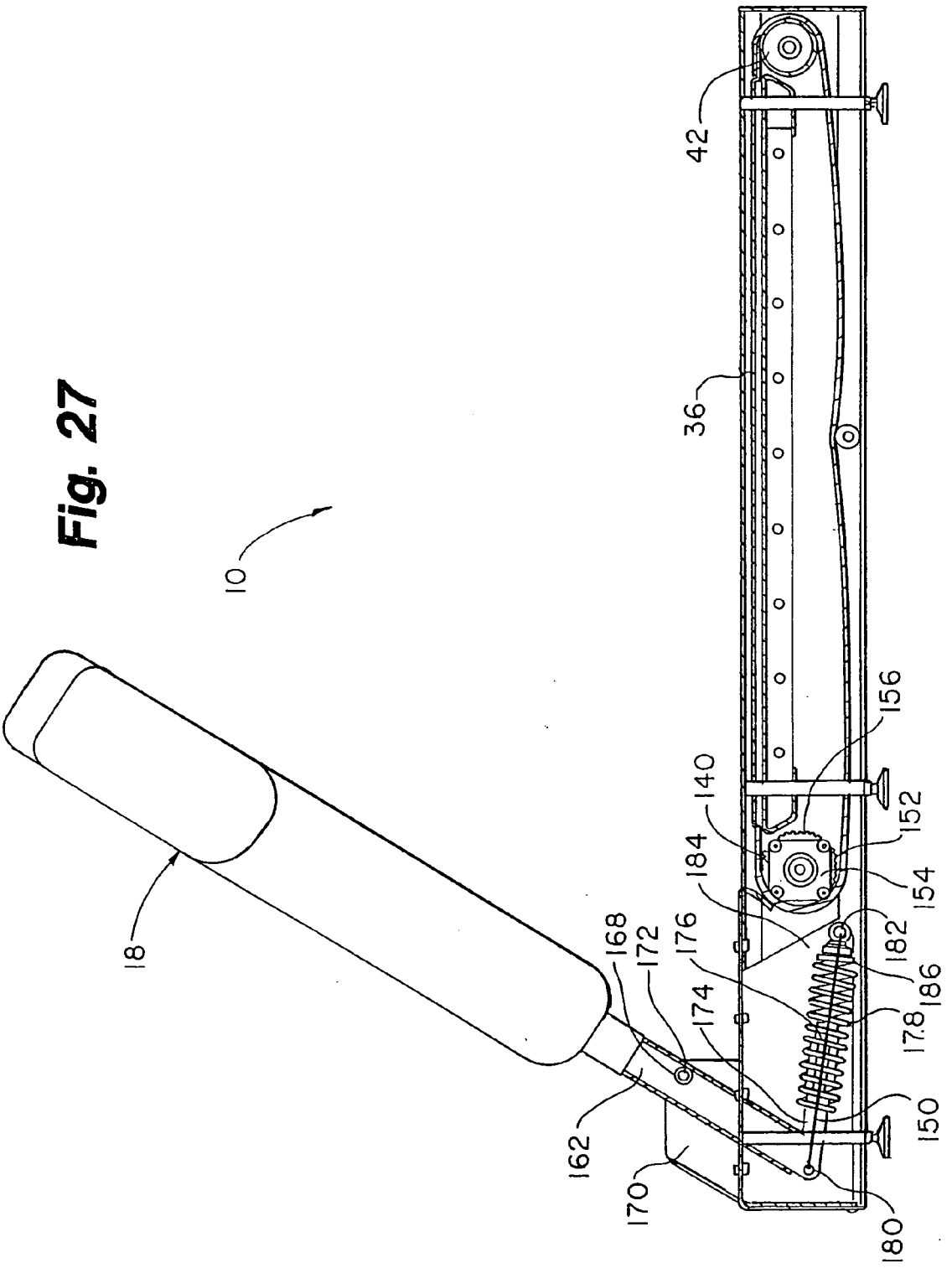
10
18
42
36
156
140
152
184
154
168
172
176
182
174
186
178
162
150
170
180

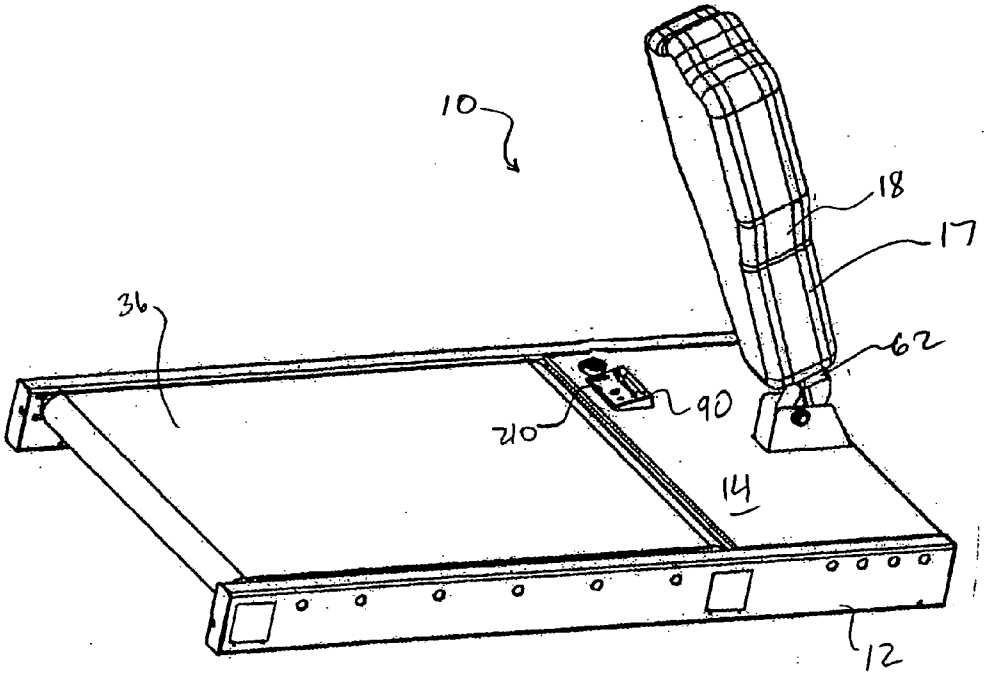

Fig. 27a

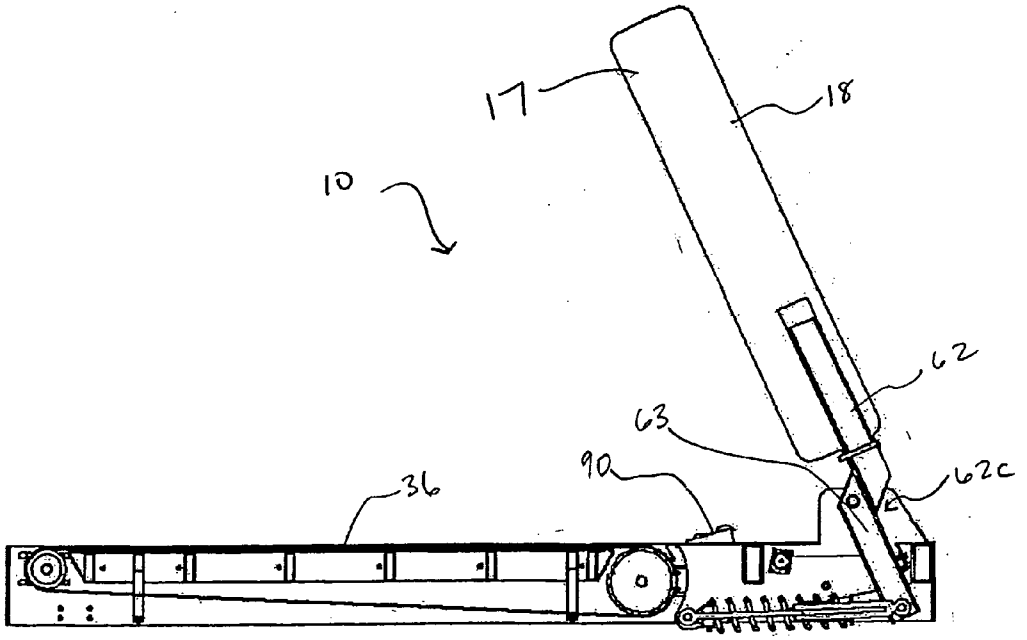

Fig. 28a

Fig. 28

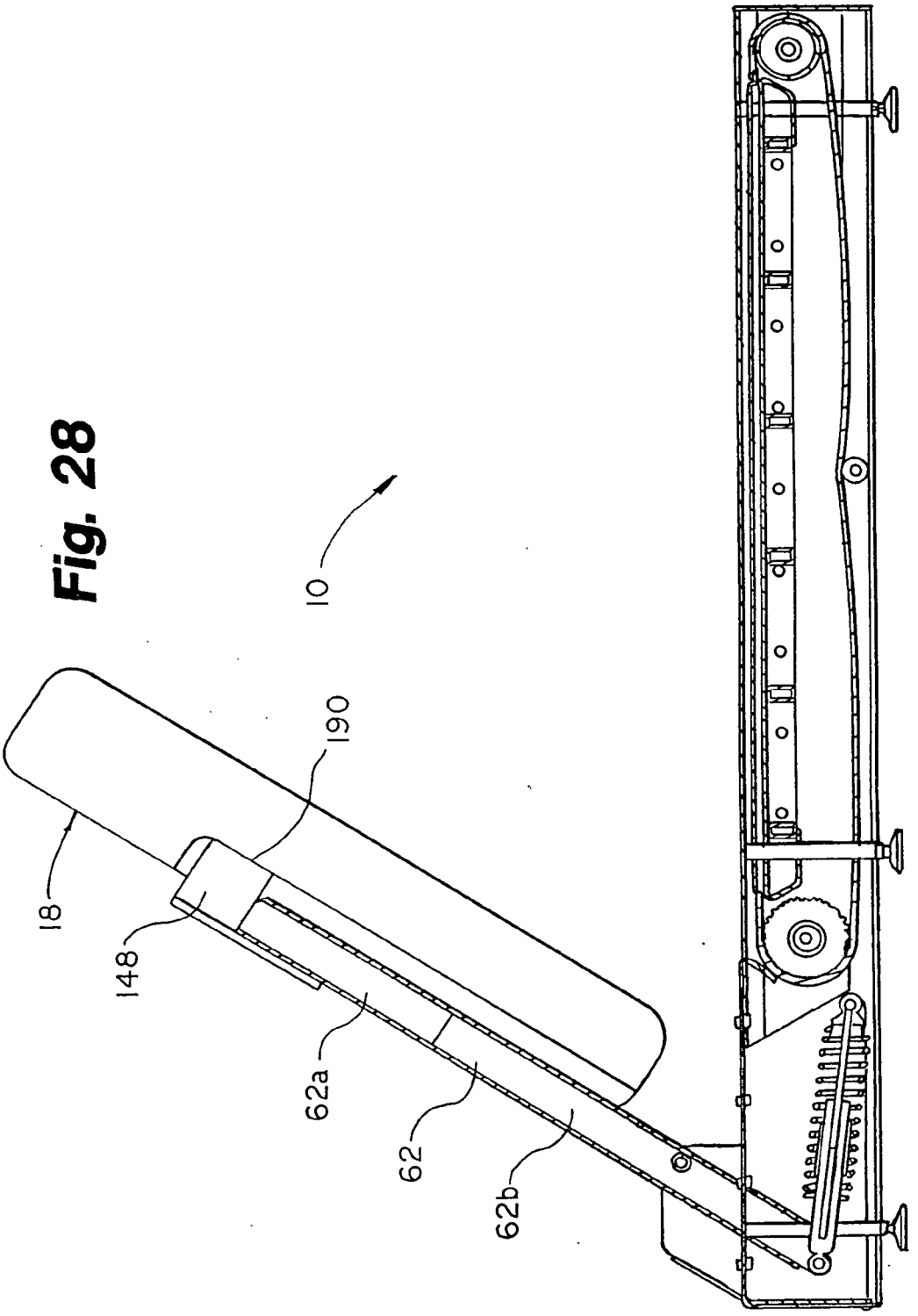

Fig. 29

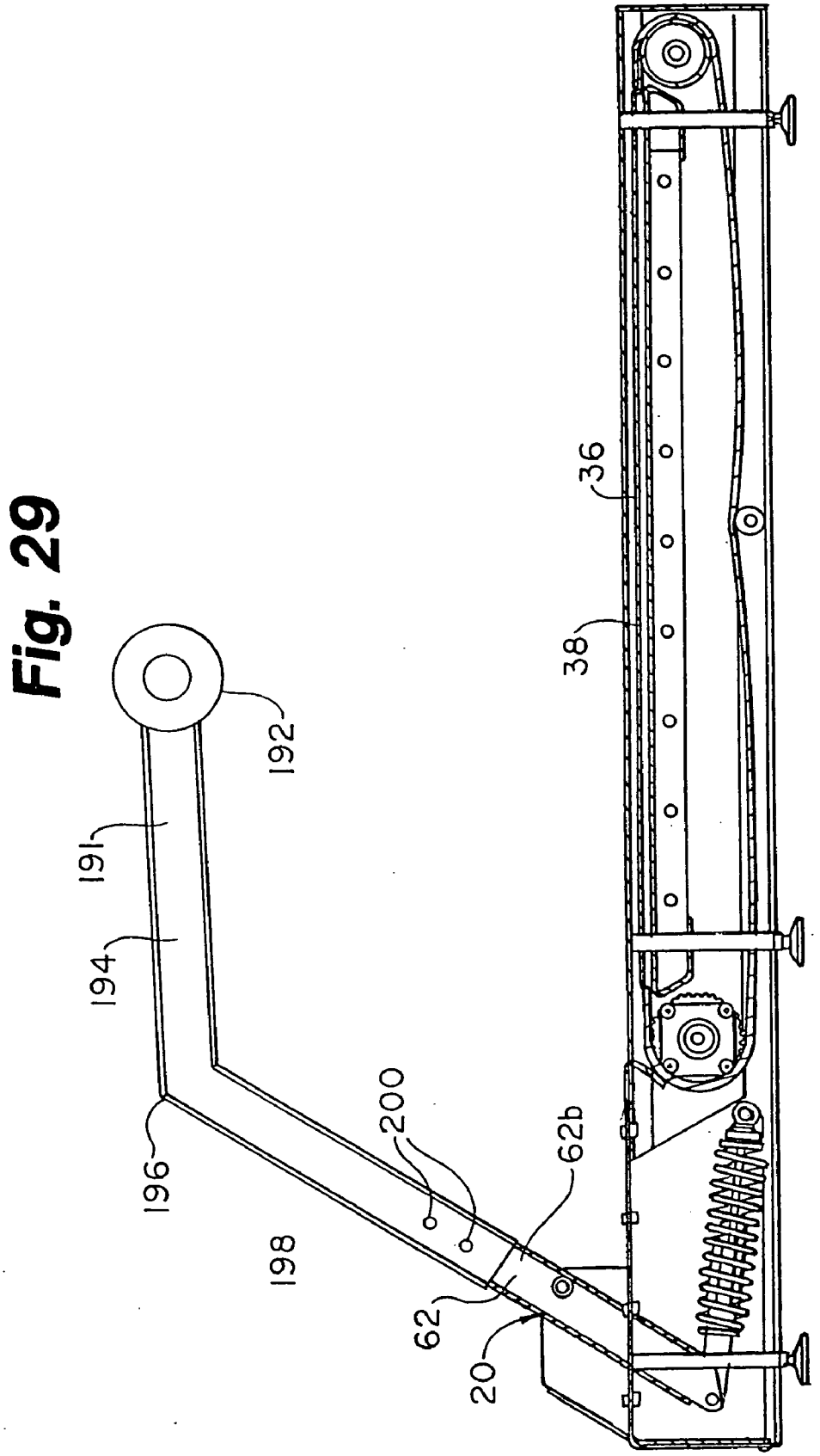

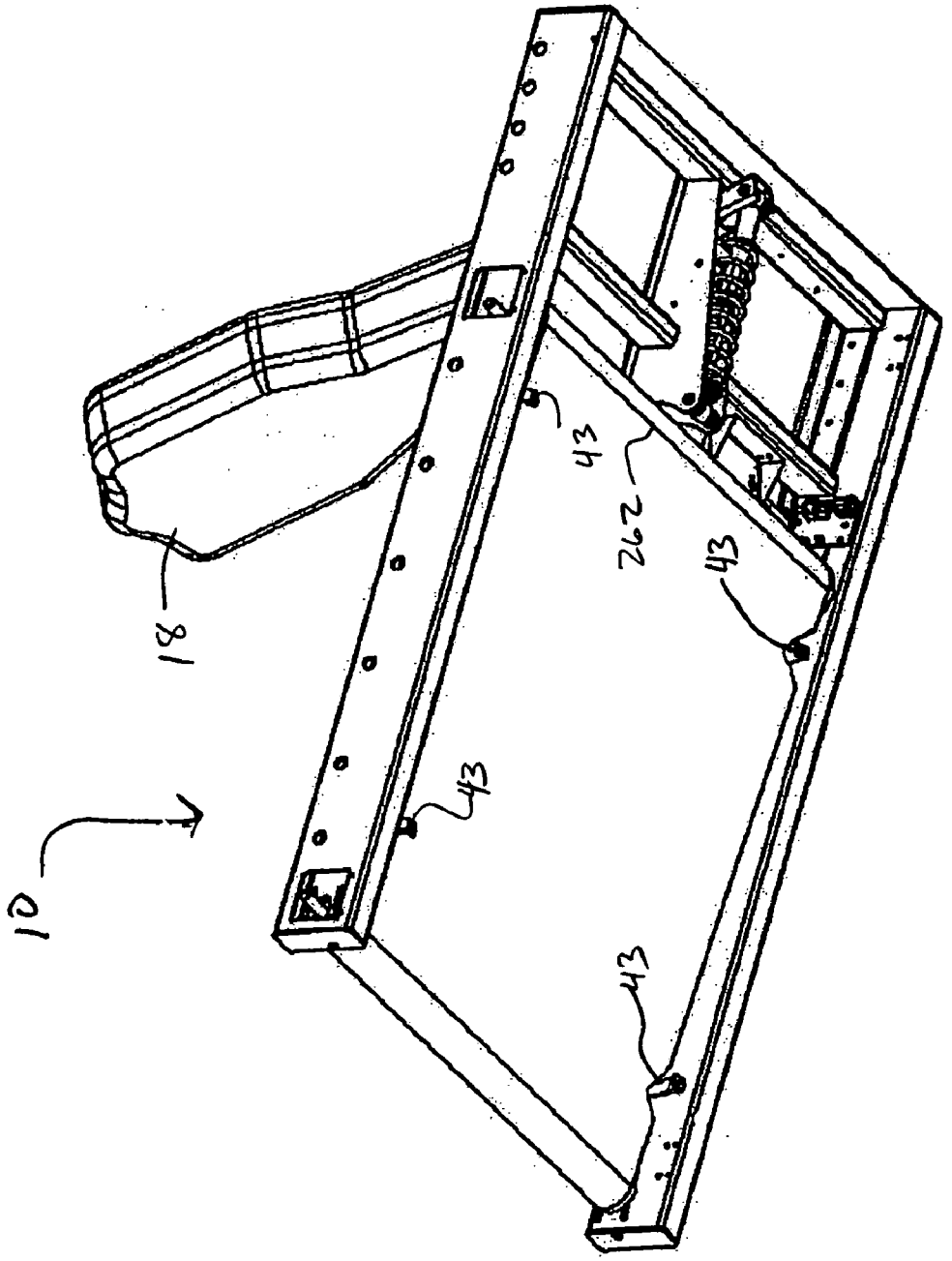

Fig. 30

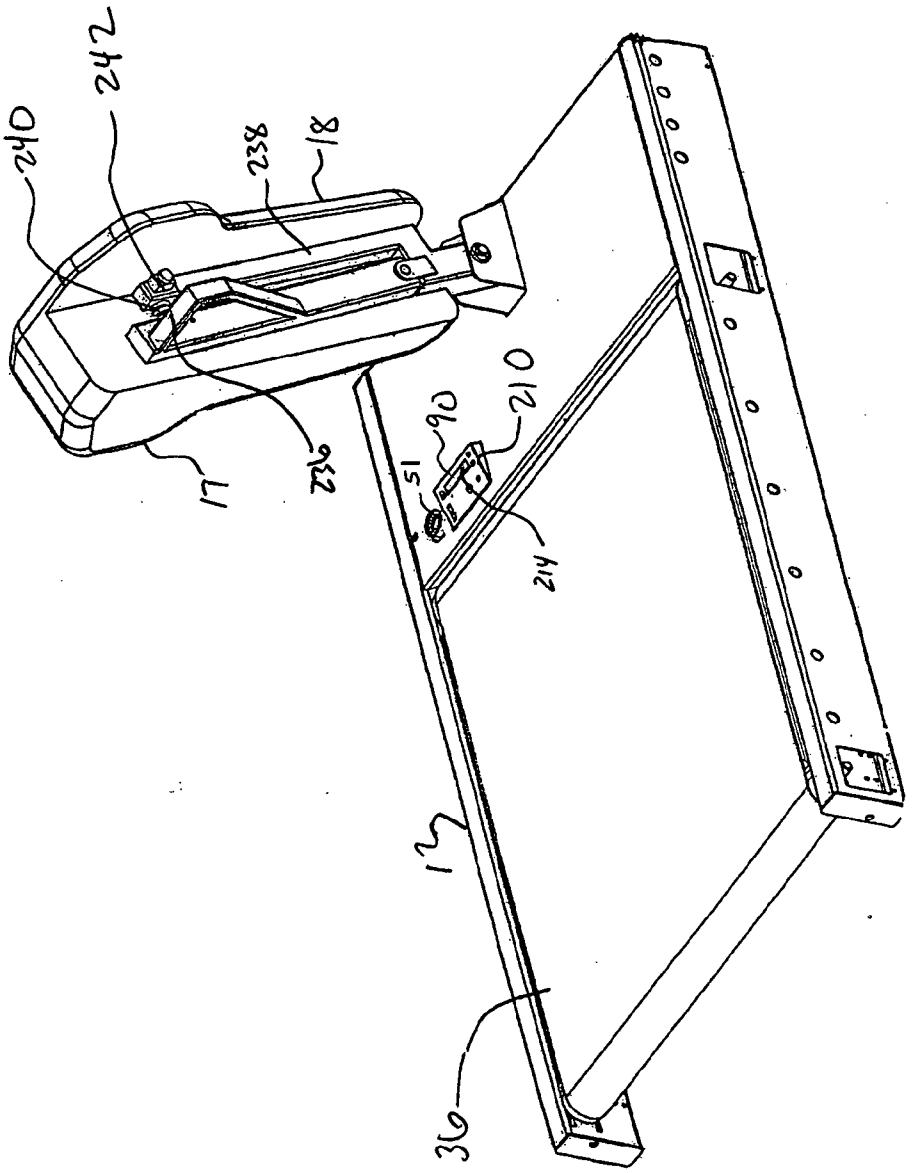

Fig. 31

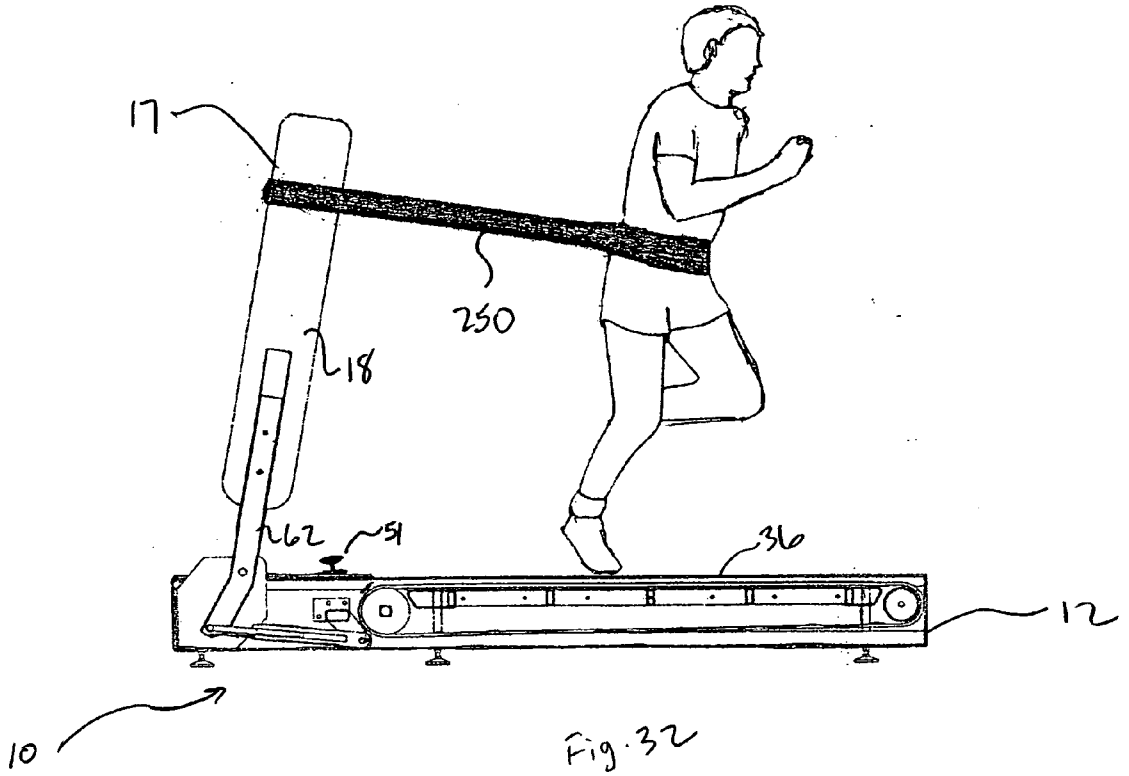

Fig. 32

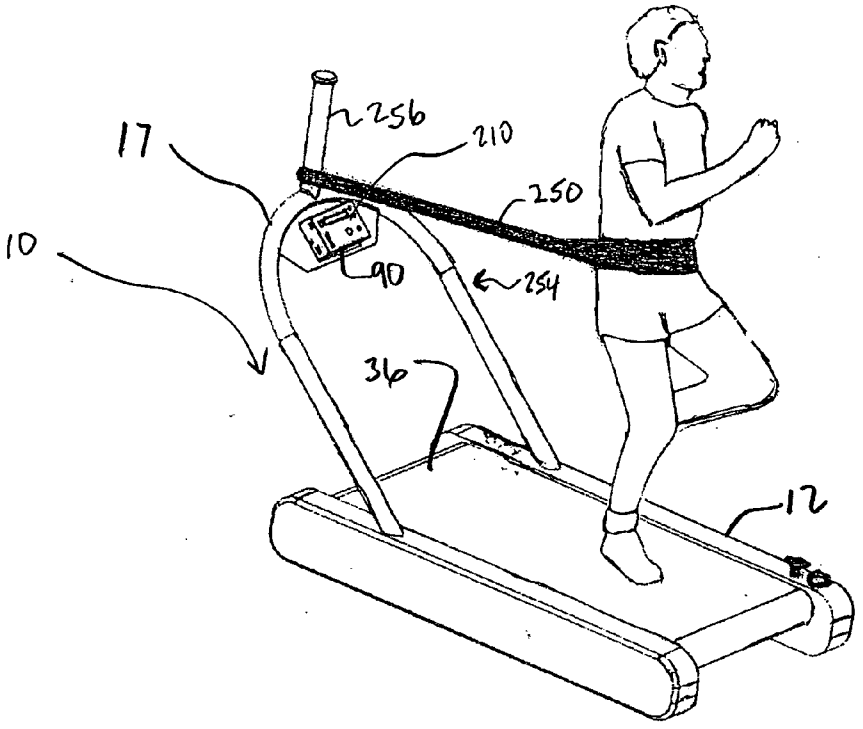

Fig. 33

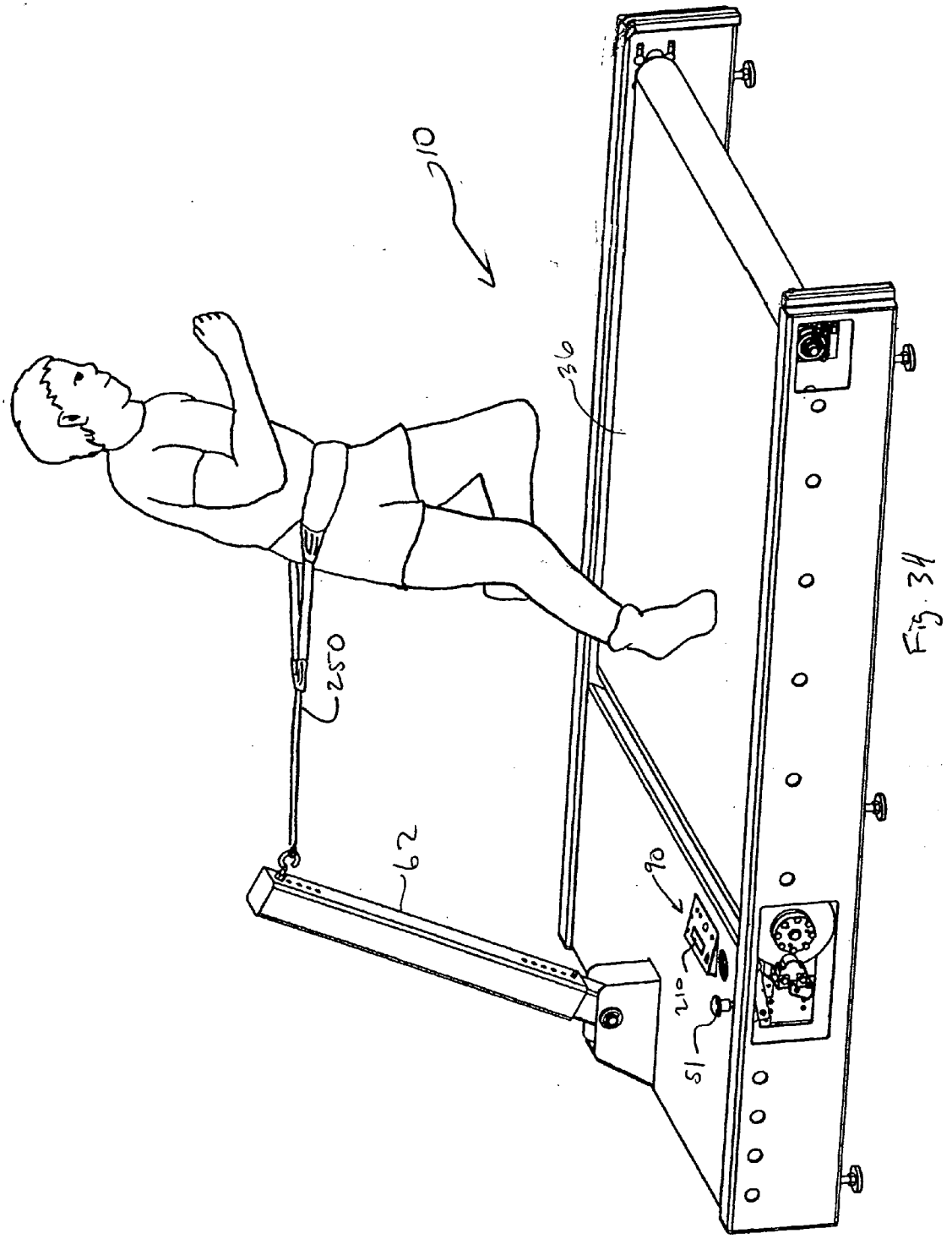

Fig. 34

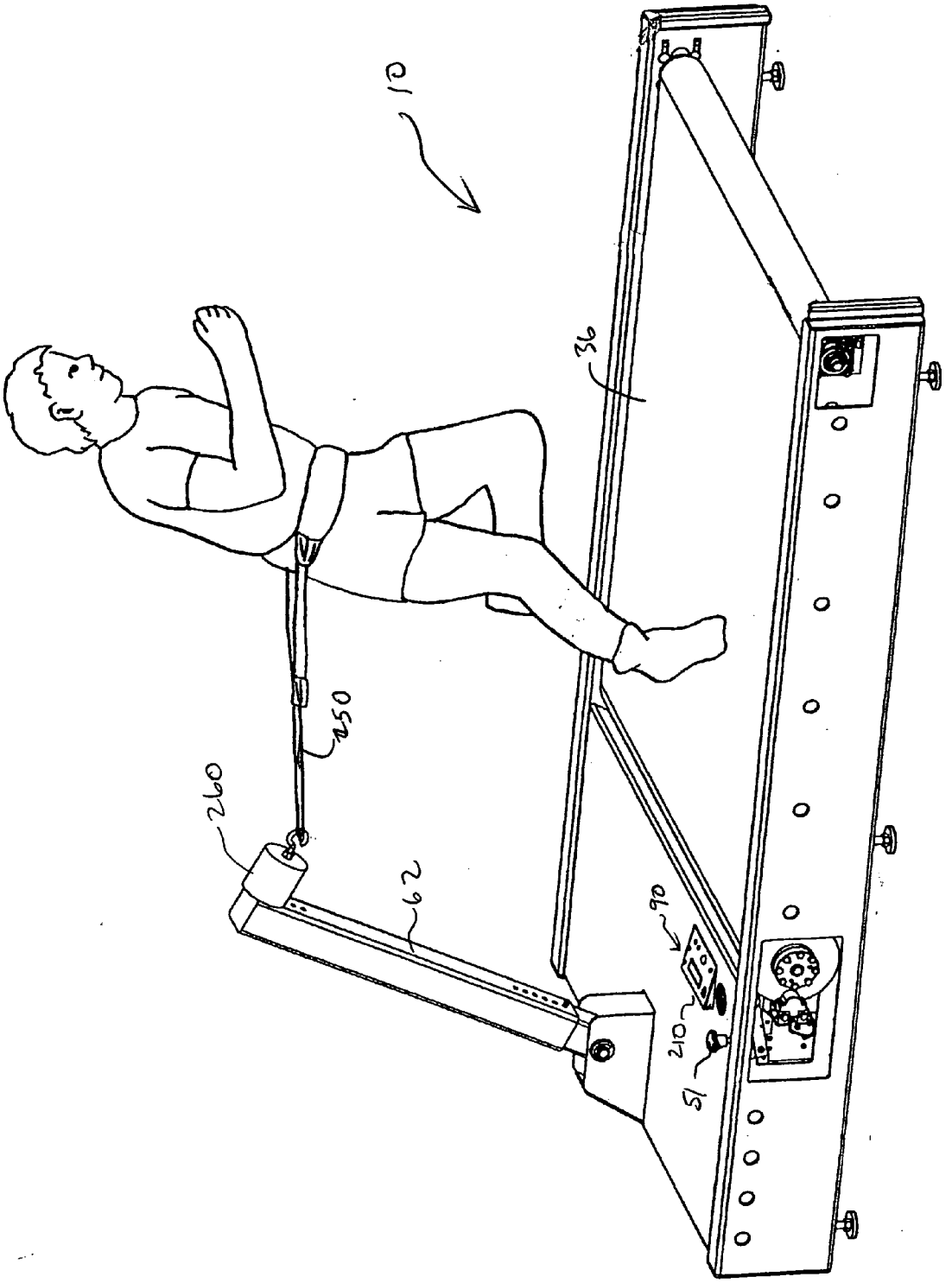

Fig. 35

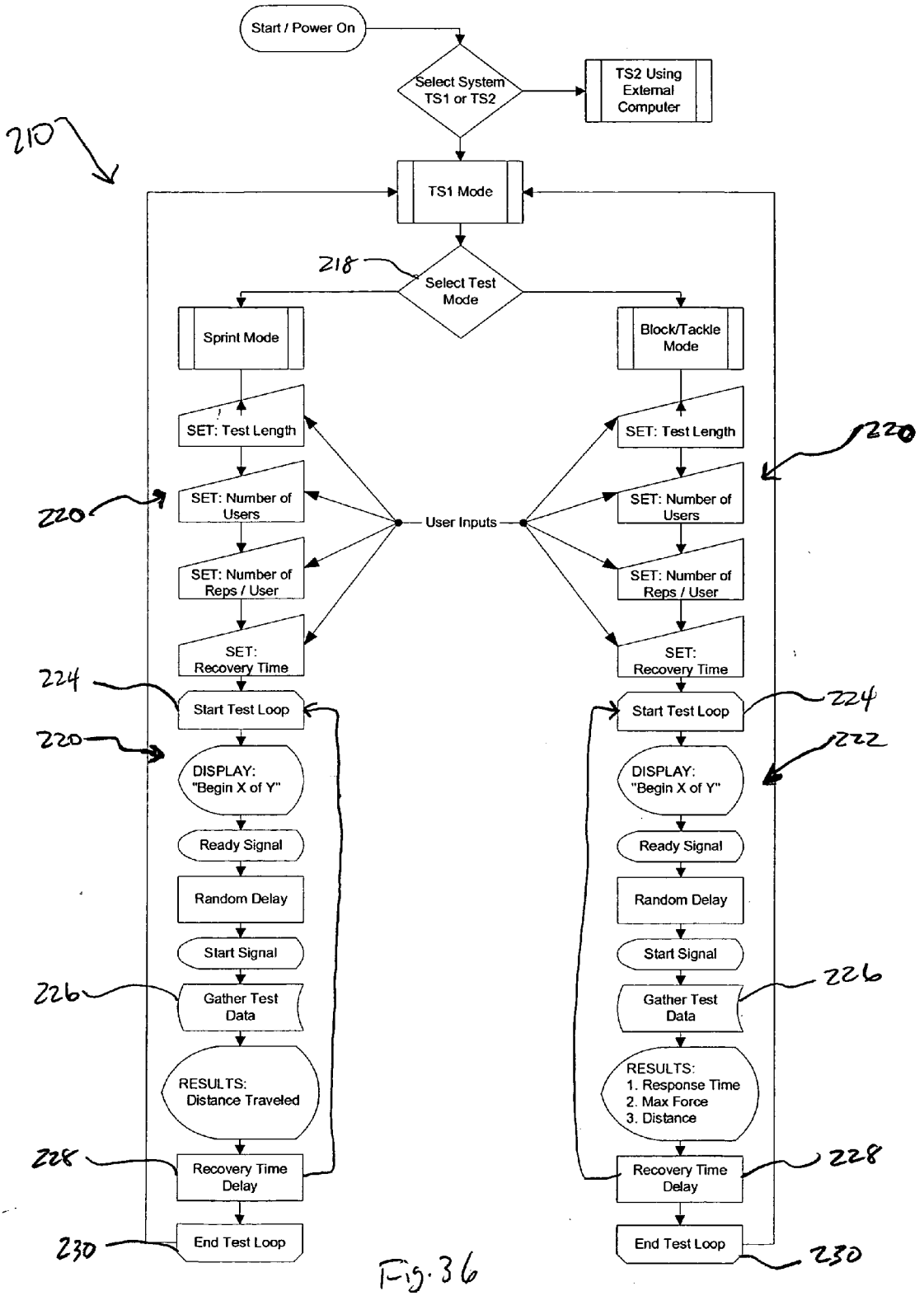
Start / Power On
Select System TS1 or TS2
TS2 Using External Computer
210
TS1 Mode
218
Select Test Mode
Sprint Mode
Block/Tackle Mode
SET: Test Length
SET: Number of Users
SET: Number of Reps / User
SET: Recovery Time
User Inputs
220
224
Start Test Loop
DISPLAY: "Begin X of Y"
222
Ready Signal
Random Delay
Start Signal
226
Gather Test Data
RESULTS: Distance Traveled
RESULTS: 1. Response Time 2. Max Force 3. Distance
228
Recovery Time Delay
230
End Test Loop

Fig. 36

AUTOMATED PHYSICAL TRAINING SYSTEM

RELATED APPLICATIONS

[0001] The present invention is a continuation of co-pending U.S. patent application Ser. No. 10/210,507, filed Aug. 1, 2002, which claims priority to U.S. Provisional Application No. 60/309,316, filed Aug. 1, 2001 and which is a continuation-in-part of U.S. patent application Ser. No. 09/794,775, filed Feb. 27, 2001, now U.S. Pat. No. 6,575,879, which claims priority to U.S. Provisional Patent Application 60/193,316, filed Mar. 30, 2000; each of the referenced Applications are incorporated herein by reference.

TECHNICAL FIELD

[0002] The present invention relates to a method and apparatus for assessing a user athlete. More particularly, the present invention relates to a physical training system employing automatic control, measurement, and assessment of at least one user athlete's performance.

BACKGROUND OF THE INVENTION

Football

[0003] The skills that are important to a successful performance in the game of American football include blocking, charging, tackling, sprinting and pass blocking. Current methods of evaluating these skills include qualitative assessments by coaches while using blocking and tackling sleds on the playing field and quantitative assessments such as the bench press, back squat, power clean and vertical jump in the gymnasium. The coaches' assessments on the playing field are not accurate due to changes in the environment, differences between observers, and the fact that these measurements are purely qualitative, while the quantitative measurements in the gymnasium are not accurate due to their non-specific nature, in that the movements are very different from the skills performed on the playing field. Therefore, it would be beneficial to develop a testing device that could simulate the resistive force of an opposing player, while accurately measuring performance when blocking, charging, tackling and pass blocking. In doing so, it would provide a more precise and reflective measure of an athlete's physical potential on the playing field and provide quantitative information that can be used when making decisions about training.

[0004] Skills that need to be evaluated include:

[0005] 1. Charging. A strategic maneuver used by the defensive team to keep the offensive team from gaining yardage and scoring points. Also, strategic maneuver used by the ball carrier to gain yardage and score points.

[0006] 2. Blocking. A strategic maneuver used by the offensive team to keep the defensive team away from the player carrying the ball.

[0007] 3. Tackling. A strategic maneuver used by the defensive team to keep the offensive ball carrier from gaining yardage and scoring points.

[0008] 4. Pass blocking. A strategic maneuver used by the offensive team to keep the defensive team away from the player passing the ball.

Anaerobic Type Activities

[0009] The physical abilities that are important in anaerobic type sports and other physical jobs such as firefighting and law enforcement include anaerobic strength, power, acceleration, speed, agility, and short term muscular endurance. For sports activities, it is generally necessary to perform off-season training programs such as:

[0010] 1. Task specific activities that improve the above physical abilities.

[0011] 2. Motivational strategies that encourage users to work to the best of their ability by encouraging competition.

[0012] 3. Organizational strategies that are designed to allow users to complete the activities in the shortest period of time—or the most-efficient time period.

[0013] 4. Organizational strategies that allow a large number of users to participate with minimal personnel supervision.

[0014] 5. Training devices that take up very little space in a designated training facility.

[0015] Conventional off-season training methods and techniques include weight lifting, jump training, sprint training, agility training, and the like. Each training regimen often requires extensive training supervision. As such, much of the efficiency and individualistic training focus is lost or even avoided. Limited personnel, unskilled personnel, and cost and time restraints make effective off-season training ineffective. Each training regimen is generally segregated and conducted without looking at the effects to, or an integration with, other training regimens. Further, without the proper implementation and timing for the individual training tasks, athletes are unable to properly focus the workouts in a manner that serves to maximize the individual's needs against the goals of the specific regimen (i.e., timing, strength, jumping, etc.) or the aggregate regimen schedule.

[0016] As a result, an automated physical training system is needed that will address many of the deficiencies present with conventional techniques, systems, and methods of training. Specifically, there is a need to address the present problems with systems that are unable and ill equipped to control the scope and timing of the training sessions. Further, there is a need to address the weaknesses with typical segregated approaches to training such that an automated system can better integrate training programs in a manner that will improve training control, efficiency, and overall athletic assessment.

SUMMARY OF THE INVENTION

[0017] The treadmill sled of the present invention substantially meets the aforementioned needs by providing an automated physical training device with programmable control over the scope and timing of the physical training. Moreover, the present invention provides a system that better serves to integrate and control training sessions over a broad multi-purpose training program.

[0018] In one embodiment, repeatable quantitative results measure charging, blocking, tackling and pass blocking analysis of an athlete. In order to make such analysis, the

treadmill sled of the present invention measures at least some or all of the following parameters:

[0019] 1. Direction of force application.

[0020] 2. Position of force application.

[0021] 3. Instantaneous magnitude of force.

[0022] 4. Displacement of the treadmill and the spring compensated blocking dummy.

[0023] 5. Instantaneous magnitude of power output (force times distance divided by time).

[0024] 6. Reaction time (the duration of time between the stimulus and the player movement).

[0025] 7. Movement time (the duration of time between the player's movement and contact with an opposing object).

[0026] There is a certain rationale for measuring the above-noted quantities. With respect to the direction of force application, it is noted that when blocking, charging and pass blocking, it is advantageous to apply force in a horizontal direction (X) in the horizontal (X, Y) plane. Any force in the vertical direction (Z) will not contribute to moving the opposing player backward. Therefore, measuring the direction of the force application will determine whether changes need to be made to the block, charge, or pass blocking technique of the athlete to increase the force applied in the X direction. In addition, the force applied by the right and left hands of the athlete (such force having a component in the Y direction) may provide information about left or right dominance by either side. A weakness in one side may provide the opponent with an advantage. Measuring the amplitude of left and right force production (such force production having a component in the Y direction) will identify these weaknesses so that adjustments can be made during training of the athlete.

[0027] With respect to the measurement of position of force application, it is advantageous to apply force in the center of an opponent's mass while blocking, charging, and pass blocking. If a block or charge is applied too high on the opponent, the opponent may duck below the attempted force application and avoid being moved in the desired direction. In addition, the higher the position of force application, the greater percentage of the forces will be applied in the vertical (Z) direction as a result of the body's angle. On tackling an opposing player, it is advantageous to apply force below the center of the opponent's mass. This causes the opposing player to rotate around the player's center of mass and potentially fall to the ground. Measuring the position of force application identifies errors while performing the force application so that adjustments can be made during the athlete's training.

[0028] With respect to measuring instantaneous magnitude of force, it is advantageous to apply maximal forces through the duration of the block, charge, pass block and tackle. If the applied forces are reduced at any time, the opponent may be able to resist or avoid being moved in the desired direction. Measuring the magnitude of the force application identifies fluctuations while performing the particular maneuver so that adjustments can be made to the skill of the athlete during training.

[0029] An embodiment of the treadmill sled of the present invention further measures displacement of the treadmill and the spring compensated pad. In an isotonic mode, the belt of the treadmill and the spring of the pad mount are displaced by the forces applied by the feet and hands of the athlete. The rate at which the belt and pad are displaced depends on the amount of the opposing force provided by the treadmill braking system and the spring. Further, the amplitude and frequency of the force applied by the athlete's lever system further affects the rate. It is advantageous to displace the belt on the spring the greatest distance in the shortest period of time. The treadmill provides unlimited distance for which to block, charge, pass block or tackle. As a result, an athlete can be tested for short distances or long distances depending on the distances normally covered on the playing field.

[0030] A further measurement is the instantaneous magnitude of power output. It is advantageous to produce large and consistent power outputs while blocking, tackling, pass blocking and charging opposing players. Functional power during these skills is recorded as product of force in the X direction and displacement of the treadmill belt and blocking pad, divided by the time of execution. The amplitude of this power throughout the duration of the maneuver provides values such as impact power, maximum power, minimum power, and reduction in power from the maximum value over the time of the maneuver. These measurements are valuable in determining those athletes who are successful in these skills as opposed to those who are not so that adjustments may be made to improve certain aspects of a particular athlete's skills during training. Total power during these maneuvers is recorded as a product of force in all directions, displacement of both the treadmill and the blocking pad, divided by the time of execution of the maneuver. By measuring this quantity, the efficiency of the athlete's skill can be calculated. Efficiency is the product of functional power divided by the total power.

[0031] The device of the present invention further measures reaction time. It is advantageous to begin movement toward an opposing player in the shortest amount of time possible after the auditory or visual stimulus indicating initiation of contact. Players with shorter reaction times potentially make contact with their opponents at higher velocities, thereby resulting in greater power outputs directed to the opponent.

[0032] Additionally, it is desirable to measure movement time. It is advantageous to cover greater distances in shorter periods of time before making contact with the opponent while blocking, charging, and tackling. Players with shorter movement times potentially make contact with an opponent at higher velocities resulting in greater power outputs. Deficiencies noted in movement time can be corrected through changes in the skill technique of the player and in practicing the skill.

[0033] The present invention is a system for automatically controlling and assessing a user athlete's physical training prowess at certain athletic skills. An apparatus of the present invention can be a treadmill sled having a frame, a rotatable continuous belt mounted on the frame, the belt presenting an upward directed support surface for supporting a user athlete, a training apparatus supported proximate the continuous belt and being operably coupled to the frame, and a performance measuring system. In one embodiment, the

training apparatus can be in the form of a blocking dummy operably coupled to the frame with a dummy support. In another embodiment, the training apparatus can be a support beam system to facilitate securement of a looped tether strap support. Further, the performance measuring system can include programmable and automated control of the timing, duration, and scope/level of the physical training, to present quantitative assessment feedback to better maximize the applicable training regimen, and to simplify the training sessions for supervisory personnel as well as the participating athlete(s). Various modes, such as blocking/tackling and sprinting, are selected and repetitions, start sequences, and resting periods are allocated and controlled to provide for a user-unique training session. Feedback and assessment data can be made available as display or storage output signals for review at the system, for inputting into other systems, or for supervisory monitoring at remote locations.

[0034] Sprinting embodiments of the present invention can include a looped tether strap removably securable and capable of looping around a user athlete to restrict the forward movement of the athlete during a sprint training regimen. The end of the tether strap opposite the user athlete receiving end is securable around the blocking dummy. Alternatively, the strap can be fastened to a modified treadmill sled having a strap support beam system. In each embodiment, the user initiates and advances simulated sprinting on the belt. The automated control and assessment system controls the timing, and provides feedback data such as distance traveled.

BRIEF DESCRIPTION OF THE DRAWINGS

[0035] FIG. **1** is a perspective view of a first embodiment of the blocking sled of the present invention;

[0036] FIG. **2** is a top plan form view of the blocking sled;

[0037] FIG. **3** is an elevational view of the blocking sled looking toward the contact surface of the blocking dummy;

[0038] FIG. **4** is a side elevational view of the blocking sled;

[0039] FIG. **5** is a side prospective view of common attachment points taken along the circle **5-5** of FIG. **4**;

[0040] FIG. **6** is a bottom plan form view of the blocking sled;

[0041] FIG. **7** is a bottom plan form of the belt tension adjustment as depicted in the circle **7-7** of FIG. **6**;

[0042] FIG. **8** is a bottom plan form view of the belt brake as depicted in the circle **8-8** of FIG. **6**;

[0043] FIG. **9** is a perspective view of a second embodiment of the blocking sled of the present invention;

[0044] FIG. **10** is a perspective view of a third embodiment of the present invention;

[0045] FIG. **11** is a top plan form view of the embodiment of FIG. **10**;

[0046] FIG. **12** is an end elevational view taken facing the blocking surface of the blocking dummy;

[0047] FIG. **13** is a side elevational view of the embodiment of FIG. **10**;

[0048] FIG. **14** is a side elevational view taken along the circle **14-14** of FIG. **13**;

[0049] FIG. **15** is a perspective view of a fourth embodiment of the present invention;

[0050] FIG. **16** is a top plan form view of the embodiment of FIG. **15**;

[0051] FIG. **17** is a side elevational view of the embodiment of FIG. **15**;

[0052] FIG. **18** is a bottom plan form view of the embodiment of FIG. **15**;

[0053] FIG. **19** is a bottom plan form view of the motor and drive assembly taken along circle **19-19** of FIG. **18**;

[0054] FIG. **20** is a perspective view of the embodiment of FIG. **15**;

[0055] FIG. **21** is a side elevational view with components broken away to reveal the treadmill and drive components;

[0056] FIGS. **22***a*-**22***c* are schematic diagrams of the program implemented on the embodiment of FIGS. **15** and **23**;

[0057] FIG. **23** is a perspective view of a further embodiment of the present invention;

[0058] FIG. **24** is a bottom perspective view of the embodiment of FIG. **23**;

[0059] FIG. **24***a* is a fragmentary bottom perspective view of a portion of the embodiment of FIG. **23**;

[0060] FIG. **25** is a perspective sectional view taken along the section line **25-25** of FIG. **24**;

[0061] FIG. **26** is a sectional view taken along the section line **25-25** of FIG. **24**;

[0062] FIG. **27** is a sectional side view of another embodiment of the present invention;

[0063] FIG. **27***a* is a perspective view of another embodiment of the present invention;

[0064] FIG. **28** is a sectional side view of the embodiment of FIG. **27** wherein the blocking dummy is mounted on a load cell;

[0065] FIG. **28***a* is a sectional side view of another embodiment of the present invention;

[0066] FIG. **29** is a sectional side view of the embodiment of FIG. **27** having a pad for resistive running;

[0067] FIG. **30** is a perspective view of the underside of an embodiment of the present invention;

[0068] FIG. **31** is a perspective view of an embodiment of the present invention;

[0069] FIG. **32** is a perspective view of an embodiment of the present invention for sprint training;

[0070] FIG. **33** is a perspective view of an embodiment of the present invention for sprint training;

[0071] FIG. **34** is a perspective view of an embodiment of the present invention for sprint training;

[0072] FIG. **35** is a perspective view of an embodiment of the present invention for sprint training; and

[0073] FIG. **36** is a schematic diagram of the program for an embodiment of the automated control and assessment system in accordance with the present invention.

DETAILED DESCRIPTION OF THE DRAWINGS

[0074] The treadmill sled of the present invention is shown generally at **10**. In each of the embodiments, the treadmill sled **10** generally includes the following major components:

[0075] A frame **12**, a treadmill **14**, a treadmill control system **16**, a training apparatus **17**, and a performance measurement system **22**. The training apparatus **17** can take the shape of a blocking dummy **18** attached to the frame **12** by a dummy support **20**, as described herein. In at least one embodiment, the training apparatus **17** can take the shape of a tether support frame system, as described herein. As will be described further, preferred embodiments of the performance measurement system **22** will include an automated control and assessment system **210**. In each of the relevant embodiments of the treadmill sled **10**, common components will be referred to with like numerals.

[0076] A first embodiment of the treadmill sled **10** is depicted in FIGS. **1-8**. The frame **12** of the treadmill sled **10** has a pair of spaced apart, generally parallel side supports **30** that extend from the front to the rear of the treadmill sled **10**. The side supports **30** are fixedly coupled together by a plurality of lateral supports **32** that extend between the two spaced apart sides supports **30** and are fixedly coupled thereto. A plurality of downward directed pads **34** are provided at the lower margin of the side supports **30** for engaging the surface on which the treadmill sled **10** is supported. The pads **34** are most useful when the treadmill sled **10** is disposed within a building and resting on a floor as distinct from being positioned on a practice field on a soil or other underlying surface.

[0077] The treadmill **14** of the treadmill sled **10** includes a continuous belt **36**. The continuous belt **36** has an upward directed support surface **38** as depicted in FIGS. **1** and **2**. The support surface **38** is directed downward on the return leg of the continuous belt **36** as viewed from the underside of the treadmill sled **10** in the depiction of FIG. **6**.

[0078] The continuous belt **36** is supported at least on a first roller **40** and a spaced apart second roller **42**. Each of the rollers **40**, **42** is supported on a roller axle **46**, the roller axle **46** being borne in suitable bushings and being operably coupled to the respective side supports **30**. An underlayment support **44** may be positioned immediately beneath the underside of the advancing portion of the continuous belt **36** to assist in supporting an athlete on the continuous belt **36**. In practice, the continuous belt **36** slides across the upward directed surface of the underlayment support **44** when the continuous belt is rotated about the rollers **40**, **42**. The underlayment support **44** is depicted in phantom in FIGS. **3** and **4**. The rollers **40**,**42** can take on a general crown shape, wherein the diameter increases toward the center to keep the belt **36** tracking in the center of the rollers despite lateral movement by the user. In addition, a plurality of vertical rollers **43** can be placed between the edge of the belt **36** and the inside surface of the frame **12** to keep the belt tracking in the center of the roller during use, as shown in FIG. **30**.

[0079] The third component of the treadmill sled **10** is the treadmill control system **16**. The treadmill control system **16** is best viewed in FIGS. **6-8**. The treadmill control system **16** can include a disk brake **48** mounted on the axle **46** of the first roller **40**. The disk brake **48** has a variable caliper **50** that is variably engageable with the disk brake **48**. The variable caliper **50** may be manually adjusted in order to increase or decrease the amount of resistance that the first roller **40** transmits through the rotatability of the continuous belt **36**. Accordingly, increasing the tension that the variable caliper **50** exerts upon the disk brake **48** directly effects the amount of driving effort that an athlete must impart to the continuous belt **36** in order to cause the continuous belt **36** to rotate about the rollers **40**, **42**.

[0080] A threaded tension adjuster **51** can be operably coupled to the roller axle **46** of the second roller **42**. Tension adjuster **51** directly effects the fore and aft disposition of the roller axle **46** relative to the frame **12**. By rotating the threaded tension adjuster **51**, the roller axle **46** of the second roller **42** is moved as depicted by arrow A of FIG. **7**. Moving the rolling axle **46** rearward (leftward) as depicted in FIG. **7** acts to increase the distance between the rollers **40**, **42**, thereby increasing the tension on the continuous belt **36**.

[0081] The fourth component of blocking/tackling embodiments of the treadmill sled **10** can include the blocking dummy **18**. The blocking dummy **18** may be a conventional blocking dummy having a canvass exterior enclosing a resilient foam interior. The blocking dummy **18** has an impact body **52**. The impact body **52** presents a rearward facing contact surface **54**. The contact surface **54** can be shaped in the shape of an opposing athlete, having a torso **56** and shoulders **58**. Other shapes of the impact body **52** may also be used, for example, a generally vertically disposed tubular body or a generally horizontally disposed tubular body. The impact body **52** may be mounted on a planar support **59**. The planar support **59** may have an outer margin that is roughly the shape of the side margin of the impact body **52**.

[0082] The fifth component of blocking/tackling embodiments of the treadmill sled **10** is the dummy support **20**. The dummy support **20** of the present embodiment of the treadmill sled **10** can include an elongate beam **62**. The beam **62** is fixedly coupled at the distal end by a single point attachment **60** to the planar support **59** of the blocking dummy.

[0083] The beam **62** has a pair of depending brackets **64***a*, **64***b*. The bracket **64***a* is more rearwardly disposed than the bracket **64***b* and has a lesser height dimension than the bracket **64***b*. The variance in height dimension of the brackets **64***a*, **64***b* effects an incline in the beam **62**, the incline declining in a rearward direction toward the distal end of the beam **62**. The brackets **64***a*, **64***b* are fixedly removably coupled to respective spaced apart receivers **68** by cross pins **66** that pass through bores defined in a respective pair of receivers **68** and a respective bracket **64***a*, **64***b*. The two pairs of receivers **68** are mounted on a box frame.

[0084] The box frame **70** includes a pair of spaced apart and generally parallel side rails **72**. The side rails **72** are operably coupled together by an end rail **74** and a front rail **76** to define the generally rectangular shape of the box frame **70**. There are two of the receivers **68** disposed on each of the two side rails **72**.

[0085] Four angular supports **78** can rise to support the box frame **70**. A first end of each of the angular supports **78**

is coupled to a respective side support **30** at a second end of each of the angular supports **78** is fixedly coupled to the box frame **70**. A pair of braces **80** rise to the box frame **70** to counter the force exerted by an athlete on the blocking dummy **18**. A first end of each of the braces is fixedly coupled to a respective side support **30** proximate the front margin of the respective side support **30**. Each of the braces **80** rise to a point proximate the point of connection of the rearwardmost angular support **78** with the box frame **70** and are fixedly connected to the box frame **70** proximate such point of connection.

[**0086**] A tray **82** can be disposed on a side of the dummy support **20**. The tray **82** is supported at an outer margin by a pair of depending tray legs **84**. The lower margin of the tray legs **84** is affixed to the upper margin of a side support **30**.

[**0087**] The final major element of the treadmill sled **10** is the performance measurement system **22**. In its simplest form in the embodiment of FIGS. **1-8**, the performance measurement system **22** includes a controller **90** disposed on the upward directed surface of the tray **82**. The controller **90** may be connected by a plurality of depending leads **92** to a plurality of sensors, as will be described. The controller **90** includes actuating switches **94** and readout **96**.

[**0088**] In the embodiment of FIGS. **1-8**, the treadmill sled **10** has three sensors utilized for evaluating the performance of an athlete using the treadmill sled **10**. First, the variable caliper **50** can be utilized to apply friction to the disk brake **48** to increase or decrease the resistance to motion that is available in continuous belt **36**. In conjunction with that, a laser beam **98** can be included to provide an output related to the position of the using athlete's hands when in contact with the contact surface **54** of the impact body **52**. A photoelectric cell **100** indicates when the user athlete's hands have commenced contact with the impact body **52**. When used in conjunction with an auditory command given simultaneously with electing initiation of a timer with an actuating switch **94**, the photoelectric cell **100** gives an indication of the reaction of the user athlete.

[**0089**] A further sensor can comprise a rotary encoder **102**. The rotary encoder **102** is in contact with the continuous belt **36** and provides an output to the readout **96** that is indicative of the distance traveled by the continuous belt **36** during the blocking maneuver executed by the using athlete.

[**0090**] A second embodiment of the treadmill sled **10** of the present invention is depicted in FIG. **9**. The treadmill sled **10** of FIG. **9** includes an enhanced controller **90** having a processor for calculating selected parameters based on sensed quantities. The braking system including the disk brake **48** and variable caliper **50** is used to estimate force production of a user athlete. A calibration procedure is generally conducted by the controller **90** to determine the force required to rotate the friction loaded disk brake **48**. As a result of applying a regression equation, the pressure applied by the variable caliper **50** to the disk brake **48** is utilized to predict the force required to rotate the continuous belt **36** of the treadmill sled **10**. After varying the pressure applied to the disk brake **48**, a second experiment may be conducted to estimate the force required to turn the belt **36** of the treadmill sled **10**. These values used in conjunction with the treadmill displacement as measured by the rotary encoder **102** and the time over which the displacement was effected results in an estimation of power output. Further embodiments of the measurement system **22** are described in detail herein.

[**0091**] A third embodiment of the treadmill sled **10** is depicted in FIGS. **10-14**. A major difference between this embodiment of the treadmill sled **10** and the previous two embodiments of the treadmill sled **10** is found in the dummy support **20**.

[**0092**] The dummy support **20** here includes a three point attachment **104** for supporting the blocking dummy **18**. The three point attachment **104** includes two spaced apart shoulder attachments **106***a*, **106***b* and a lower torso attachment **108**. The three point attachment **104** is fixedly coupled to a shiftable support frame **110**.

[**0093**] The shiftable support frame **110** includes a subframe **112** for direct coupling to three point attachment **104**. The subframe **112** has at least two flanges **114**, the flanges **114** having a plurality of adjusting holes **116** defined therein. By selecting the desired adjusting hole **116** on the flanges **114**, the relative height of the blocking dummy **118** can be adjusted as desired. The upper flange **114** is fixedly coupled to a horizontal support **120** by a pin **118**

[**0094**] The horizontal support **120** has depending flange **122** fixedly coupled to the underside margin thereof. The depending flange **122** has a plurality of holes **126** defined therein. A pin **124** disposed in a selected hole **126** may be coupled to a rising support **128**. By selecting a desired hole **126** for coupling with the rising support **128**, the angle of the blocking dummy **18** can be adjusted relative to a vertical disposition.

[**0095**] The rising support **128** is coupled at a first end to the flange **122** as indicated above. The rising support **128** is coupled at a second end to the lower flange **114** by a pin **118**.

[**0096**] The shiftable support frame **110** further includes a pair of parallel pivoting arms **130**. The pivoting arms **130** are pivotally connected to a respective receiver **132** mounted on the upper margin of the horizontal support **120** by pins **134**. The respective parallel pivoting arms **130** are pivotally coupled at a second end to a respective receiver **68** by cross pins **66**.

[**0097**] With the aforementioned structure, the side rail **72**, the horizontal support **120** and the parallel pivoting arms **130** function as a shiftable parallelogram. A force imparted to the blocking dummy **18** will cause this parallelogram to shift as indicated by the arrow B in FIG. **14**.

[**0098**] A depending moment arm **136** is fixedly coupled to the shiftable support frame **110**. The moment arm **136** is coupled at a distal end **138** to a spring **140** by a pivotal coupling **142**. The spring **140** is further pivotally coupled at a second end by a pin **144** forming a pivotal coupling **146** with the frame **12**.

[**0099**] Motion as indicated by the arrow B that is imparted to the shiftable support frame **110** results in a rotation of the moment arm **136** as indicated by the arrow C. Accordingly, the motion indicated by arrow B is resisted by the bias exerted by the spring **140** on the distal end **138** of the moment arm **136**.

[**0100**] The motion of arrow B results in a measurable extension of the spring **140**. Accordingly, an extension

sensor **150** may be utilized in conjunction with the spring **140**. Additionally, individual force sensors **148** may be associated with each of the attachments **106***a*, **106***b*, and **108** of the three point attachment **104**.

[**0101**] With the third embodiment of the treadmill sled **10**, the extension sensor **150** is utilized to estimate force production of a user athlete exerting a force on the blocking dummy **18**. As a result of applying the regression equation, the linear displacement through extension or lengthening of the spring **140** by the force exerted by the user athlete is utilized to estimate the force required to effect such extension. This value plus the spring displacement, treadmill displacement, and time of exerting the force results in an estimate of power output by the user athlete.

[**0102**] Force exerted by the user athlete is directly measured as close as possible to where the user athlete impacts the blocking dummy **18**, thereby resulting in no significant losses into the supporting structure. This is accomplished with the multi-axis force sensors **148** associated with the attachments **106***a*, **106***b*, and **108**. These force sensors **148** or load cells are kinematically mounted so that their measurements can be added to obtain the resultant forces and moments. Unlike existing field sleds used in practice, the treadmill sled **10** of the present invention provides an inertial reference frame in which the magnitudes and directions of the forces exerted by the user athlete can be directly measured. Instantaneously measuring the forces at the at least one force sensor **148** provides the data necessary to calculate the position of the applied forces with respect to the blocking dummy **18**, their magnitude, and their directions.

[**0103**] Further, displacement of the continuous belt **36** is generally measured by the rotary encoder **102**. Displacement of the spring **140** is measured by the extension sensor **150**. The signal received from the foregoing sensors are collected and processed by a data acquisition card and processor in the controller **90**. An actuating switch **94** triggers the start of data acquisition. The photoelectric cell **100** indicates the user athlete's initial movement and an internal clock in the controller **90** keeps track of time expended throughout an evolution. By reading the forces, displacements, and time, the controller **90** calculates the resulting output and displays on the readout **96**.

[**0104**] The fourth embodiment of the treadmill sled **10** is depicted in FIGS. **15-21**. A major addition to this embodiment as compared to the previous three embodiments is the inclusion of a power system **152**. The power system **152** in its simplest forms includes an electric motor **154** that is operably coupled to a belt drive **156**. The belt drive **156** is rotatably engaged with a pulley **158** that a fixedly coupled to the roller axle **46** of the first roller **40**. Operation of the electric motor **154** acts to impart a rotational motion to the first roller **40**, the first roller **40** acting on the continuous belt **36** to cause rotation thereof.

[**0105**] In a more sophisticated mode, the pulley **158** and the pulley **162** mounted on the output shaft of the electric motor **154** comprise a variable speed transmission **160** by cooperatively varying the effective diameter of the two pulleys **158**, **162**, the variable speed transmission **160** can effect a substantially infinite variable velocity of the continuous belt **36** while maintaining the rotational output of the electric motor **154** at substantially a constant revolutions per minute.

[**0106**] With the addition of the power system **152**, the number of additional modes of operation of the treadmill sled **10** are possible. The first of such modes is the isokinetic mode of operation. In this mode, the treadmill belt **36** is driven at a constant velocity by the power system **152**. Force is measured while performing blocking, charging, and tackling. User athletes are evaluated for their ability to apply forces at various velocities of the continuous belt **36**. Different positions manned by the user player require testing and training at different velocities depending on the movement patterns normally performed by a player manning that position.

[**0107**] The second mode is isotonic. In this mode, a constant resistance is applied to the continuous belt **36** by the tension adjuster **51** acting on the variable caliper **50**. The velocity of the belt **36** is free to change depending on the amplitude and frequency of the force supplied by the user athletes force supplied to the belt **36**. The athlete user is then evaluated for the ability to block, charge, and tackle at various treadmill belt **36** resistances.

[**0108**] The final mode of operating is matching speed to maintain force production. In this mode of operation, force applied to the pad remains constant throughout the block, charge, or tackle. The controller **90** acts to increase or decrease the speed of the belt **36** by its control over the variable speed transmission **160** depending upon the amount of force applied to the pad. To increase force production, controller **90** lowers the velocity of the belt **36** and to reduce the force production, the processor **90** increases the velocity of the belt **36**.

[**0109**] A further somewhat unrelated mode of operation is that utilized for pass blocking. In pass blocking, the offensive player is required to execute a series of back-pedaling movements interspersed with explosive contacts with the charging defensive player, while trying to remain positioned between the defensive player and the ball carrier. To simulate this skill on the treadmill sled **10**, the isokinetic mode, described above, is utilized with the belt **36** turning in the opposition direction than would be used for the modes described above. The belt **36** travels at a constant velocity. The athlete user performs this back-pedaling motion to match the speed of the treadmill belt **36**. An auditoric or visual stimulus to the user athletes signals when to make an explosive contact with the blocking dummy **18** (the pad), after which the user athlete returns to the back-pedaling movement. This is repeated for a number of times during a period of time lasting approximately 10 seconds. The force amplitude is measured for each contact with the blocking dummy **18**.

[**0110**] FIG. **22** applies principally to the fourth embodiment described above. The controller, which includes a processor, performs the calculations detailed in FIG. **22** to arrive at a number of useful outputs that relate to the ability of the user athlete. The outputs are depicted in the output box at the lower portion of the figure. The graphic representations may be presented to the operator of the treadmill sled **10** on the readout **96** and may further get recorded for tracking of a particular user athlete's performance over a number of different sessions on the treadmill sled **10**.

[**0111**] A fifth embodiment of the present invention is depicted in FIGS. **23-26**. The design of FIGS. **23-26** was made in order to retain all the functions of the aforemen-

tioned designs yet reduce the mass and size of the treadmill sled **10**. In order to accomplish this, the treadmill sled **10** substantially reconfigured. A platform **163** extends between the side supports **30** forward of the leading edge of the continuous belt **36**. Controls and readouts for the performance measurement system **22** are positioned on the platform **163**. The readout **96** is slightly elevated from the platform **163** and inclined toward the athlete user of the treadmill sled **10**. It is further disposed toward a side of the treadmill sled **10** so that a coach or other monitoring individual can readily view the information presented on the readout **96**.

[**0112**] Controlling elements of the treadmill control system **16** are positioned proximate the readout **96**. The first such control is a pressure adjustment wheel **16**. The pressure adjustment wheel **16** imposed a load on the variable caliber **50**, which in turn applies pressure to the disk brake **48**. See FIG. **24***a*. A pressure gauge **49** provides a pressure acting on the variable caliber **50**. The pressure registered on the pressure gauge **49** that is dialed in by the tension adjuster **51** is sensed by the performance measurement system **22**. The dummy support **20** of the present embodiment has been considerably changed with respect to the aforementioned dummy support **20**. In the instant embodiment, beam **62** comprises a pivotable generally upright member. The beam **62** projects through an aperture defined in the platform **163**. Referring to FIGS. **25** and **26**, the beam **62** has a first end **164** that is removably received within a receiver **57** defined in the blocking dummy **18**. The first end **164** is secured to the blocking dummy **18** by fasteners **165** that may be removable for replacement of the blocking dummy **18** or for the height of the blocking dummy **18** relative to the platform **163**. The fasteners **165** may be pins or bolts or the like that are readily accessible for ease of removal as desired.

[**0113**] The beam **62** is pivotally coupled to the frame **12** at a pivot point **168**. The beam **62** may be coupled by a pivot pin **172** disposed in bores that are in registry and defined in the beam **62** and in two flanking support brackets **170** disposed on either side of the beam **62**. The support brackets **170** are fixedly coupled to the frame **12**.

[**0114**] A second end **166** of the beam **62** depends from the pivot point **168**. In one embodiment, a slight bend in the beam **62** proximate the pivot point **168** projects the send end **166** toward the forward end of the treadmill sled **10**.

[**0115**] A damper **74** operably couples the second end **166** of the beam **62** to the frame **12**. In the sectioned representation of FIGS. **25** and **26**, it can be seen that the damper **174** has a cylinder housing **176** and a translatable piston **178** disposed in part within the cylinder housing **176**. The piston **178** is coupled by a pivotable coupling **180** to the second end **166** of the beam **62**. Likewise, the cylinder housing **176** is coupled by a pivotable coupling **182** at a distal end thereof to a damper bracket **184**. The damper bracket **184** can have two portions that flank the cylinder housing **176**. The damper bracket **148** is fixedly coupled to the frame **12**.

[**0116**] A force as indicated by arrow C in FIG. **25** that is imparted to the blocking dummy **18** results in the beam **62** rotating about the pivot point **168**. Such action forces the piston **178** into the cylinder housing **176** against a resistance that can be hydraulic. The amount that the piston **178** is forced into the cylinder housing **176** is measured by an extension sensor **158**. The extension sensor **158** can be a string potentiometer that is disposed generally parallel to the damper **174**. The output of the extension sensor **150** can be connected to the performance measurement system **22**.

[**0117**] A sixth embodiment of the treadmill sled **10** of the present invention is depicted in the sectional representations of FIGS. **27-29**. These embodiments of the treadmill sled **10** may or may not include performance measuring system **22** as described with reference to the previous embodiments. As depicted in FIG. **27**, the treadmill sled **10** includes a power system **152** having an electric motor **154** and a belt drive **156**. Further, this embodiment traditionally includes a variable speed transmission coupling the electric motor **154** to the first roller **40**.

[**0118**] In the embodiment of FIGS. **27** and **27***a*, the treadmill sled **10** is a generally straight beam **62**. The configuration results in the blocking dummy **18** being tilted downward toward the continuous belt **36**. An athlete impacting the blocking dummy **18** must exert both an upward and forward force on the blocking dummy **18**. In the embodiment of FIG. **27**, the blocking dummy **18** is coupled to the beam **62** substantially as described with reference to the embodiment of FIGS. **25** and **26**.

[**0119**] In the embodiment of FIGS. **27-29**, a coil over spring **186** is generally disposed about the damper **174**. The coil over spring **186** acts in cooperation with the damper **174** to resist the force imparted to the blocking dummy **18** by an athlete disposed on the continuous belt **36**.

[**0120**] Turning to FIG. **28**, the blocking dummy **18** is coupled to the beam **62** by a single point attachment **190**. The single point attachment **190** includes a force sensor **148** disposed therein. The force sensor **148** is in communication with the performance measurement system **22** and can include a single axis or multi-axis load cell for sensing force in operable communication with the controller **90** and the performance system **22**, wherein the load cell sensor **148** can be mounted on any of the embodiments of the present invention. It should be noted that the beam **62** is formed of two collinear portions, beams **62***a* and **62***b*. The beam **62***a* is detachable from beam **62***b*, leaving a stub of the beam **62**. Alternatively, as shown in FIG. **28***a*, an offset pivot beam assembly **62***c* can be utilized. The assembly **62***c* generally includes the beam **62** and an offset beam **63** such that the dummy **18** can be offset to allow for more available space for the user on the invention **10**.

[**0121**] With reference to the embodiment of FIG. **29**, a resistive running device **191** is coupled to the beam **62***b*. The resistive running device **191** includes a generally tubular pad **192**. The tubular pad **192** is disposed generally at a height that approximates the lower torso portion of a runner. Accordingly, a runner disposed on the continuous belt **36** is positioned with the lower torso, upper pelvic region resting against the pad **192**.

[**0122**] The tubular pad **192** is fixedly coupled to an arm **194** that extends forward from the pad **192**. The arm **194** preferably has an elbow **196** and a generally depending connecting **198**. The connecting arm **198** is connected to the beam portion **62***b* by readily removable pins **200**. A plurality of bores may be defined in either or both the connecting arm **198** and the beam portion **62***b* in order to adjust the height of the pad **192** relative to the support surface **38** of the continuous belt **36**.

[0123] In operation, the embodiment of FIG. **29** may be utilized with a certain amount of rotational resistance dialed in to the continuous belt **36** by the tension adjuster **51** acting on the variable caliber **50**. A user may then lean into the tubular bed **192** and exert a certain amount of running force on the support **38** of the continuous belt **36**.

[0124] In an embodiment shown in FIG. **31**, the blocking dummy **18** further includes a hinged pad beam **236**, a support beam **238**, at least one spring **240**, and at least one spring potentiometer **242**. The hinged pad beam **236** and support beam **238** can be removably fixed to the dummy **18** along the same upward plane as the dummy **18**. The pad beam **236** and support beam **238** are generally parallel and spaced from each other with the at least one spring **240** providing an intermediate tensioned contact, wherein the movement of the beams **236**, **238** toward one another causes a corresponding compression tension on the spring **240**. Connected to, or abutting, at an end of the spring **240** is the potentiometer **242** which senses the compression force being applied on the spring. In turn, the potentiometer **242** is in operable communication with the controller **90** and its performance measurement system **22**. As such, compression readings from the at least one potentiometer **242** are communicated to the controller **90** for use by the automated control and assessment system program **210** detailed herein.

[0125] In one embodiment, there are spring **240** and corresponding potentiometer **242** sets spaced proximate each end of the dummy **18** such that one set is proximate the support **20** and the other is attached distal the support **20**. With such a configuration, it is possible to accurately measure the force magnitude according to the contact location and compression from the athlete user against the dummy **18**. As the user motions along the belt **36** the user assumes a generally crouched position to forcibly contact the dummy **18** at a target location. The controller **90** and control and assessment program **210** can calculate the height and magnitude of the force from the communicated converted signal to the controller **90**. In alternative embodiments, the spring **240** and potentiometer **242** sets can be selectively located along the parallel beams **236**, **238** in accordance with specific compression, location, and magnitude measurements to be calculated and processed.

Tethered Sprinting

[0126] Embodiments of the present invention **10** can be configured for facilitating, controlling, and assessing sprinting motions and activities. In one embodiment, as shown in FIG. **32**, a generally looped tether strap **250** is removably selectively secured around the dummy **18** at one end. In such an embodiment, the dummy **18** of any of the invention embodiments described herein can include fasteners or securing means for securely receiving an end of the strap **250**. For instance, hooks and latches connectors (i.e., Velcro), hooks, snapping devices, buckled fastening, and a myriad of other connecting techniques can be implemented without deviating from the spirit and scope of the present invention. In addition, it is envisioned that the pad **34** can be removed such that the strap **250** is attached or looped to the beam **62**, as shown in FIG. **34**.

[0127] As with various embodiments of the present invention **10**, the belt **36** is generally without motor power. Instead, a resistive sprinting session is driven by the sprint power of the user athlete on the belt **36**. A brake system **48** as described herein can be utilized in conjunction with this treadmill sled sprinting embodiment. Further, the tension adjusters **51** and variable calibers **50** can increase the coefficient of friction to adjust friction. Friction resistance can be adjusted according to training and user specific needs and goals. The end of the tether **250** opposite the fastened end is capable of receiving the user athlete, generally around the waist. In accordance with the height of the user, the attachment height of the tether **250** to the dummy **18** is correspondingly adjustable. As a result, the user is capable of performing simulated sprinting distances within the confines of the invention **10** since the tether **250** restricts the user while allowing for varying sprint levels. As described herein, distance, speed, and other readings from the belt and sprinting regime are fed to the controller **90** and control and assessment system **210** for processing.

[0128] Another tethered sprinting embodiment of the present invention can include a powermill system **252**, as shown in FIG. **33**. Rather than removably attaching the tether strap **250** to the dummy **18**, a tether support frame system **254** is included. The frame system **254** comprises at least one vertical support bar **256**. The support bar **256** is capable of receiving an end of the tether **250** distal the loop end that receives the user. The strap **250** can be fastened as described herein, or simply looped over the bar **256**. As with other sprinting embodiments, simulated sprinting distances and speeds can be simulated and processed within the confines of the system **252**.

[0129] In any of the embodiments, tackling/blocking and sprinting in particular, of the present invention, at least one force sensor **148** or **260** can be included to measure the tension or pulling force on the tether **250** from the participating user athletes. Generally, the force sensor **260** will comprise a single or multi-axis load cell in operable communication with the controller **90** and control system **210** such that force feedback data is transmitted to the controller and processor for processing. Direction of force, tension values, average and instantaneous force magnitude values, and like measurements can be taken from the at least one sensor and combined during processing with the displacement of the belt **36** to provide enhanced control and feedback by the program **210**. For instance, functional power can be calculated as a product of force in a specific direction on the sensor **260** and the displacement of the belt **36** and/or dummy **18**, divided by the time of execution. This power function can provide data on average power, impact power, maximum power, minimum power, and reduction in power. During sprinting in particular, the at least one cell **260** assists in calculating magnitude and direction measurements that can be used to process and analyze work and power for the sprinter using the inertial reference frame of the present invention **10**, as shown in FIG. **35**.

[0130] Referring again to FIG. **30**, a static dissipater **262** is shown. In one embodiment of the static dissipater **262**, at least one strand of dissipating material, such as copper, is selectively configured to come into contact with a portion of the belt **36**. This at least one strand is in turn grounded to the frame or other apparatus such that static buildup on the belt is discharged through to ground to protect the electronics of the invention **10** from being damaged. Generally, the static will thus dissipate through the frame's ground to an electricity source (not shown) such as a wall plug-in unit. Each of the embodiments of the invention disclosed herein can

employ this static dissipater **262**. In addition, other techniques, apparatus, and methods understood to one skilled in the art for dissipating static away from such a device can also be employed without deviating from the spirit and scope of the present invention.

Automated Control and Assessment System

[**0131**] Generally, the performance measurement system **22** of the present invention includes a versatile re-programmable automated control and assessment system program **210** running on a microprocessor and/or other circuitry components within the controller **22**, **90**. Each of the above-described apparatus and embodiments for the treadmill sled **10** can implement the automated program **210** described below as either individually isolated systems, or as a distributive or cooperative networked system of a plurality of embodiments or treadmill sled stations **212**. Each station **212** is capable of being configured as any of the apparatus and unit embodiments described herein and can be in operable communication with the other stations and their respective automated programs **210**.

[**0132**] Referring to FIG. **36**, an embodiment of the program **210** is shown. The program **210** generally comprises a series of steps or routines. These steps can include a user identity step **216**, a mode selection step **218**, a training parameter step **220**, and a training duration step **222**. The training duration step **222** can further include a start loop step **224**, a training work step **226**, a resting/recovery period step **228**, and an end training step **230**. Each of these steps are indicative of general periods of input, control, and analysis for the program **210**, but various training specific steps and procedures can be implemented at each level to create a highly programmable and flexible program.

[**0133**] The program **210** operates to trigger work **226** and rest **228** intervals for a single athlete or a plurality of athletes such that specific gaming and other real-life timing and conditioning patterns can be simulated. After completion of a training regimen, or a plurality of regimens, at least one athlete is able to download, or visually observe the performance statistics and evaluations derived from the controlled training session.

[**0134**] The user athlete is generally required to input user information **216** into the controller **90**. This permits the controller to cross-compare with other athletes, restore and consider the individuals previous workouts, or future workout goals, and to provide the information needed to save the specific data for the upcoming training session. The user athlete can input the user information through a key pad, or through the use of a swippable card having magnetically stored information. In addition, other input techniques, devices, and methods known to one skilled in the art can also be employed without deviating from the spirit and scope of the present invention.

[**0135**] For an embodiment of the program **210** running on the controller **90** of the sprint and blocking embodiments of the present invention **10**, the user is next required to input the test or training mode **218** of the upcoming training session. Alternatively, the specific requirements, simulation goals, and mode requirements can be uploaded to the controller **90** via the networked system described below. Other described and understood exercise modes can also be implemented in various combinations.

[**0136**] For a the parameter selection **218**, the program **210** will generally require parameter settings **220** for test length, the number of users for the session, the number of repetitions per user, and the recovery time required for each. Again, these parameters can be inputted manually by the user, obtained from information on the user's magnetic card, or from the networked system. In addition to these parameters, other relevant parameters for enhancing the productivity and effectiveness of the present invention **10** can be utilized as well. For instance, the program **210** can output a minimum resting period for each repetition, and allow the user to make adjustments. Further, such adjustments can be eliminated by pre-programmed input settings by supervisory personnel.

[**0137**] With the aforementioned parameters configured within the program **210**, the controller **90** will generally initiate a start sequence **224** which can involve the implementation of an auditory trigger signal to begin the session along with visual indicia of the initiation of the session on the readout **96**. The audible trigger signal can be various beep combinations, voice plays, and the like. The visual indicia will generally include a detailed list for each athlete. For instance, a prompt for "user**1**" may indicate for that user to begin repetition X of Y. In addition, data for each of the users may be visually indicated on the readout **96** with potential comparison graphs and progress data summaries provided as well. Preferably, the ready signal or trigger will be followed by a random delay to prevent the user from obtaining unfair timing advantages based on past experience.

[**0138**] Once the particular repetition for a specific user is initiated at the work step **226**, the controller **90** begins to retrieve data as detailed in each of the sprinting systems described herein. For instance, repetition specific traveling distances, and aggregate traveling distances, can be displayed on the readout **96** from the sprint mode regimen. Further, response time, max force, and distance can be outputted for the readout **96** in the block/tackle mode regimen. Upon completion of the user specific repetition, the rest period **228** is initiated, wherein an individual user can rest and prepare for the next repetition. In multi-user embodiments, each individual user can complete their designated workout periods and respective rest periods **228** before the controller **90** will prompt the positioning of the next user. Alternatively, the next user can position for their repetition at each user rest period. Other variations on these configurations are also envisioned.

[**0139**] If further repetitions are required, the program **210** will loop back to the initiation of the start sequence **224**. This process will loop back until each of the repetitions for each of the applicable user athletes are completed. Upon completion, the end training step **230** is initiated wherein summary data can be displayed and saved for each of the athletes. For instance, distance traveled for each repetition and the aggregate training session can be displayed. Further, it is possible to calculate and display average improvement through the repetitions, comparisons to other user athlete performances, comparisons between the current distance performance and previous stored performances, current performance in view of the overall performance goals set, and a myriad of other relevant training summaries. Other calculations and data manipulations are also anticipated. This computed data and visual information can be merely displayed, or it can be

transmitted or stored for future evaluation and use. For instance, the controller **90** can include a data storage device **214** such a computer disk drive, ZIP drive, writable CD, and the like. Moreover, the data can be transmitted through the network system described herein for still more computations and manipulation. In addition, the training data can be uploaded to other autonomous work stations through their respective controllers **90** by way of the data storage device **214** such that autonomous stations can still receive relevant workout parameters and other user data from previous workouts at other stations.

[**0140**] Specific embodiments of the present invention will be linked together using various understood networking topologies. For instance, each of the controllers **90** for the individual training stations or embodiments can be linked via cabling, RF transceivers, and the like. Preferably, each of the controllers **90** can include a network card that is linked to at least one central server such that the inputted and generated data at each station is capable of being shared and utilized by other stations and evaluated and manipulated by supervisory personnel at the central server. In such an embodiment, the user can complete the described training at a first station, and then proceed on to a second station, wherein the second station continues a long term broad training program taking into account the various performance statistics from the previous workouts, training modifications from supervisory personnel at the server, fixed training goals for each station, and a myriad of other shared variables and data.

[**0141**] It will be obvious to those skilled in the art that other embodiments in addition to the ones described herein are indicated to be within the scope and breadth of the present application. Accordingly, the applicant intends to be limited only by the claims appended hereto.

What is claimed is:

1. A method for assessing the performance of a plurality of users during a training session, comprising:

providing a physical training device having an operably connected controller to execute a program for monitoring the performance of a plurality of users for a training session, an input device in operable communication with the controller to receive user input, and an output device in operable communication with the controller;

providing to the controller a mode input defining the work to be performed for the training session;

providing to the controller a total user input defining the number of the plurality of users to perform the work for the training session;

providing to the controller an identity input identifying the plurality of users;

initiating at the controller a work start loop for a first of the plurality of users identified;

prompting at the output device the first user to begin the work for the training session;

processing at the controller work performance data for the first user;

prompting at the output device a second user of the plurality of users to begin the work for the training session; and

processing at the controller work performance data for the second user.

2. The method of claim 1, wherein providing to the controller the mode input includes inputting the mode input at the input device.

3. The method of claim 1, wherein providing to the controller the mode input includes providing the mode input from a remote device in operable communication with the controller.

4. The method of claim 1, wherein providing to the controller the identity input includes inputting the identity input at the input device.

5. The method of claim 1, wherein providing to the controller the identity input includes providing the identity input from a remote device in operable communication with the controller.

6. The method of claim 1, wherein the performance data processed for at least one of the plurality of users includes a duration of time the at least one user athlete takes to complete the work.

7. The method of claim 1, wherein the performance data processed for at least one of the plurality of users includes a total amount of work performed by said at least one user.

8. The method of claim 1, wherein the performance data processed for at least one of the plurality of users includes a total amount of work performed by said at least one user over a duration of time.

9. The method of claim 1, wherein the performance data processed for at least one of the plurality of users includes a distance traveled for said at least one user.

10. The method of claim 1, wherein the prompting at the output device for the first user to begin includes visual prompting at the output device.

11. The method of claim 1, wherein the prompting at the output device for the first user to begin includes auditory prompting at the output device.

12. The method of claim 1, wherein the work for the training session is selected from a group consisting of: sprinting, dummy blocking and resistive sprinting.

13. The method of claim 1, wherein the physical training device includes a resistive sprinting device.

14. The method of claim 1, wherein the physical training device includes a blocking dummy device.

15. The method of claim 1, further including prompting at the output device the first user to begin a resting period for the training session.

16. The method of claim 1, further including displaying at the output device a summary of the work performed for at least one of the plurality of users.

17. The method of claim 16, wherein displaying the summary of work performed includes displaying progress data prior to initiating the work start loop.

18. The method of clam **1**, further including displaying at the output device a summary comparing the work performance of at least one of the plurality of users with other users.

19. The method of claim 1, further including displaying at the output device improvement for at least one of the plurality of users in comparison to at least one previous training session for said at least one user.

20. A method for assessing the work performance of a plurality of users, comprising:

providing a physical training device having an operably connected controller to monitor the work performance of a plurality of users, and an output device in operable communication with the controller;

providing to the controller the work to be performed by the plurality of users;

providing to the controller a total user input defining the number of the plurality of users to perform the work;

providing to the controller an identity input identifying the plurality of users;

prompting at the output device a first of the plurality of users to begin the work;

processing at the controller work performance data for the first user;

prompting at the output device a second of the plurality of users to begin the work;

processing at the controller work performance data for the second user; and

displaying at the output device a summary of the work performed for at least one of the plurality of users.

21. The method of claim 20, wherein the physical training device includes a resistive sprinting device.

22. The method of claim 20, wherein the physical training device includes a blocking dummy device.

23. The method of clam **20**, further including displaying at the output device a summary comparing the work performance of at least one of the plurality of users with other users.

24. The method of claim 20, further including displaying at the output device improvement for at least one of the plurality of users in comparison to previous work performed by said at least one user.

25. The method of claim 20, wherein the performance data processed for at least one of the plurality of users is selected from a group consisting of: distance traveled, response time, and force.

26. A method for assessing the work performance of a plurality of users, comprising:

providing a physical training device in operable communication with a controller to monitor the work performance of a plurality of users, and an output device in operable communication with the controller;

inputting a work input prescribing the work for the plurality of users;

inputting an identity input identifying the plurality of users;

prompting at the output device a first of the plurality of users to begin the work prescribed;

measuring at the controller work performance data for the first user;

prompting at the output device a second of the plurality of users to begin the work prescribed;

measuring at the controller work performance data for the second user; and

displaying at the output device a summary of the work performed for at least one of the plurality of users.

27. The method of claim 26, wherein the performance data processed for at least one of the plurality of users is selected from a group consisting of: distance traveled, response time, and force.

28. The method of claim 26, further including displaying at the output device improvement for at least one of the plurality of users in comparison to previous work performed by said at least one user.

29. The method of claim 26, wherein the physical training device is selected from a group consisting of: a resistive sprinting device, and a blocking dummy device.

30. The method of claim 26, further including communicating the performance data for at least one of the plurality of users to a remote device.

31. The method of claim 30, wherein the remote device is a controller for a remote physical training device.

32. The method of claim 30, wherein the remote device is a remote network system.

* * * * *