(12) STANDARD PATENT (11) Application No. **AU 2017210620 B2**
(19) AUSTRALIAN PATENT OFFICE

(54) Title
HELMET WITH REMOVABLE PADDING ELEMENT

(51) International Patent Classification(s)
A42B 3/00 (2006.01)

(21) Application No: **2017210620** (22) Date of Filing: **2017.08.04**

(30) Priority Data

(31) Number	(32) Date	(33) Country
102016000083163	**2016.08.05**	**IT**

(43) Publication Date: **2018.02.22**
(43) Publication Journal Date: **2018.02.22**
(44) Accepted Journal Date: **2023.01.12**

(71) Applicant(s)
NOLANGROUP S.p.A.

(72) Inventor(s)
Salvetti, Alberto;Mandelli, Alberto;D'Adda, Giuseppe

(74) Agent / Attorney
Patent Attorney Services, 26 Ellingworth Parade, BOX HILL, VIC, 3128, AU

(56) Related Art
EP 2022358 A2

201721062O 04 Aug 2017

ABSTRACT

Helmet comprising a padding element removably constrained to the shell and provided with at least one first seat so that a first protrusion integral with the shell is reversibly engaged, reversibly-coupling male - female means to reversibly male - female couple the shell and the padding element, which are adapted to define a hinge point for the relative rotation between the shell and the padding element; restraining means to selectively restrain and release said first protrusion in and from said first seat; wherein said restraining means are movable between at least: a first restraint position to restrain said first protrusion in said first seat, so that the relative rotation between the shell and the padding element is prevented; a second disengagement position of said first protrusion from said first seat, so that the relative rotation between the shell and the padding element is allowed.

2017210620 04 Aug 2017

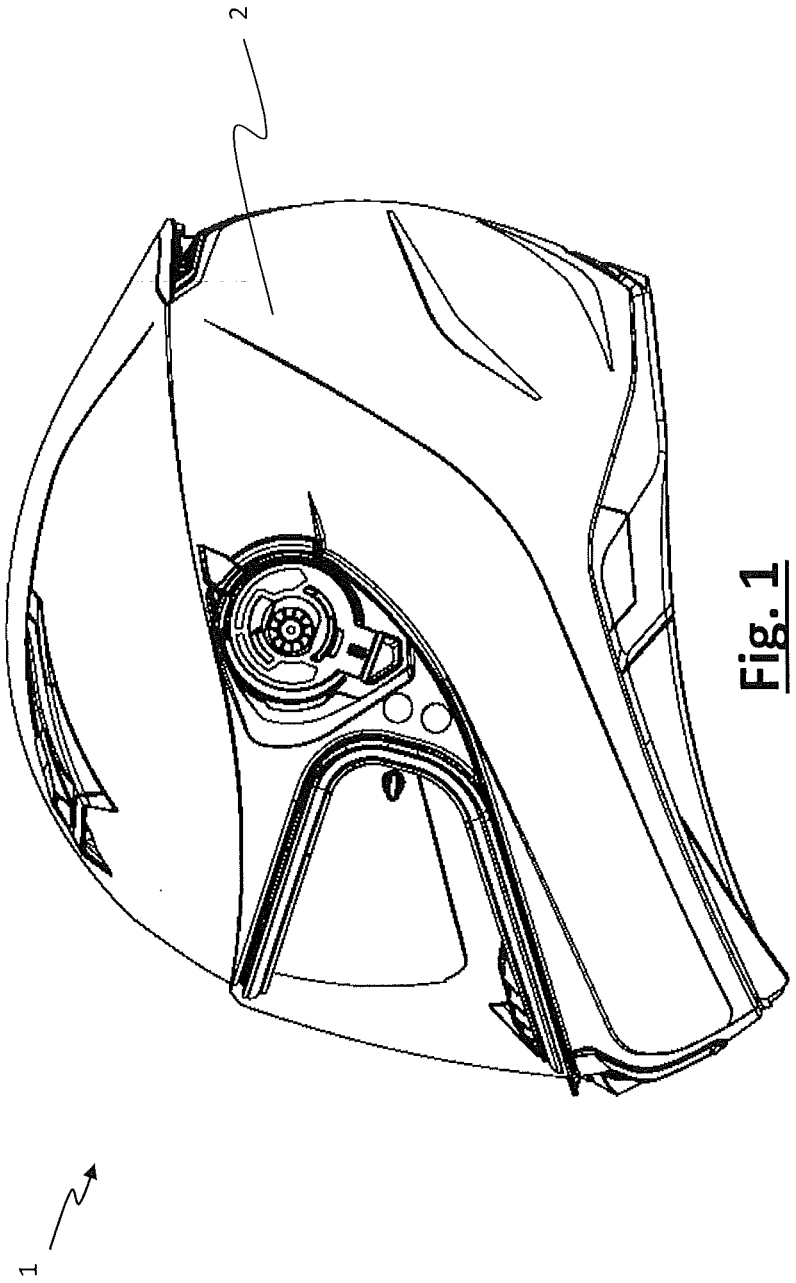

Fig. 1

20172106 20 04 Aug 2017

HELMET WITH REMOVABLE PADDING ELEMENT

The present invention refers to the helmet field, in particular integral helmets for bikers or the like, which are provided with padding elements, typically cheek pads, removably constrained to the shell.

Such helmets generally comprise an outer shell, for example made of ABS, polycarbonate, etc. or composite material, such as carbon and/or aramid and/or glass fibers, and an inner shell generally foam-made, such as polystyrene. The assembly of such outer and inner shells, the first one fixed to cover the latter, aids to form what hereinafter we generically denote as "shell" and substantially constitute the helmet portion adapted to accommodate the rider's head of a motorcycle or the like. In order to improve the rider's safety and better adapt the inner portion of the shell to the rider's head, usually padding elements are arranged inside the shell.

Typically, such padding elements comprise little cushions or pads, for example made of foam rubber, arranged at the cheeks and chin of the rider wearing the helmet itself. Such devices are usually deformable and, in use, they have a portion engaging the lower portion of the chin.

Such solution increases the user's comfort and safety, but wearing and removing the head from the helmet become complex. This is a problem, for example, especially when the helmet user has a road accident, and someone aiding the injured rider has to remove the helmet itself. In fact, to accomplish such an operation, the aider must apply high force onto the helmet and then the user, thus the health of the injured rider could be compromised. For this reason, removing the helmet from the wearer is very difficult for everyone.

Therefore, helmets having padding elements reversibly constrained to the shell are known, for example by snap-fit buttons.

By removing the padding elements, in particular those placed at the user's chin, the helmet removal from the wearer's head is very simpler. However, the removal operations of the padding element are not simple when the user's head is in the helmet. Moreover, during the helmet dressing step, a certain force is applied against the padding element, so that it is deformed to allow the head to pass. Such force can cause the undesirable detachment of the padding element from the shell, the user getting annoyed.

The above references to and descriptions of prior proposals or products are not intended to be, and are not to be construed as, statements or admissions of common general knowledge in the art in Australia.

It is therefore object of the present invention to solve the problems mentioned above.

It is a particular object of the present invention to implement a helmet provided with a padding element being simple to remove if necessary and, at the same time, remaining firmly constrained to the helmet when the its detachment is undesirable.

These and other objects are solved by the present invention by means of a helmet according to claim 1. Preferred aspects are set forth in dependent claims.

According to an aspect of the present invention, a helmet comprise: a shell for the absorbing shocks; a padding element removably constrained to the shell and provided with at least one first seat so that a relative first protrusion integral with the shell is reversibly engaged; reversibly-coupling male - female means to reversibly male - female couple the shell and the padding element, which are adapted to define a hinge point for the relative rotation between the shell and the padding element; restraining means to selectively restrain and release the first protrusion in and from the first seat. The shell comprises the male element and the padding element comprises the female element of the reversibly coupling means, or vice versa. The restraining means are movable at least: between a first restraint position, wherein said restraining means engage the first seat to restrain said first protrusion in the first seat, so that the relative rotation between the shell and the padding element around the hinge point is prevented; a second disengagement position, wherein the restraining means are disengaged from the first seat to release the first protrusion from the first seat, so that the relative rotation between the shell and the padding element around the hinge point is allowed.

Thanks to the herein proposed solution, the padding element is firmly and integrally constrained with the shell when the restraining means are in the first restraint position, thus avoiding the undesirable and accidental relative movement between the padding element and the shell. On the contrary, when the helmet has to be removed easily from the user's head, the activation of the restraining means allows the first protrusion to be easily released from the first seat and allows a relative rotation between the padding element and the shell.

In particular, the presence of the restraining means allows the accidental release of the padding element from the shell to be avoided and, at the same time, once the restraining means have been activated, the simple removal of the helmet from the user's head is allowed, particularly allowing the relative rotation between the padding element and the shell, so that the padding element is moved to a position substantially not interfering (or minimally interfering) with the user's head.

In particular, it has to be noticed that the relative movement between the shell and the padding element is substantially of mere rotation, whereby axial movements (i.e. along a relative moving-away direction) between the padding element and the shell are not needed.

According to an aspect of the invention, the first seat comprises an edge having an open perimeter, which is preferably U-shaped, and the restraining means are designed so that the perimeter of above mentioned edge is closed, in the first restraint position.

Preferably, the reversibly-coupling male - female means are snap-fit coupling means.

According to an aspect of the invention, the restraining means comprise a lever hinged to the padding element. The lever has an activating portion, that can be activated by a user to move the restraining means between the first restraint position and the second disengagement position, and an engaging portion adapted to be engaged with the first seat in the first restraint position.

According to an aspect of the invention, elastic elements are arranged to push the restraining means towards the first restraint position.

According to an aspect of the invention, the shell comprises a foam-made portion, and the first protrusion and the male or female element of the reversibly-coupling means, which is integral with the shell, have a threaded portion for coupling to the above mentioned foam-made portion.

According to an aspect of the invention, the threaded portion has one or more of the following features:

thread having variable depth, preferably a progressively decreasing one;

ratio, between maximum depth and pitch of the thread of the threaded portion, comprised between 1.00 and 1.80, preferably between 1.20 and 1.60,

more preferably equal to about 1.40;

ratio, between inner diameter Di and the maximum depth Hmax of the thread of said threaded portion, comprised between 0.15 and 0.5, preferably between 0.15 and 0.35, more preferably equal to about 0.23;

thread with variable thread angle, with minimum value comprised between 25 and 35 degrees, preferably equal to about 30 degrees, and maximum value comprised between 35 and 50 degrees, preferably equal to about 43 degrees.

According to an aspect, the helmet comprises limit means for the restraining means.

According to an aspect of the invention, the limit means comprise a slot and a pin, the latter being adapted to be slidingly engaged in the slot. The pin is integral with the restraining means and the slot is integral with the padding element, or vice versa.

According to an aspect of the invention, the restraining element comprises a second seat to reversibly engage a respective second protrusion integral with the shell.

According to an aspect of the invention the padding element is a side cheek pad.

The present invention further concerns to a method for removing a helmet, according to one or more of the preceding claims, from the user's head, comprising the steps of:

(a) moving the restraining means from the first restraint position to the second disengagement position, so that the first protrusion can be released from the first seat;

(b) rotating the padding element with respect to the shell around the hinge point;

(c) taking off the helmet from the user's head.

According to an aspect of the invention, the steps (a) and (b) are carried out by applying a force onto the restraining means.

Referring to the attached figures, an exemplary and not limitative embodiment of the present invention is now introduced, in which:

- figure 1 is a schematic view of a helmet according to a possible embodiment of the present invention;

- figure 2 is an exploded view of a padding element, wherein the covering soft

portion has been omitted, and of a helmet shell portion to which the padding is constrained according to a possible embodiment of the present invention;

- figure 3 is a detail of figure 2, wherein the frame of the padding element and restraining means are shown; the lever of the restraining means is in the foreground for visualization convenience;

- figure 3A is a magnified and perspective view of the first seat of the padding element, in an upside-down position with respect to what shown in figure 3;

- figure 4 is a detail of figure 2, wherein the portion of the helmet shell to which the padding element has to be constrained is shown;

- figure 5 is a magnified and schematic view of the reversibly coupling means;

- figure 6 is a schematic view of the threaded element, in this case the female element, of the reversibly coupling means;

- figure 7 is a schematic view of the frame of the padding element with the restraining means in the first restraint position; the lower edge of the shell, the first and the second protrusions of the shell being schematically shown with dotted line;

- figure 7A is a detailed view of figure 7, wherein the restraining means and the first seat of the shell are particularly shown;

- figure 8 is a view similar to figure 7, but with the restraining means in the second disengagement position, before a relative rotation between the shell and the padding element happens;

- figure 8A is a detailed view of figure 8, wherein the restraining means and the first seat of the shell are particularly shown;

- figure 9 is a view similar to figure 8, but after a relative rotation between the shell and the padding element;

- figure 9A is a detailed view of figure 9, wherein the restraining means and the first seat of the shell are particularly shown;

- figure 10 is a schematic view of the frame of the padding element with the restraining means in the first restraint position, in an upside-down position with respect to figure 7;

- figure 11 is a schematic view of the frame of the padding element with the restraining means in the second disengagement position, in an upside-down position with respect to figure 8.

As known, a helmet 1 comprises a shell 2 to accommodate the head of a user. The shell 2 typically has a hollow shape adapted to accommodate the head of a user, can have a number of layers and, in particular, an outer rigid layer, for example made of polycarbonate or composite material, and an inner deformable layer, for example made of expanded polystyrene (EPS), and constitutes the "shell" of the helmet 1.

Inside the shell 2, the helmet has a plurality of padding elements 3 adapted to firmly keep the position of the user's head inside the helmet 1 and which are typically made of foam rubber, and with the shell, it concurs to damp possible impacts, for example in the event of an accident.

As mentioned, it is preferable that some padding element 3 are removable from the shell 2, not only to allow their cleaning or replacement, but also to facilitate the removal operations of the user's head from the helmet 1. In the following description reference will be made to a removable side cheek pad, which is the preferred embodiment of the present invention (also if not the only possible one).

It has to be noticed that here and in the following, with the term "side cheek pad" is meant the padding portion inside the helmet being shaped and arranged to be in contact with the cheek of a user of a safety helmet, when the latter is worn.

The padding element 3 is made in a way known in the art, and typically has a frame 3a, 3b and a soft cover 3c schematically shown in figure 5 and generally made of foam rubber. In particular, in the embodiment shown, the frame consists of two elements 3a, 3b typically made of plastics, which can be constrained to one another in a known way. Alternatively, the frame can be made in one piece. Generally, the frame 3a, 3b gives the mechanical characteristics to the padding element 3, i.e. it constitutes the supporting structure on which textile parts restraining the soft cover can also be sewn on, whereas the soft cover 3c (for example made of foam rubber) gives the damping feature against impacts and the user's comfort.

The helmet 1 further comprises reversibly coupling means 4a, 4b between the padding element 3 and the shell 2. Typically such reversibly coupling means 4a, 4b are of the male - female type, and can preferably provide a snap-fit coupling, i.e. an elastic interlocking coupling between substantially complementary shapes. In the embodiment shown, particularly referring to figures 1 and 5, the reversibly coupling means 4a, 4b comprise a male element 4a constrainable to the padding element 3, and a female

element 4b constrainable to the shell 2. However it is possible the opposite solution, i.e. the male element constrained to the shell and the female element constrained to the padding element 3.

Preferably, the shell 2 has at least one inner portion 2a made of foamed material, typically expanded polystyrene (EPS). The element of the reversibly coupling means 4a, 4b, that is constrainable to the shell 2, preferably has a threaded portion 41. According to an aspect of the present invention, it is preferred that the thread 42 of the threaded portion 41a has thread and pitch higher compared to standard screws. Particularly referring to figure 6, the preferred parameters for the thread 42 are listed below.

Preferably the thread 42 has variable depth H. Referring to the figures, the thread 42 has gradually decreasing depth H, with minimum value at the leading thread portion.

According to an aspect of the present invention, the ratio between maximum depth Hmax and pitch P of the thread 42 is comprised between 1.00 and 1.80, preferably between 1.20 and 1.60. A preferred value is equal to about 1.40. In particular, in the embodiment shown such a value is equal to 1,374.

The ratio between inner diameter Di and maximum depth Hmax of the thread 42 is preferably comprised between 0.15 and 0.5. More preferably, such a ratio is comprised between 0.15 and 0.35. A preferred value is equal to about 0.23. In the embodiment shown, such a value is equal to 0.228.

In general, as mentioned, the inner diameter Di is made as thin as possible so as to cause the deformation of the threaded portion 41 in case of helmet shock, while ensuring however to the thread a minimum structural resistance so that to allow the screwing thereof in the inner portion 2a of the shell 2.

Preferably the thread angle α is in turn variable. The minimum value of α is comprised between 25 and 35 degrees (preferably is equal to about 30 degrees), whereas the maximum value of α is comprised between 35 and 50 degrees (preferably is equal to 43 degrees).

In the shown example, Hmax is equal to 6.575 mm, P is equal to 4.79 mm, Di is equal to 1.50 mm.

In the embodiment shown, the inner portion 2a of the shell 2 has a removable plastic cover 2b. Such plastic cover 2b preferably comprises a housing 5 for the afore said element of the reversibly coupling means 4a, 4b, which is integral with the shell 2,

i.e. the female element 4b in the embodiment shown in the figures.

Analogously, also the frame 2a, 2b of the padding element 3 has a housing 6a, 6b for the other element of the reversibly coupling means 4a, 4b, which is integral with the padding element 3, i.e. the male element 4a in the embodiment shown in the figures.

As better explained below, the reversibly coupling means 4a, 4b form a hinge point 8 for the relative rotation between the shell 2 and the padding element 3.

The shell 2 further has a first protrusion 21 adapted to be engaged with a respective first seat 31 of the padding element 3. The first protrusion 21 is preferably constrained to the portion 2a of the shell 2 by a threaded portion 21a, whose features are similar to the threaded portion 42.

As mentioned, the padding element 3 has a first seat 31 designed to reversibly accommodate the first protrusion 21. In other terms, the engagement between the first seat 31 and the first protrusion 21 is such to allow at least one degree of freedom for the first protrusion 21, in order to permit the same to be disengaged from the first seat 31. Preferably, the seat 31 comprises an edge 31a visible in particular in figure 3A and adapted to engage the first protrusion 21; such an edge 31a defines, in section, an open figure, so that the disengagement of the first protrusion 21 from the seat 31 is allowed. Different typologies of open figures can be used, but typically the edge has a "U" or "C" shape.

More in detail, the edge 31a protrudes from a preferably flat surface 31b. The helmet 2 is designed so that, when the padding element 3 is engaged to the shell 2, there is no interference between the surface 31b and the first protrusion 21, whereas there is interference between the edge 31a and the protrusion 21. When the first protrusion 21 is pushed towards the edge 31a, the two elements contact each other, and the relative movement between the shell 2 and the padding element 3 is prevented. On the contrary, when the first protrusion is pushed against the missing portion of the edge 31a, the protrusion 21 does not meet obstacles and, therefore, can be disengaged from the seat 31 with a consequent relative movement between the padding element 3 and the shell 2.

According to an aspect of the present invention, the first seat 31 and the first protrusion 21 are designed so that an interference coupling can be made. Typically, the first protrusion 21 elastically deforms the seat 31 when introduced in the latter. Referring to the shown portion, the edge 31a is U-shaped and has at least one portion

with width smaller than the first protrusion 21, so that the protrusion 21 elastically deforms the edge 31 when the first one enters the second. Preferably, this prevents the padding element 3 from being disengaged from the shell in the usual operations for fitting-taking off the helmet. Such interference is usually mild, to prevent the removal operations of the padding element to become excessively complex, for example to carry out the conventional cleaning and washing activities of the soft padding 3b.

In the present description we referred to a "first" seat 31 and a "first" protrusion 21. This does not involve necessarily the presence of further seats and protrusions, even if at least one second seat 32 on the padding element 3, adapted to house a second protrusion 22 in the shell 2, is preferred. The second seat 32 and the second protrusion 22 are preferably shaped as the first seat 31 and the first protrusion 21, respectively. Therefore, the second seat 32 is designed to house the second protrusion 22 reversibly. The seats 31, 32 and the respective protrusions 21, 22 are placed on the shell 1 so that the shell 2 can be disengaged from the padding element 3 by a relative rotation between the two elements around the hinge point 8 defined by the afore said reversibly coupling means 4a, 4b.

The shell 1 further comprises restraining means 7 to restrain the first protrusion 21 in the first seat 31. Such restraining means 7 are designed so as to be movable between a first restraint position of the first protrusion 21 in the first seat 31 and a second disengagement position from the first seat 31. In the first restraint position (shown for example in figures 7 and 10), the restraining means 7 restrain the first protrusion 21 in the first seat 31 when the first one is inserted in the second. Analogously, if the restraining means are in the restraint position and the first protrusion 21 is outside the first seat 31, the entry of the first one into the second is not allowed. On the contrary, when the restraining means 7 are in the second disengagement position (shown for example in figures 8, 9 and 11), the first protrusion 21 is free to be disengaged from, and to be engaged with, the first seat 31.

In the embodiment shown, the restraining means 7 comprise a lever 71. The lever 71 is hinged to the padding element 3, or better to the respective frame 3a, 3b, and comprises an activating portion 71a and an engaging portion 71b. The activating portion 71a is adapted to be directly or indirectly activated by a user, to move the restraining means 7 between the mentioned restraint and disengagement positions. The engaging

portion 71b is adapted to prevent the protrusion 21 from disengaging from the first seat 31, when the restraining means 7 are in the restraint position. Referring to the previously described embodiment, shown in the figures, the engaging portion 71b is adapted to cooperate with the edge 31a, so that the open shape defined by the edge 31a itself is "closed".

The lever 71 is preferably a first-class lever. In other words, the lever 71 is hinged to the padding element 3 so that to rotate around a pin arranged between the activating portion and the engaging portion 71b. The pin may be made in a many ways. In the embodiment shown, the lever is provided with a protrusion 71c adapted to be rotatably engaged inside a respective housing 6c of the padding element 3. Alternatively, an outside pin can be constrained to the lever 71 and be inserted, in use, into the housing 6c. Furthermore, in a possible alternative, the lever can be provided with a housing and the padding element 3 with a respective protrusion. Otherwise, connecting means of different types (screws, rivets, etc.) could be used.

Preferably, as in the embodiment shown, a ribbon 72 can be constrained to the lever, so that a user can easily activate the lever 7. In particular, the ribbon 72 can be constrained to the lever 71 so that, in use, the ribbon projects below the shell 2. A string or the like can take the place of the ribbon 72. Alternatively, there could be no ribbon 72 and the user could operate directly on the engaging portion 71b of the lever 71.

The helmet 1 further comprises limit means 71d, 6d for the restraining means 7. Typically, such limit means 71d, 6d comprises a pin 71d designed so that to slide inside a respective slot 6d. In the embodiment shown, the pin 71d is integral with the restraining means 7, whereas the slot 6d is made on the padding element 3 (in particular on the frame 3a, 3b of the padding element 3). The opposite solution can be anyway provided, with a slot made on the restraining means 7 and a pin obtained on the padding element 3. When the restraining means 7 are coupled to the padding element 3, the pin 71d is inserted into the slot 6d, so that the rotation of the restraining means with respect to the padding element 3 is limited by the travel of the pin 71d inside the slot 6d.

In normal use conditions, the padding element 3 is constrained to the helmet, and the restraining means 7 are in the restraint position of the first protrusion 21 inside the first seat 31, as shown in figures 7 and 10.

When the helmet 1 has to be removed easily from the user's head, firstly the

restraining means 7 are activated so that they are moved from the restraint position to the disengagement position, as shown in figures 8 and 11. Thanks to this, the first protrusion 21 can be disengaged from the first seat 31. In particular, referring to the embodiment shown, a user activates the lever 71 by acting on the activating portion 71a by the ribbon 72. Therefore the engaging portion 71b is disengaged from the edge 31a of the first seat 31, thus allowing the first protrusion 21 to come out from the seat itself.

Then the user applies a further force onto the padding element 3 to rotate the latter with respect to the shell 2, around the hinge point 8. In a preferred embodiment, the user continues applying a force on the restraining means 7. In other terms, according to an embodiment, at the beginning a user applies a force on the restraining means to activate the latter and subsequently to rotate the padding element 3.

In this case, it has to be observed that between the afore said hinge point 8, defined by the reversibly coupling means 4a, 4b, and the force application point being the hinge point of the lever 71 to the padding element 3, the gap is non zero, i.e. an arm allowing an easy rotation of the padding element 3 around such a hinge point 8.

Referring also to figures 9 and 9A, in the embodiment herein shown, firstly a user pulls the ribbons 72 so that to activate the lever 71, as described above. In particular, the lever 72 rotates around the pin 71c by the angle allowed by the travel of the pin 71d inside the slot 6d. When the pin 71d reaches its own stop, the application of a force onto the lever 71 causes a rotation of the padding element 3 with respect to the shell 2 around the hinge point 8, as shown in the afore mentioned figures.

When the padding element 3 is rotated by a certain angle (typically about 90 degrees), the helmet can be removed from the user's head easily, as the padding element is not an obstacle.

In case the padding element 3 has to be removed completely from the shell 2, after the rotation of the padding element 3, a force can be applied onto the same element 3 along a direction in which the padding element 3 and the shell 2 moves away relatively, so that the detachment of the male element 4a from the female element 4b is caused by the reversibly coupling means 4.

When used in this specification and claims, the terms "comprises" and "comprising" and variations thereof mean that the specified features, steps or integers

2017210620 04 Aug 2017

are included. The terms are not to be interpreted to exclude the presence of other features, steps or components.

20172106620 25 Nov 2022

CLAIMS

1. Helmet comprising:

a shell for absorbing shocks,

a padding element removably constrained to said shell and provided with at least a first seat so that a respective first protrusion integral with said shell is reversibly engaged,

a reversible male - female coupling means to reversibly couple said shell and said padding element, which are adapted to define a hinge point for the relative rotation between said shell and said padding element, wherein said shell comprises the male element of said reversible coupling means and said padding element comprises the female element of said reversible coupling means, or vice versa;

restraining means to selectively restrain and release said first protrusion in and from said first seat;

wherein said restraining means are movable between at least:

a first restraint position, wherein said restraining means engage said first seat to restrain said first protrusion in said first seat, so that the relative rotation between said shell and said padding element around said hinge point is prevented;

a second disengagement position, wherein said restraining means are disengaged from said first seat to release said first protrusion from said first seat, so that the relative rotation between said shell and said padding element around said hinge point is allowed;

wherein said restraining means comprise a lever hinged to said padding element, said lever having an activating portion a user can activate to move said restraining means between said first restraint position and said second disengagement position, and an engaging portion adapted to engage with said first seat in said first restraint position.

2. Helmet according to claim 1, wherein said first seat comprises an edge having an open perimeter, which is preferably U-shaped, and said restraining means are designed so that, in said first restraint position, said perimeter of said edge is closed.

3. Helmet according to claim 1 or claim 2, wherein said reversible male - female coupling means are snap-fit coupling means.

201721062O 25 Nov 2022

4. Helmet according to any one of the preceding claims, wherein elastic elements are arranged to push said restraining means towards said first restraint position.

5. Helmet according to any one of the preceding claims, wherein said shell comprises a foam-made portion, and wherein said first protrusion and the male element or female element of the reversible-coupling means, which is integral with said shell, have a threaded portion for coupling to said foam- made portion.

6. Helmet according to claim 5, wherein said threaded portion has one or more of the following characteristics:

thread having variable depth (H), preferably a progressively decreasing one;

ratio, between maximum depth (Hmax) and pitch (P) of the thread of said threaded portion, comprised between 1.00 and 1.80, preferably between 1.20 and 1.60, more preferably is equal to about 1.40;

ratio, between inner diameter (Di) and the maximum depth (Hmax) of the thread of said threaded portion, comprised between 0.15 and 0.5, preferably between 0.15 and 0.35, more preferably is equal to about 0.23;

thread with variable thread angle (a), with minimum value comprised between 25 and 35 degrees, preferably equal to about 30 degrees, and maximum value comprised between 35 and 50 degrees, preferably equal to about 43 degrees.

7. Helmet according to any one of the preceding claims, comprising limit means for said restraining means.

8. Helmet according to claim 7, wherein said limit means comprise a slot and a pin, the latter being adapted to slidingly engage in said slot, said pin being integral with said restraining means and said slot being integral with said padding element, or vice versa.

9. Helmet according to any one of the preceding claims, wherein said padding element comprises a second seat to reversibly engage a respective second protrusion integral with said shell.

10. Helmet according to any one of the preceding claims, wherein said padding element is a side cheek pad.

20172106620 25 Nov 2022

11. Method for removing a helmet according to any one or more of the preceding claims from a user's head, comprising the steps of:

(a) moving said restraining means from said first restraint position to said second disengagement position, so that said first protrusion can be released from said first seat;

(b) rotating said padding element with respect to said shell around said hinge point;

(c) taking off said helmet from the user's head.

12. Method according to claim 11, wherein said steps (a) and (b) are carried out by applying a force on said restraining means.

20172106 20 04 Aug 2017

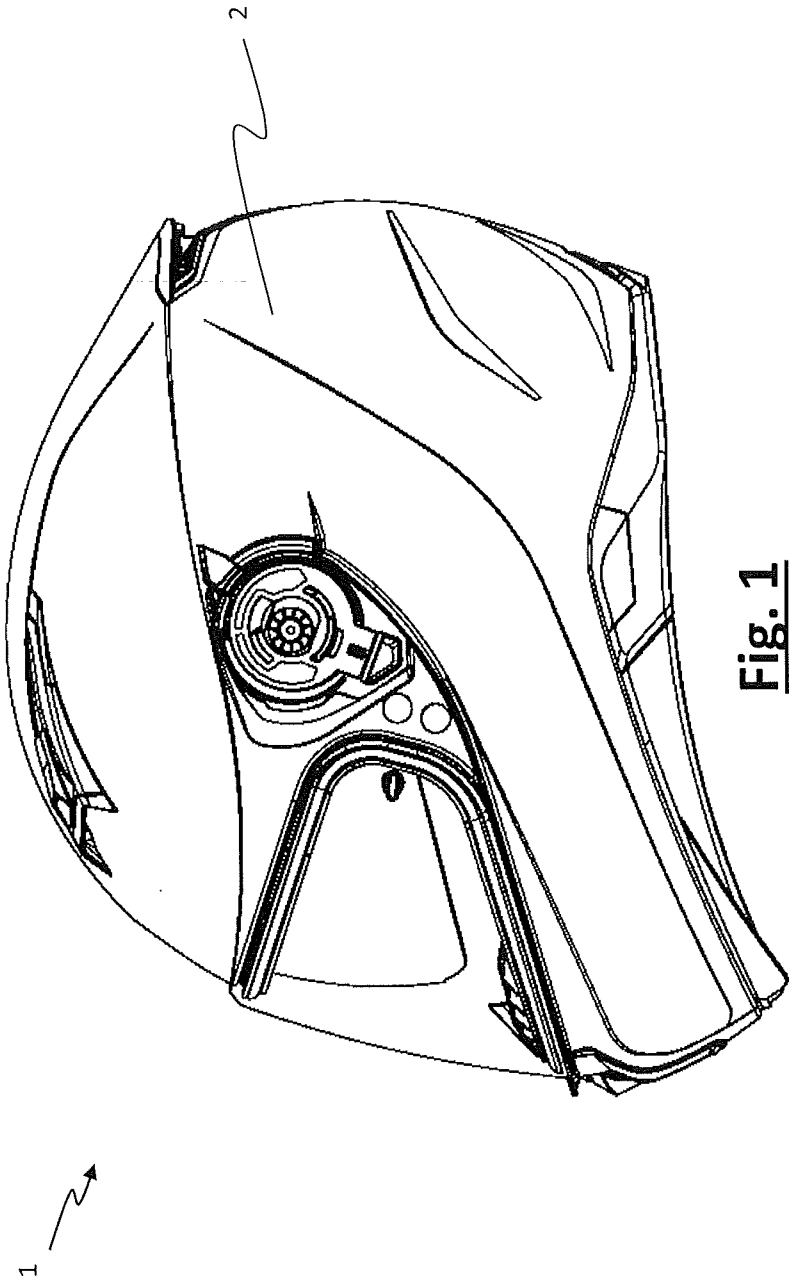

Fig. 1

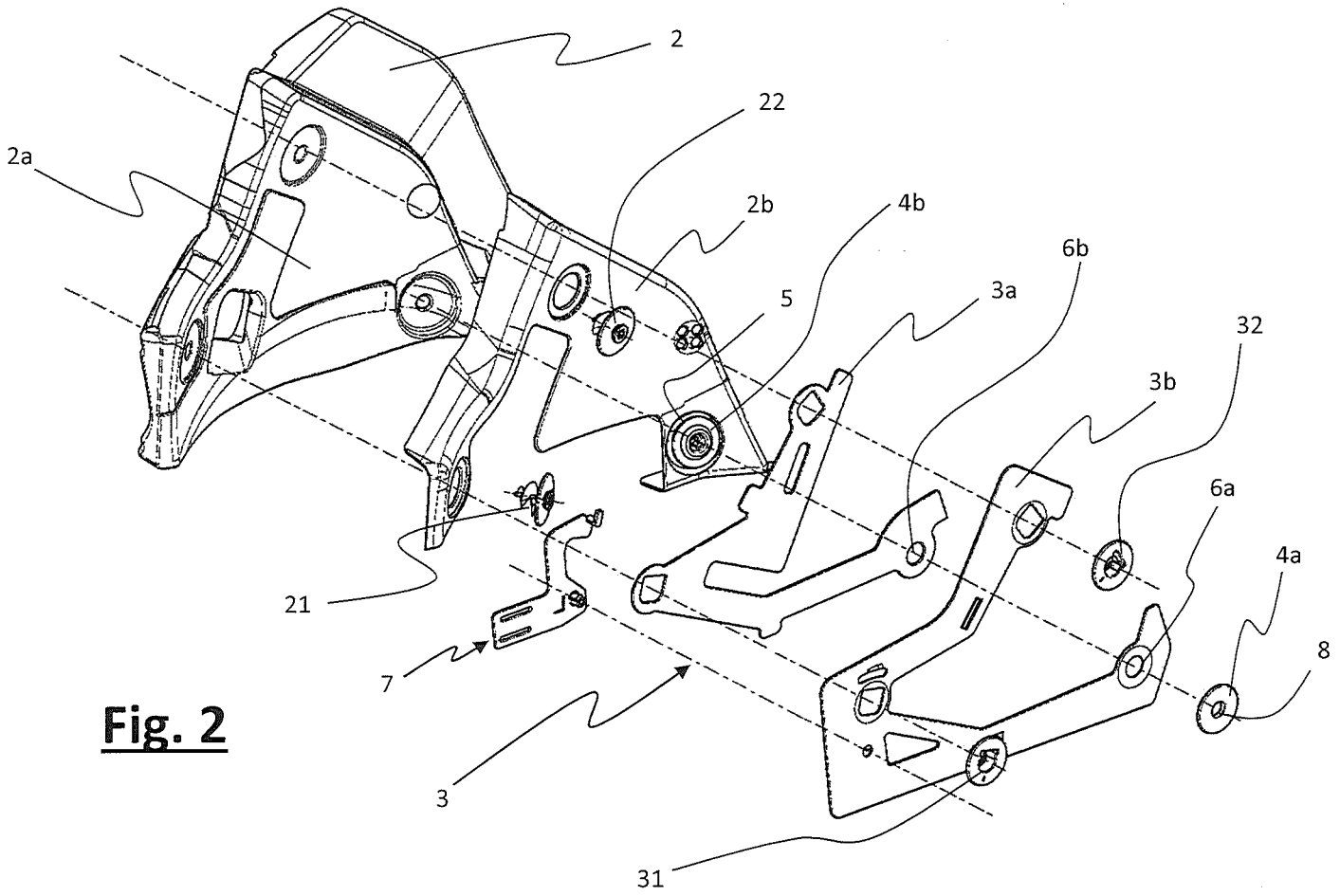

Fig. 2

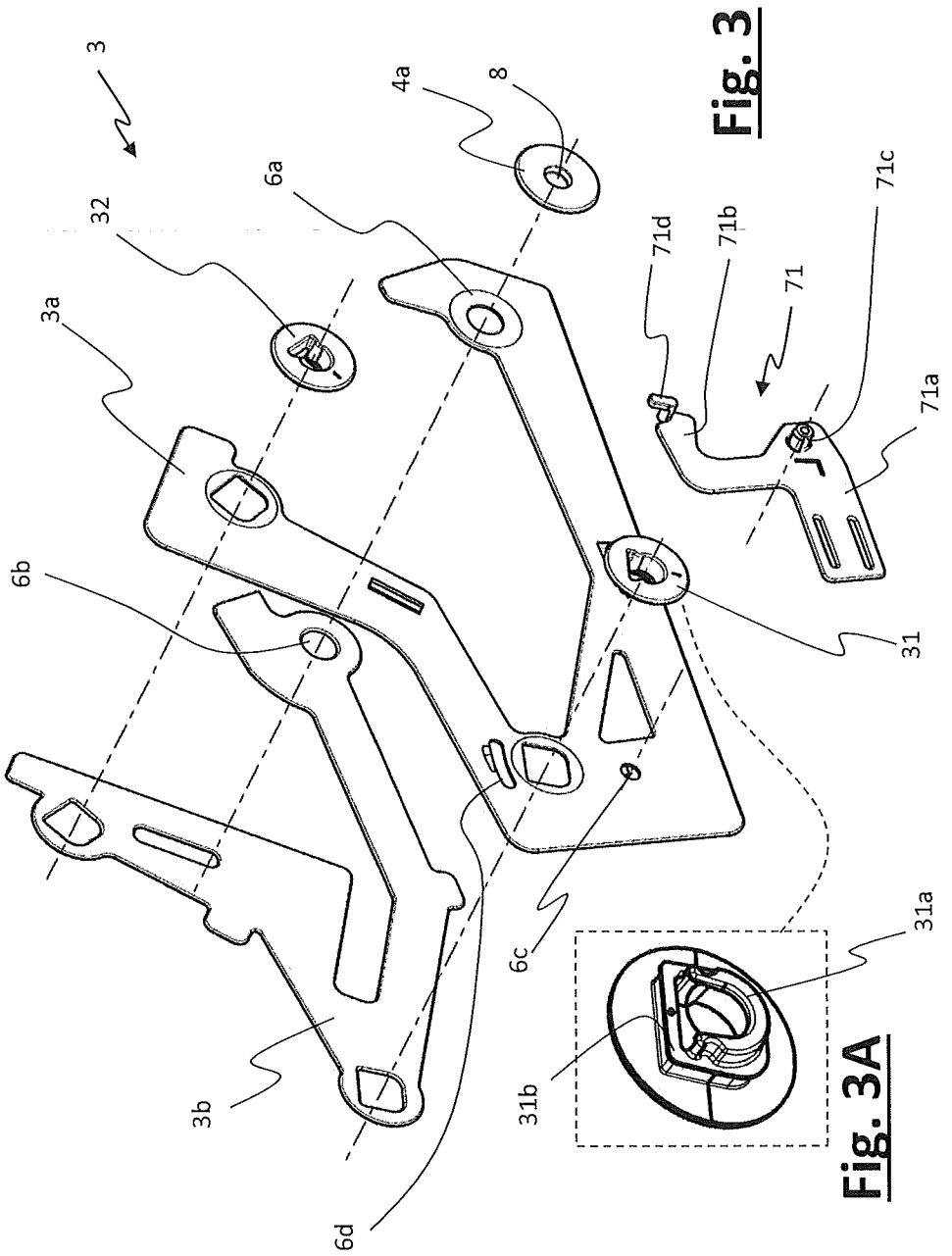

Fig. 3

Fig. 3A

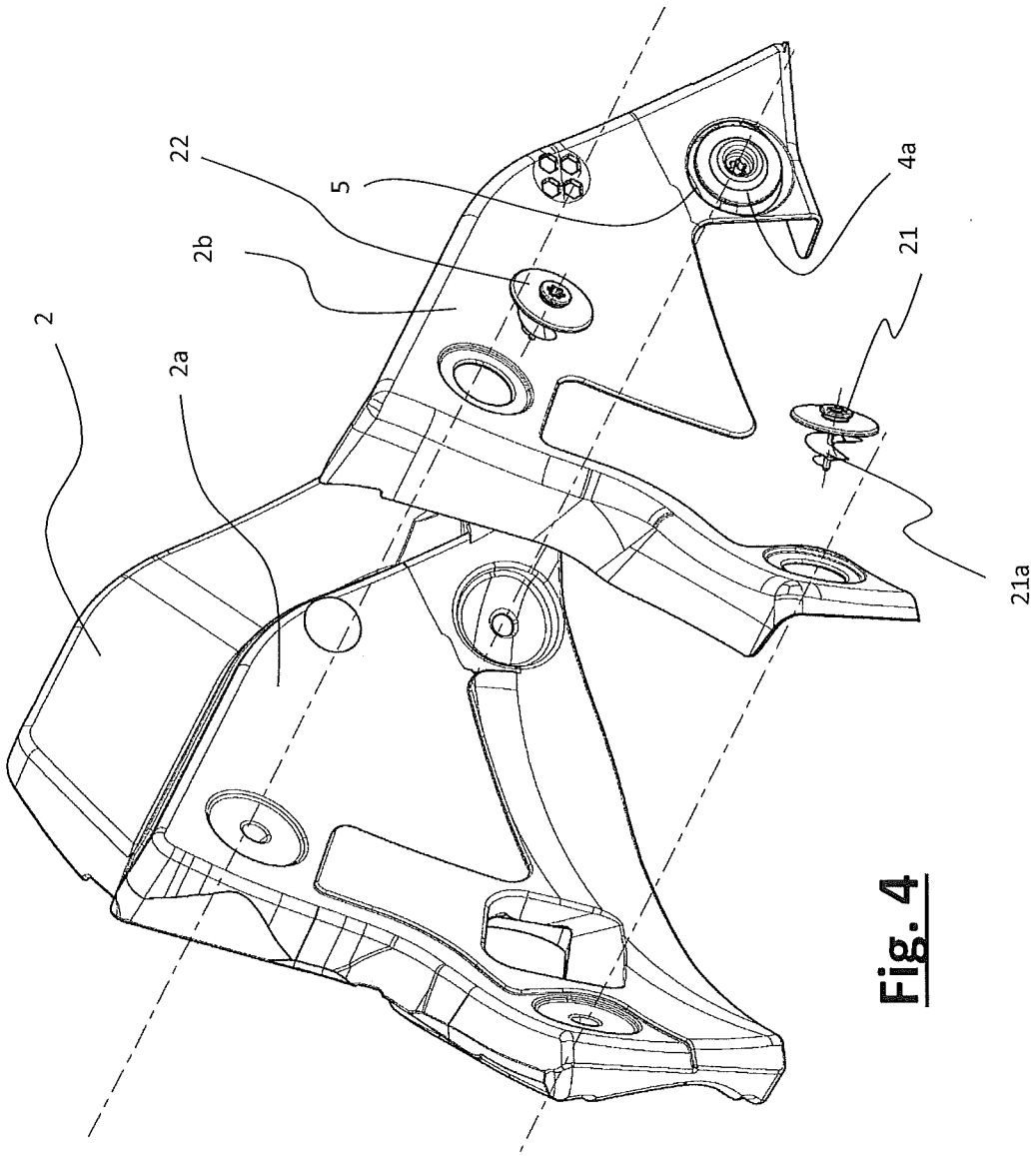

Fig. 4

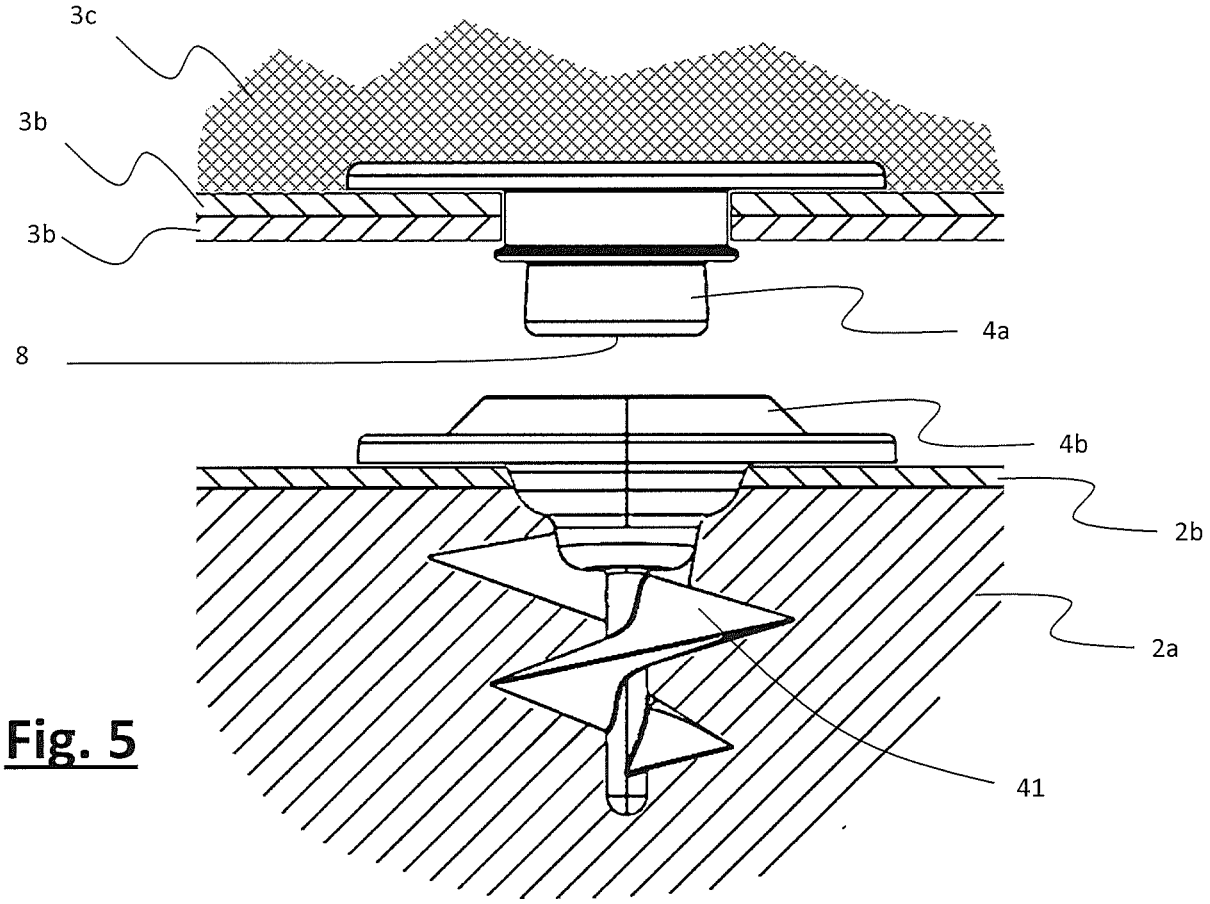

Fig. 5

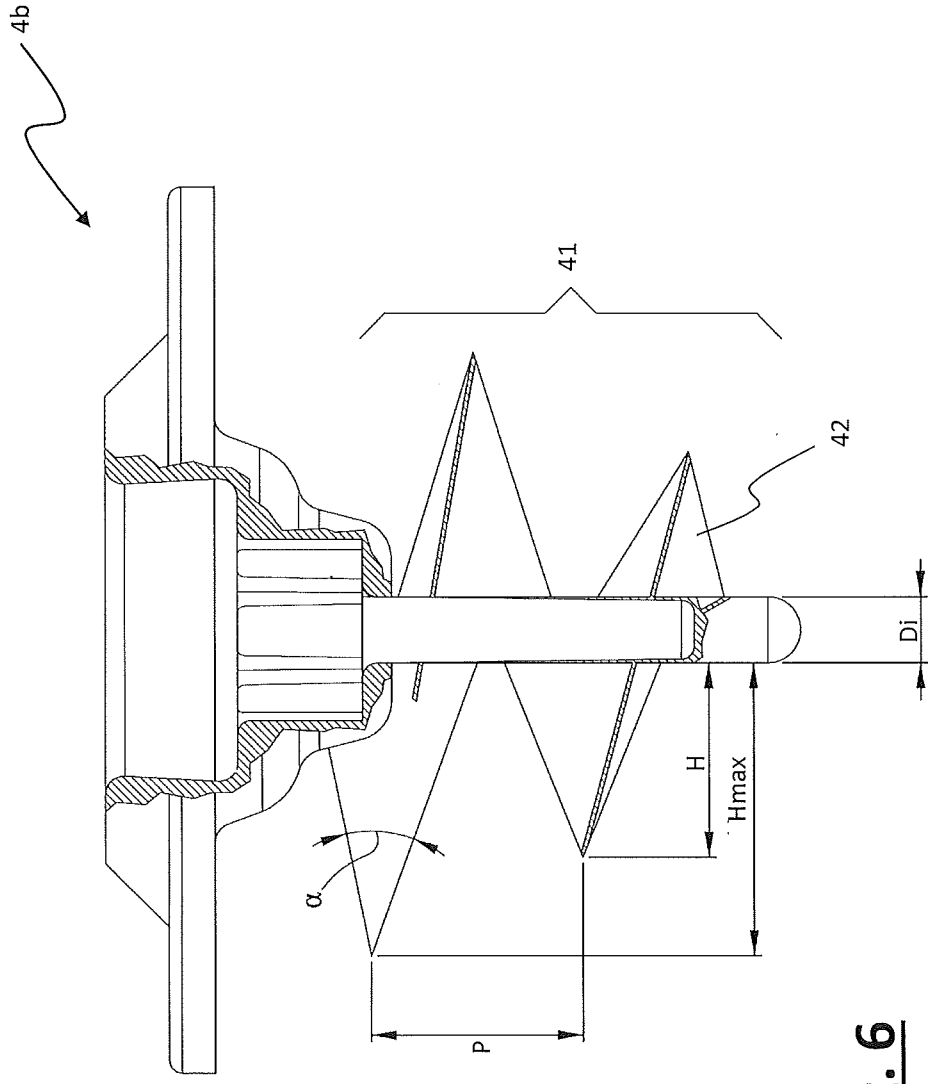

Fig. 6

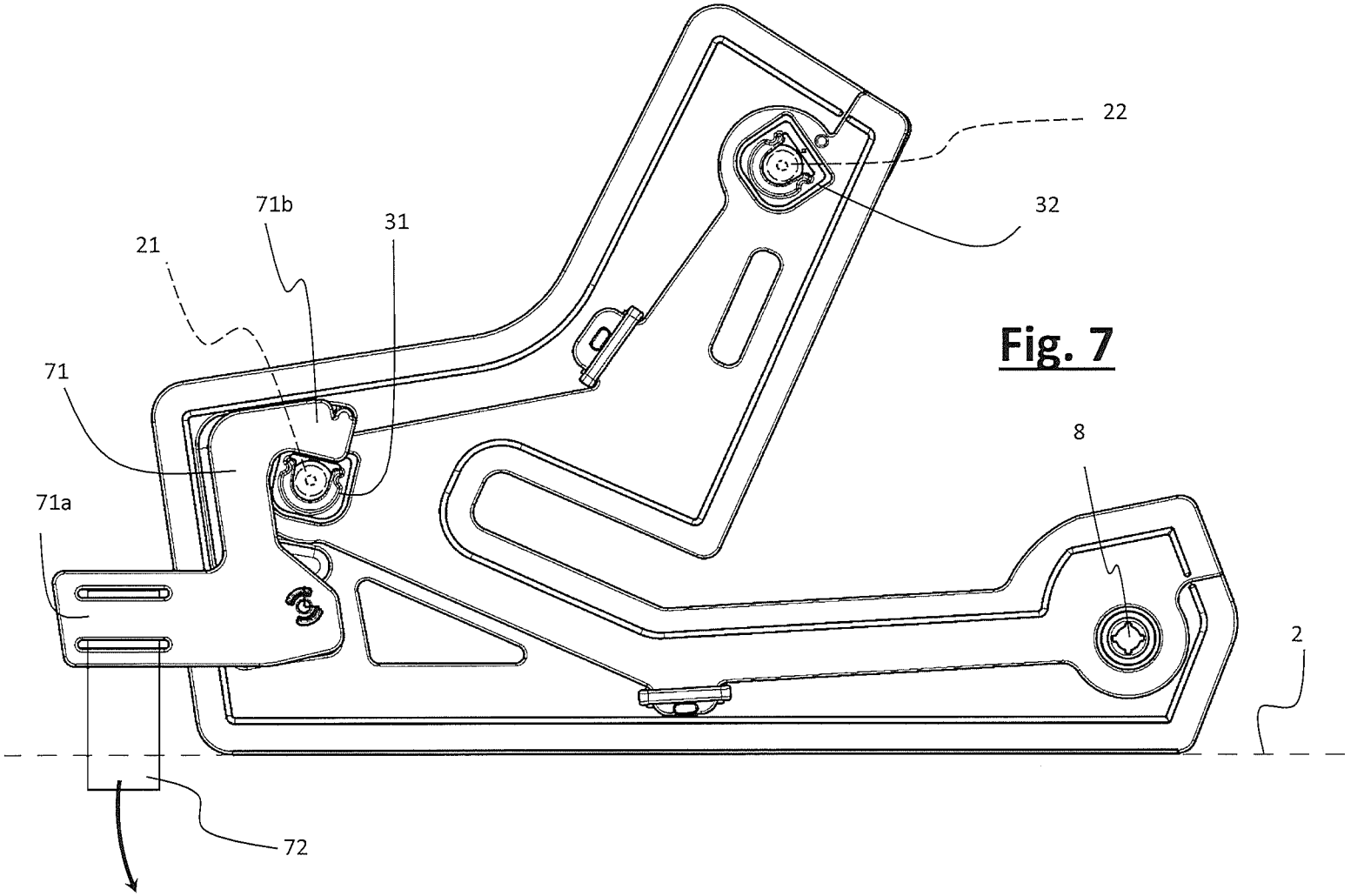

Fig. 7

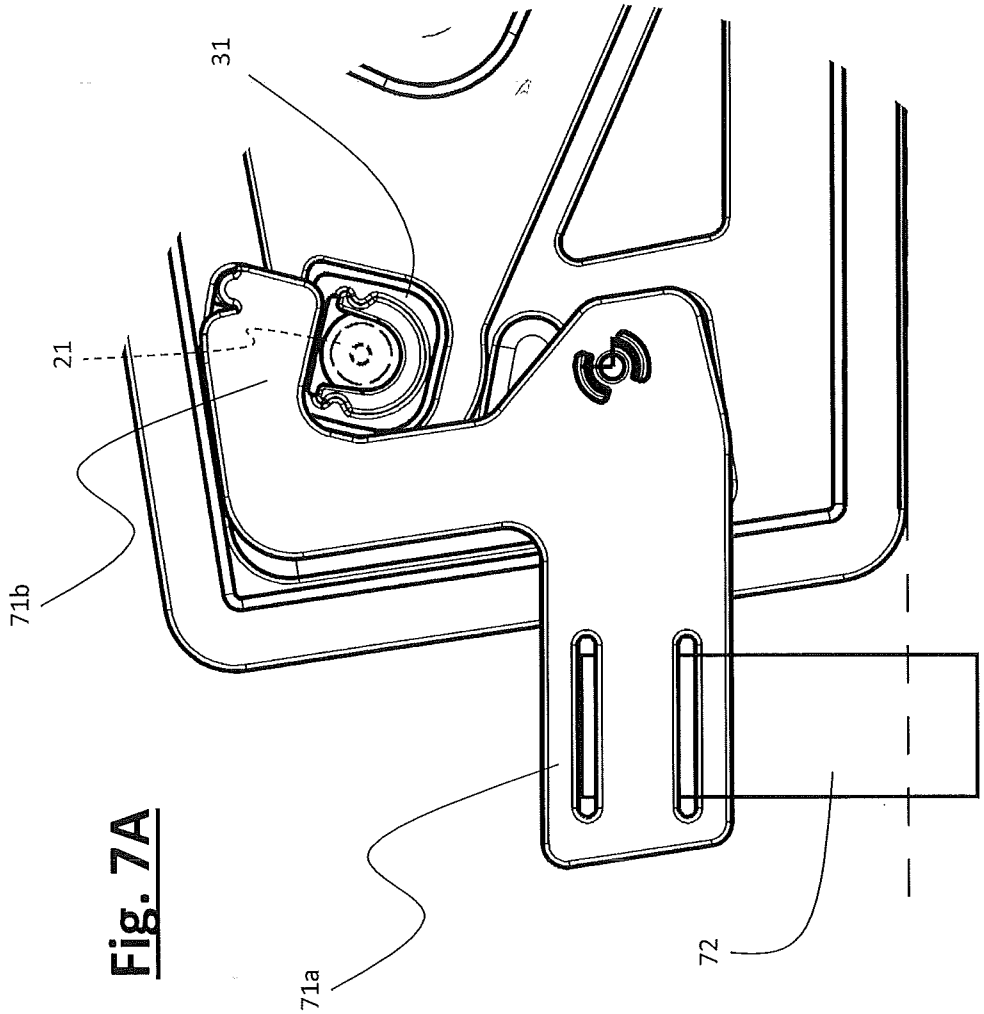

Fig. 7A

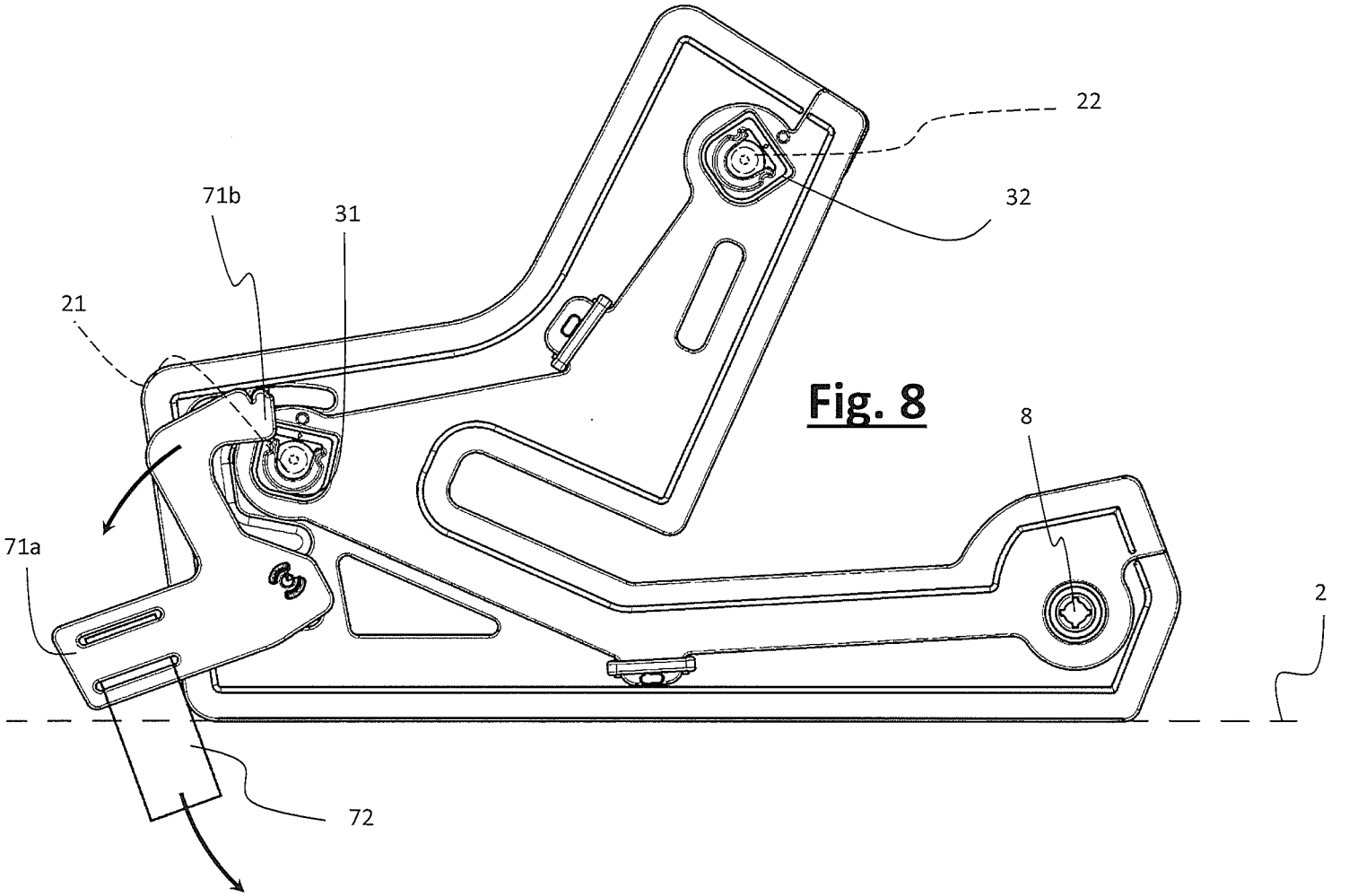

Fig. 8

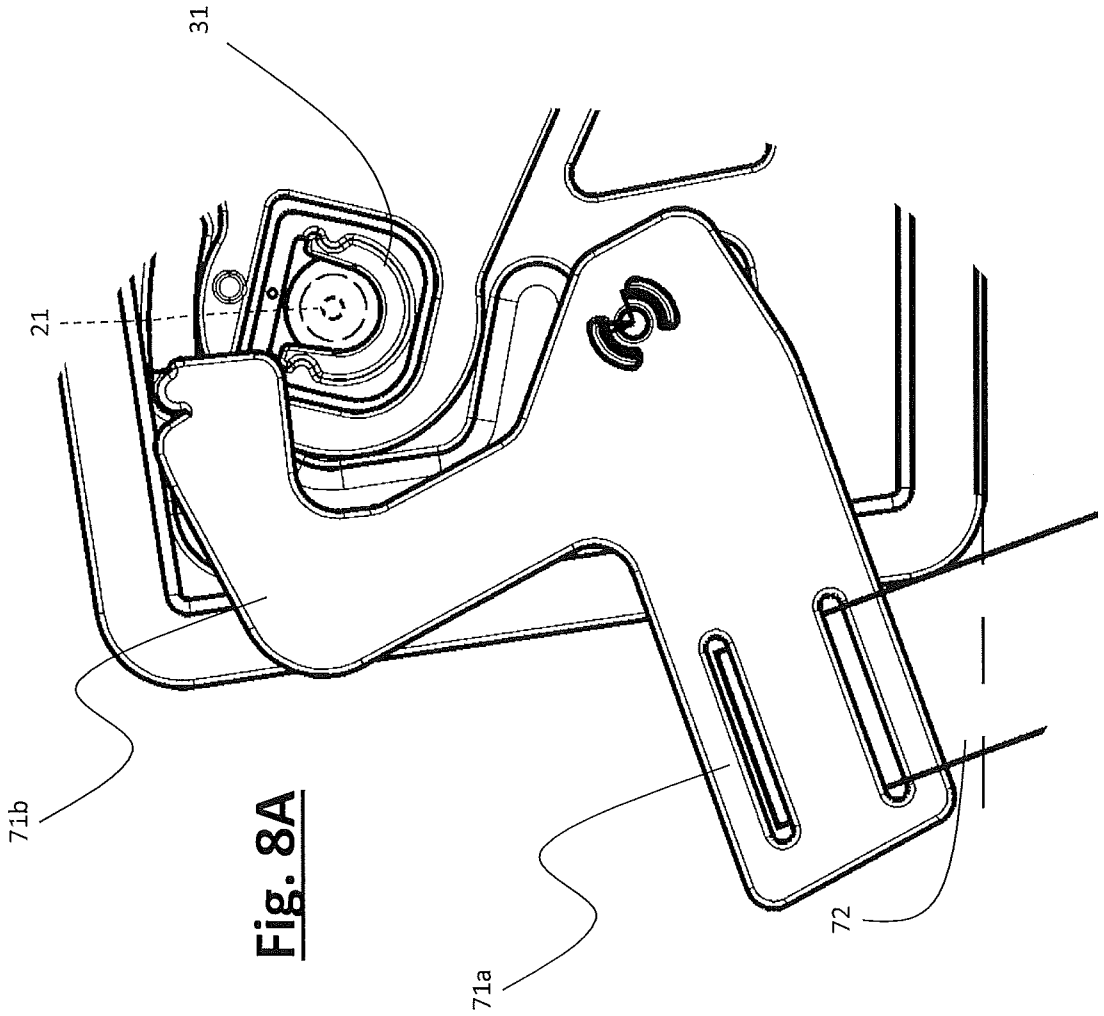

Fig. 8A

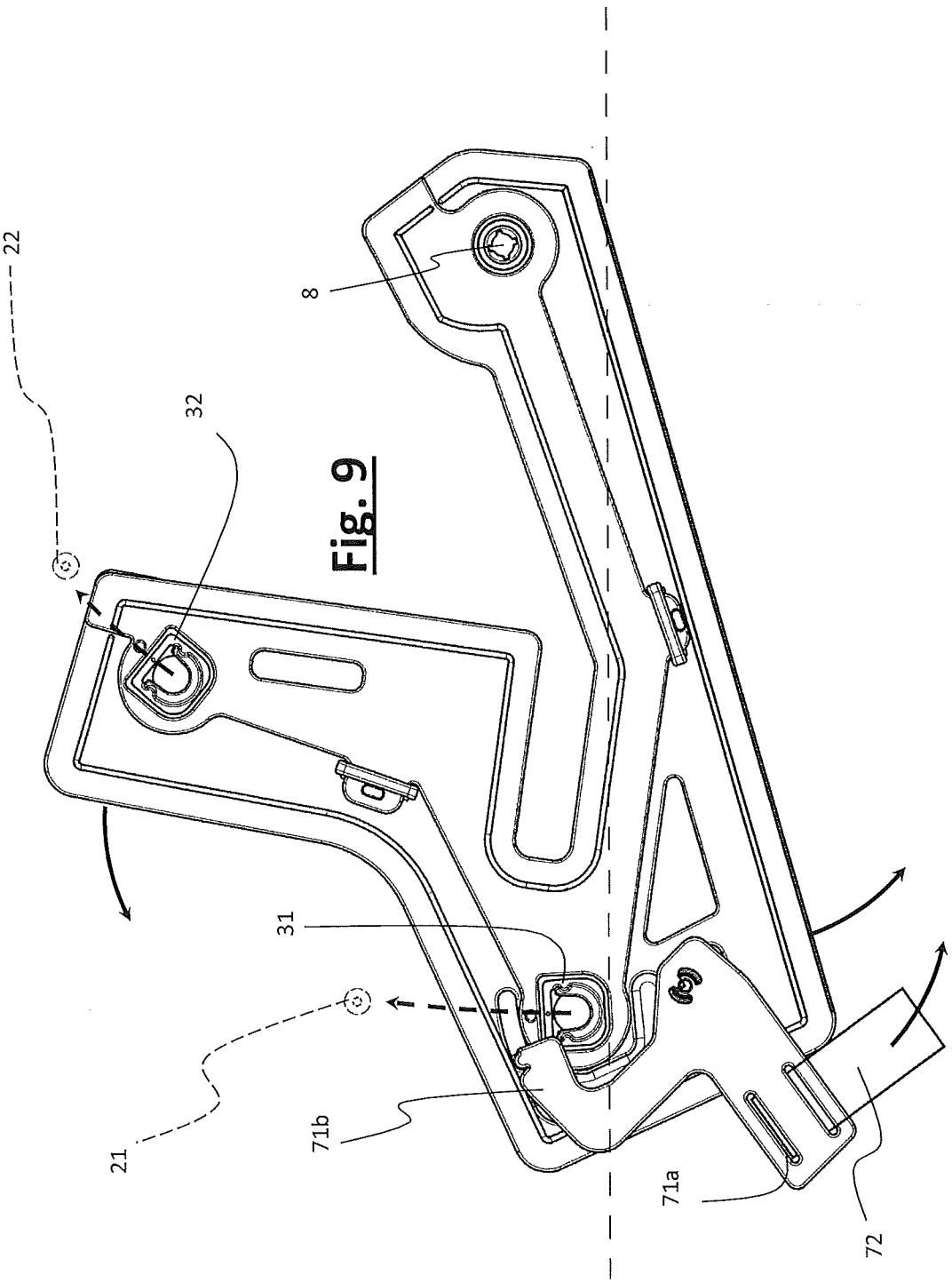

Fig. 9

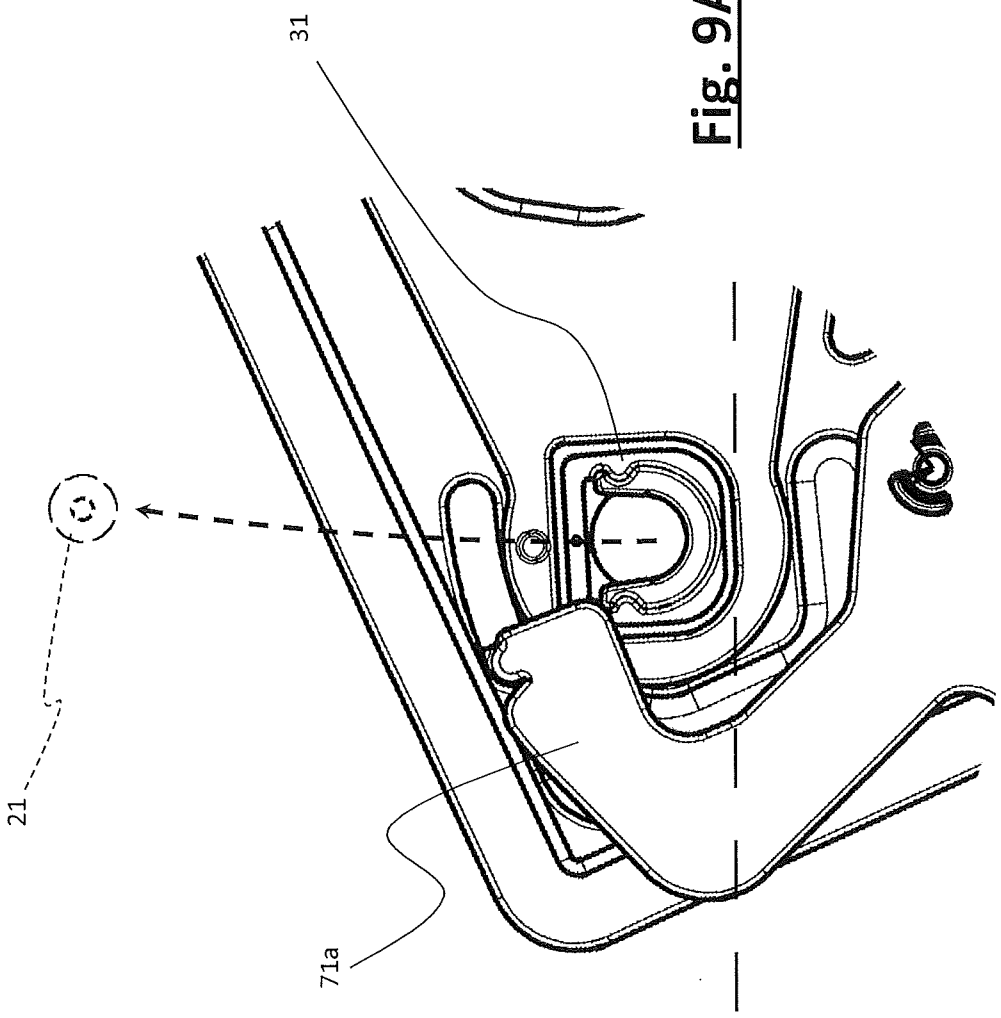

Fig. 9A

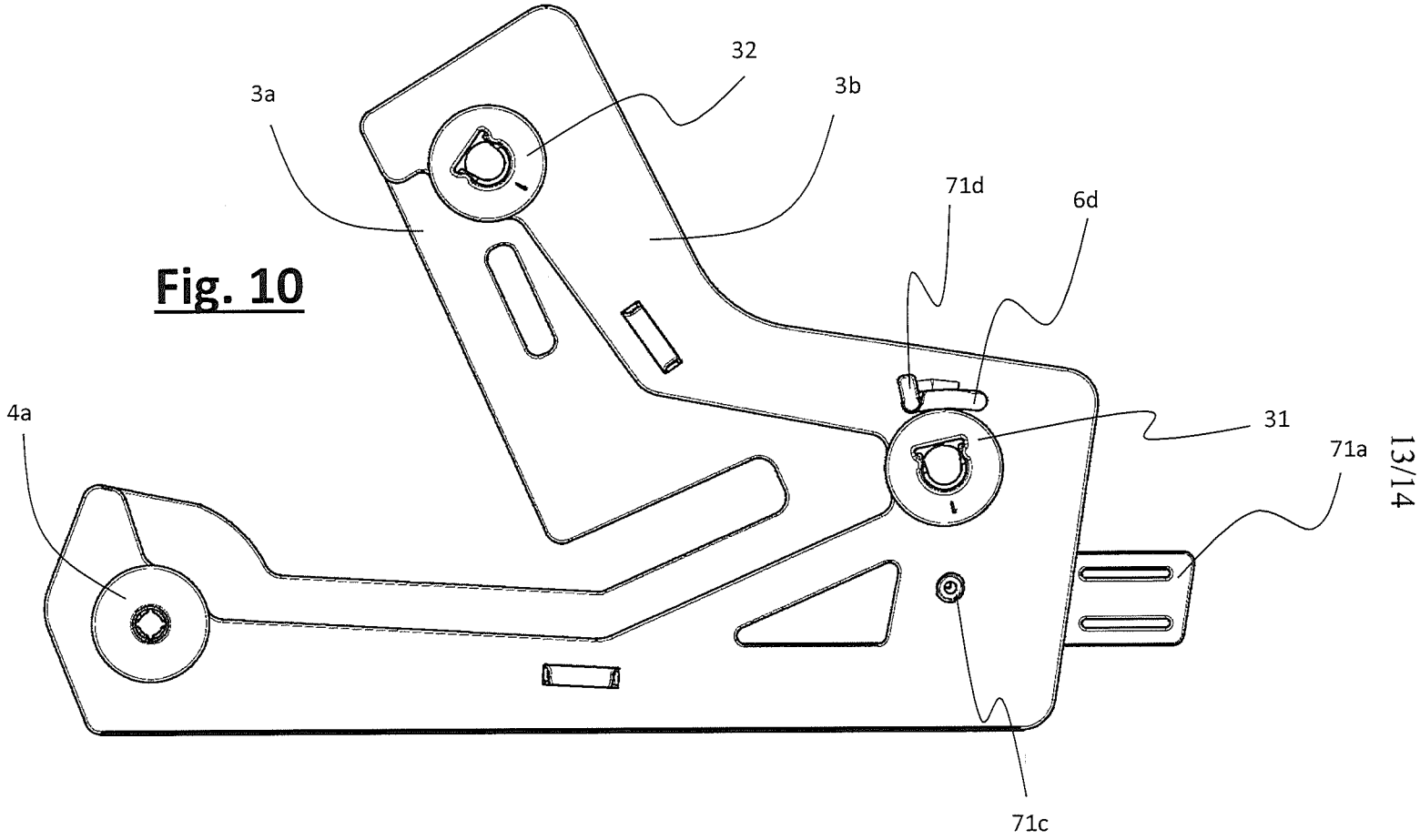

Fig. 10

Fig. 11

