May 12, 1964 C. F. McCAULEY 3,133,236

FILAMENT WINDING MACHINE CONTROL

Filed Oct. 9, 1961 2 Sheets-Sheet 1

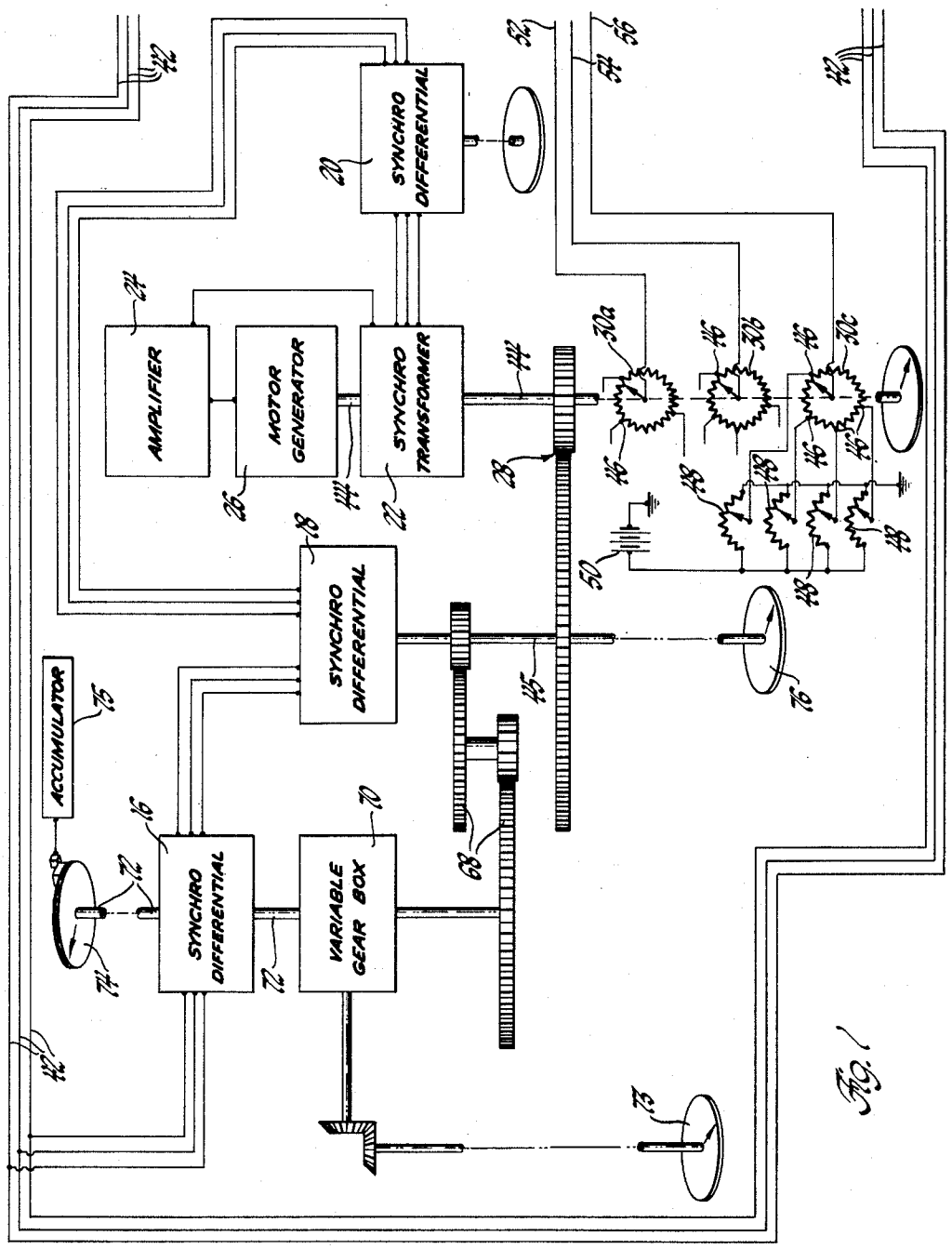

Fig. 1

INVENTOR.
Charles F. McCauley
BY
Paul J. Ethington
ATTORNEY

May 12, 1964 C. F. McCAULEY 3,133,236

FILAMENT WINDING MACHINE CONTROL

Filed Oct. 9, 1961 2 Sheets-Sheet 2

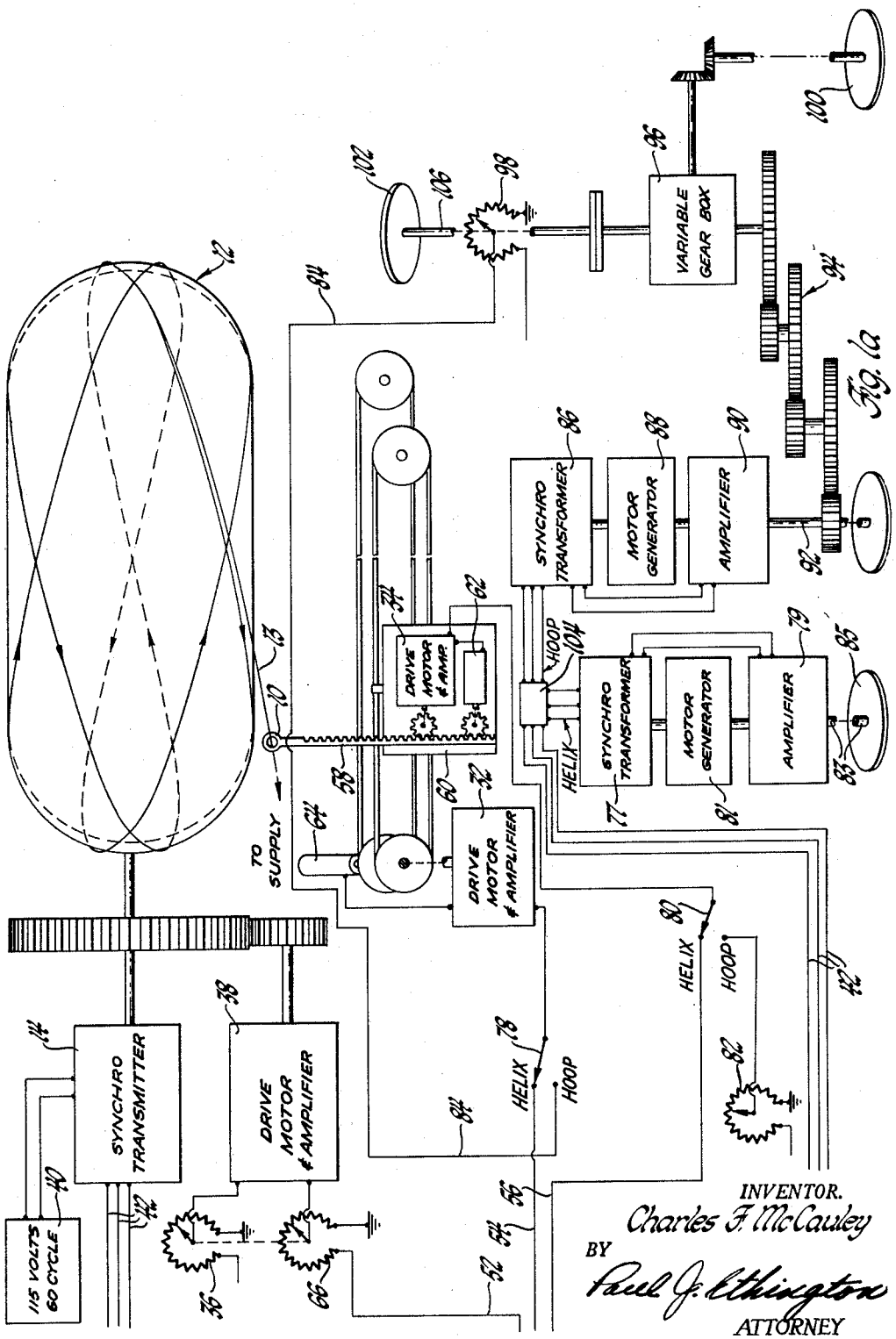

FIG. 12

INVENTOR.
Charles F. McCauley
BY
Paul J. Ethington
ATTORNEY

United States Patent Office

3,133,236

Patented May 12, 1964

1

3,133,236

FILAMENT WINDING MACHINE CONTROL

Charles F. McCauley, Speedway, Ind., assignor to General Motors Corporation, Detroit, Mich., a corporation of Delaware

Filed Oct. 9, 1961, Ser. No. 143,827
13 Claims. (Cl. 318—19)

This invention relates to control systems for winding apparatus and, more particularly, to electronic control systems for accurately controlling a dependent winding motion responsive to an independent winding motion.

In a system for winding a wire or filament in a particular pattern around a cylindrical mandrel which is used as a base to form a vessel of particular geometry, it is required to move the feed eyelet mechanism for the wire or filament along the mandrel in a manner which is related to the position of rotation of the mandrel itself. This concept considers the angular motion of the mandrel as an independent variable while the motion of the feeding mechanism in the dependent variable.

This device is designed to generate analog command signals to control the accurate winding of filament or wire vessels on a rotating mandrel. These commands, which are generated in accordance with the angular positions of the mandrel, are used to position the delivery eyelet and vary mandrel speed with control loops having feedback elements which are compatible with the commands.

In accordance with this invention, an accurate system which is adjustable over the desired operating range for a particular winding pattern is provided. This is accomplished by generating the ratio between mandrel revolutions and feed mechanism cyclic movements, herein referred to as the basic wind ratio, with hard gearing to provide differential feedback and also introducing the lead rate differentially.

In this invention, the dependent movement of the feed mechanism is made an accurate and adjustable function of the independent mandrel rotation by driving a command function generator in accordance with the mandrel rotation to supply signals to the motor-amplifiers of the feed carriage.

This invention also provides means to vary the speed of winding over various portions of a single cycle according to a predetermined plan. This is accomplished through the use of function generators whose output programs may be varied by changing the settings of a plurality of potentiometers.

Means also are provided to produce a winding of either a shallow lead "hoop" pattern or a broad lead "helix" pattern according to the desired properties of the vessel being wound. This is accomplished by providing two command function generators which may be separately switched into the control systems to the feed mechanisms.

This invention also provides indicating means to show both the number of layers of filament applied as well as the completed portion of a single layer being applied. This is accomplished through the use of synchro-differentials whose shaft rotations are certain different functions of the independent mandrel rotations.

Referring to the drawings, FIGURES 1 and 1*a*, there is illustrated a particular embodiment of this invention in a system for controlling the movements of a filament feed eyelet **10** as a function of the angular position of a rotatable mandrel **12** on which a wire or filament **13** is to be wound in a predetermined pattern. To provide a particular winding pattern, the filament feed eyelet **10** is to be moved through a prescribed number of cycles from one end of the mandrel **12** to the other during a prescribed number of mandrel revolutions. A synchro-transmitter **14** is driven directly by the mandrel **12** to send signals in accordance with the angular position of the mandrel **12**

2

through synchro-differentials **16**, **18** and **20**, whose functions are to add or subtract an increment to the signal from the transmitter **14**, to a synchro-transformer **22**. An error signal generated in the transformer **22** is applied to the amplifier **24** and motor gear train **26** which tries to keep the transformer in correspondence with the synchro-transmitter **14**. As the transformer **22** turns, the synchro-differential **18** is turned by the basic ratio gearing **28** such that a certain portion of the transmitter **14** signal is subtracted from the input to the transformer **22**. Thus a certain number of revolutions of the transmitter **14** results in a certain smaller number of revolutions of the transformer **22**. The function generators **30*a***, **30*b***, **30*c***, which are synchronously rotated with the transformer **22**, supply signals to the drive motors **32** and **34** which position the filament feed eyelet **10** both axially and radially with respect to the mandrel **12**. Since a certain number of mandrel revolutions act to send signals to move the feed eyelet **10** through a certain different number of cycles, the basic wind ratio is accomplished.

Considering the circuit in greater detail, the mandrel **12** is controlled to run at any desired speed by the speed selector potentiometer **36**, which is connected to the drive motor and amplifier **38**. A synchro-transmitter or selsyn generator **14**, which is driven directly by the mandrel **12**, employs a single phase rotor, which is energized by the source **40**, and a three-phase stator, the output of which is connected to the conductors **42**. As the mandrel **12** is rotated, the rotor of the synchro-transmitter **14** is rotated and three-phase voltages are induced in the stator which are representative of the angular position of the rotor. The three-phase voltages from the stator of transmitter **14** are then applied by means of the conductors **42** to the three-phase rotor windings of the synchro-differential **16**. The output of the three-phase stator of the differential **16** is connected similarly through the rotors and stators of the differentials **18** and **20** to the stator of the synchro-transformer **22**. The synchro-transformer **22**, having a three-phase rotor and stator, generates an error voltage which varies in proportion to the angle between the stator field and the axis of the rotor. This error signal is applied to an amplifier **24** and a motor and gear train **26** such that torque proportional to the error voltage is generated by the motor **26** which turns a shaft **44** connected to the transformer rotor in an attempt to maintain a transformer null, that is, correspondence between the stator field and rotor axis.

For illustrative purposes, assume a basic wind ratio of four mandrel revolutions to three cycles of eyelet movement. Rotation of the transformer **22** rotor acts through shaft **44**, the basic ratio gearing **28**, and shaft **45** to turn the basic ratio differential **18** one revolution for each three revolutions of the transformer **22** rotor. Since the three-phase input from the transmitter **14** is to the rotor of the synchro-differential **18**, the output is taken from the stator thereof and is proportional to the angular difference between the stator field and the rotor of the differential **18**. An external force imparting motion to the rotor can either add or subtract from the output depending on the particular wiring configuration and the direction of the rotor motion. In this case the differential **18** is wired so that the motion of the rotor obtained through the basic ratio gearing **28** subtracts one-fourth of the input signal to the rotor of the differential **18** from the output obtainable from the stator windings. Thus the signals obtained from four revolutions of the mandrel **12** and the synchro-transmitter **14** appear at the output of the differential **18** as having been obtained from only three revolutions of the synchro-transmitter **14**.

Rotation of the shaft **44** establishes the phasing of three function generators **30*a***, **30*b*** and **30*c*** which furnish signals to the drive motor and amplifier sets **32** and **34** to

control the movement of the filament feed eyelet. One revolution of each function generator results in one cycle of eyelet movement. Therefore, four cycles of the mandrel **12** result in three cycles of the filament feed eyelet **10** and the basic 4:3 ratio has been achieved. As previously mentioned the 4:3 ratio is not meant to be a limiting figure as the wind pattern will depend on the particular vessel to be wound. The ratio could be set at 5:4 by substituting a basic ratio gearing of 4:1. If this were the case five revolutions of the mandrel **12** would result in four cycles of eyelet **10** movement.

Considering the function generators **30***a*, **30***b* and **30***c* in further detail, each function generator is a 360° potentiometer with a plurality of taps **46**. Only four taps per generator are shown in the drawing to avoid confusion, but it is to be understood that a greater number of taps will probably be used to make the output functions more smooth. These taps **46** go to the wipers of a number of potentiometers **48** which are wired across a D.C. reference voltage **50**. Here again, to conserve space, only the function generator **30***c* is shown as connected to the potentiometers **48**, but it is to be understood that each of the generators **30***a* and **30***b* will also have an associated set of potentiometers. The potentiometers **48** may then be used to determine the voltage applied to the wipers of the 360° potentiometers **30***a*, **30***b*, **30***c* as a function of the angular position of the wipers which are rotated on the shaft **44**. This analogous to an electric cam with a number of independent chords. The output taken from the 360° wiper of the function generator **30***c* is connected by means of the single phase conductor **56** and switch **80** to the drive motor and amplifier **34** to control the radial motion of the boom **58**. A feedback potentiometer **62** meshing with the boom rack returns a boom position signal to the motor-amplifier **34** making a system which will position the boom **58** according to the signal from the function generator **30***c*. The general shape of this function is such that the boom **58** is withdrawn while traversing the cylindrical section of the mandrel **12** and is extended upon reaching the end of the mandrel **12** to wind the filament over the end of the mandrel **12**. The output for the 360° wipers of the function generator **30***b* is connected via conductor **54** and switch **78** to the drive motor and amplifier **32** to control the movement of the filament feed eyelet carriage **60** axially along the mandrel **12**. A feedback potentiometer **64** driven by a chain from the carriage **60** returns a carriage position signal to the motor-amplifier **32**, making a system that will position the carriage **60** according to the signal from the function generator **30***b*. The general shape of this function is to move the carriage **60** fast down the cylindrical section of the mandrel **12** and decelerate at the end to allow the mandrel **12** to roll over 180° thus winding the dome. The carriage **60** then accelerates and passes fast down the cylinder to the other end of the mandrel **12**. The function generator **30***a* is connected by means of a conductor **52** to the speed modulation potentiometer **66** which is connected to the drive motor and amplifier **38**. This function generator **30***a* is not imperative to the operation of the machine but is used to speed up the mandrel as each end is being wound to result in a speeding up of the overall process rate.

It is necessary to introduce a lead into the wind to prevent the filament **14** from overlapping at the completion of the fourth revolution of the mandrel **12**. This lead is generated by gearing down the basic ratio gearing **28** through gears **68** and an adjustable gear box **70** to the shaft **72** which is connected to the rotor of the differential **16** and acts in a manner similar to the differential **18** to add or subtract a small amount to the mandrel transmitter signal. This addition disturbs the basic 4:3 ratio by an amount controlled by the ratio of the gear box **70**. This rate may be adjusted by a lead rate adjustment **73** which is connected to the adjustable gear box **70**.

From the standpoint of quality control, it is desirable to apply an integral number of layers of filament to avoid partial layers which add weight and cost, but do not contribute to vessel strength. For the discussion a sheath will be set of layers as generated when the basic wind has "revolved" about the vessel one revolution. In the case of a basic wind of 4:3, a sheath would be three pairs or six layers of filaments. The generation of a full sheath has no particular relationship to mandrel **12** rotation or carriage **60** cycling since the lead rate is an operator controlled variable. The shaft **72** of the lead introduction synchro-differential **16** does, however, turn one revolution to cause the basic wind to advance one revolution of the mandrel **12**. Thus the differential shaft **72** becomes directly a sheath indicator **74**, and should include a digital accumulator **75** to tell how many sheaths have been applied.

If some disturbance has occurred during the winding process, causing an offset of the winding pattern, this offset may be removed with the differential **20** by rotation of the rotor in a desired direction to add or subtract somewhat from the signal applied to the synchro-transformer **22**.

Since the basic wind ratio (4:3) is generated differentially, the shaft of the synchro-differential **18** turns one revolution for a full wind, irrespective of wind ratio. For this reason, the wind position indicator **76** is attached to the shaft of the differential **18**. The indicator **76** is an indication of the portion of a single winding which is completed.

The output of the transmitter **14** is also connected via conductors **42** and switch **104** to a synchro-transformer **77** and the associated amplifier **79** and motor generator **81** which function like the previously described set **22**, **24**, **26**. This rotor shaft **83** of the transformer turns in exact synchronism with the mandrel **12** and thus the indicator **85** is used to determine the position of the mandrel **12** during the helix winding process.

The winding apparatus thus far described is particularly useful as a machine for winding pressure vessels. The mandrel **12** is used as a base for the vessel and may be melted or dissolved later. The winding pattern required for a particular vessel is dependent on the geometry of the vessel and its openings, however, an example of the winding patterns for the mandrel **12** is as follows: The mandrel **12** turns through 60° during movement of the eyelet **10** along the cylindrical section of the mandrel **12**, 180° during winding of the end dome, 60° in returning along the cylinder, and 180° across the other dome. The mandrel **12** has thus rotated 480° while the axial movement of the eyelet **10** has completed one cycle or 360°. This pattern is the result of the particular use of the 4:3 ratio.

The general type of wind previously described produces a cylindrical section which is low in loop strength. This inadequacy may be compensated for by applying layers of hoops along the cylindrical section of the vessel on top of the completed helix winds. Switches **78** and **80** are provided to disconnect the drive motor and amplifier sets **32** and **34**, respectively from the function generators **30***b* and **30***c*. The boom position drive motor and amplifier **34** is thus connected by means of the switch **80** to a potentiometer **82** which applies a steady voltage to the motor and amplifier **34** to hold the boom **58** in a certain position over the entire cycle. Switch **78** is moved to connect the carriage position motor and amplifier **32** by way of conductor **84** to a source of signals which will generate a shallow lead effect causing the carriage **60** to move slowly along the cylinder as the mandrel **12** turns. This new source of signals includes a synchro-transformer **86** and motor generator set **88** similar to those previously designated at **22** and **26**, respectively. The synchro-transmitter **14** applies three-phase signals to the stator of the transformer **86** by means of conductors **42**, which generates an error signal to be applied to the motor generator

88 through an associated amplifier 90. The motor 88 turns the transformer rotor in an attempt to maintain a transformer null. Thus the shaft 92, which is connected to the transformer rotor, is turned directly in proportion to the rotation of the mandrel 12 with no portion of the signal being subtracted as was previously the case. The rotation of the shaft 92 is geared down through gears 94 and the adjustable gear box 96 to drive a carriage demand potentiometer 98 which is connected through the switch 78 to the carriage position motor 32. The signals from the potentiometer 98 cause the carriage 60 to be moved slowly along the cylinder as the mandrel 12 turns. The rate of lead is readily adjustable by means of the lead rate adjustment 100 which varies the ratio of the adjustable gear box 96. A mandrel position indicator 102 may be provided on the shaft 106 if desired. To avoid applying the signal from the transmitter 14 to the transformer 22 when the hoop winding is being produced, a switch 104 is provided between the transformer 86 and the transmitter 14.

The operation of the machine is as follows: The setting of the function generators 30*a*, 30*b*, 30*c* and the basic ratio gearing 28 are selected to give the desired winding patterns. The potentiometer 36 is then set such that the mandrel 12 rotates at the proper speed. Switches 78, 80, 104 are placed in the "helix" positions and the machine is operated with the proper filament lead being determined by the setting of the lead rate adjuster 74. When the accumulated reading of the sheath indicator 74 and 75 indicates that the vessel is completed, switches 78, 80 and 104 are placed in the "hoop" positions and the necessary number of coils are applied to the cylindrical sections.

While it is to be understood that the specific embodiments shown and described herein are illustrative, it is contemplated that various modifications may be made to the basic device such as the substitution of mechanical differentials in place of the electrical synchro-differentials or the use of various forms of function generators without departing from the spirit and scope of this invention.

What is claimed is:

1. Apparatus for controlling a dependently moving member in response to the position of an independently moving member including a synchro-transmitter connected to the independent member to produce output signals corresponding to the angular position of the independent member, signal responsive drive means adapted to position the dependent member with respect to the independent member in accordance with signals received at the input thereof, first servo means including a synchro-differential having a rotor shaft, a synchro-transformer connected to the output of the synchro-differential and having a rotor shaft, a motor connected to rotate the synchro-transformer rotor shaft in accordance with signals generated in the synchro-transformer, mechanical gearing connecting the synchro-transformer rotor shaft to the synchro-differential rotor shaft, such that rotation of the transformer shaft causes the output signal from the synchro-differential to differ in phase from the input signal thereto by an amount dependent on the ratio of the mechanical gearing, second servo means including a synchro-transformer having a rotor shaft, a motor connected to rotate the rotor shaft in accordance with signals generated in the synchro-transformer, means connecting the output of the synchro-transmitter to the input of the synchro-differential of the first servo means and the synchro-transformer of the second servo means, first signal generating means associated with the first servo means and adapted to produce signals in accordance with the angular posiiton of the rotor shaft of the synchro-transformer therein, second signal generating means associated with the second servo means and adapted to produce signals in accordance with the angular position of the rotor shaft of the synchro-transformer therein, and means to selectively connect the input of the signal responsive drive means to the output of either the first or second signal generating means.

2. Apparatus for controlling the cyclic movements of a dependently moving member in response to the angular position of an independently rotating member including a synchro-transmitter connected to the rotating member and adapted to produce three-phase signals corresponding to the angular position thereof, first servo means adapted to position the dependent member in a first direction with respect to the rotating member in response to signals transmitted thereto, second servo means adapted to position the dependent member in a second direction with respect to the rotating member in response to signals transmitted thereto, third servo means including a synchro-differential connected to the synchro-transmitter and having a rotor shaft, a synchro-transformer connected to the synchro-differential and having a rotor shaft, a motor connected to rotate the synchro-transformer rotor shaft in accordance with signals generated in the synchro-transformer, mechanical gearing connecting the synchro-transformer rotor shaft to the synchro differential rotor shaft whereby the input signal to the synchro-differential differs in phase from the output therefrom by an amount dependent on the ratio of the mechanical gearing, first and second signal generating means adapted to produce signals in accordance with the angular position of the transformer rotor shaft, and means to connect the first and second signal generating means to the first and second servo means respectively.

3. Apparatus for controlling the cyclic movement of a first member with respect to a rotatable second member wherein the number of cycles traveled by the first member is a function of the angular position of the second member, including a synchro-transmitter connected to the second member to produce signals representative of the angular position of the second member, a first servo means effective to position the first member with respect to the second member in accordance with signals applied thereto, second servo means including a first synchro-differential connected to the synchro-transmitter and having a rotor shaft, a second synchro-differential connected to the first synchro-differential and having a rotor shaft, a synchro-transformer connected to the second synchro-differential and having a rotor shaft, a motor connected to rotate the transformer rotor shaft in accordance with signals generated in the synchro-transformer, a first set of mechanical gearing connecting the transformer rotor shaft to the second differential rotor shaft and a second set of mechanical gearing connecting the second differential rotor shaft to the first differential rotor shaft, whereby the output of the second differential differs in phase from the input thereto by an amount determined by the ratio of the second set of gearing, and the output of the first differential differs in phase from the input thereto by an amount determined by the ratio of the first set of gearing, signal generating means connected to the rotor shaft of the synchro-transformer and effective to produce signals according to the angular position of the transformer rotor shaft and means to apply the signals from the signal generating means to the first servo means.

4. Apparatus for controlling the cyclic movement of a first member with respect to a rotatable second member wherein the number of cycles traveled by the first member is a function of the angular position of the second member, including a synchro-transmitter connected to the second member to produce signals representative of the angular position of the second member, a first servo means to position the first member with respect to the second member in accordance with signals applied thereto, second servo means including a first synchro-differential connected to the synchro-transmitter and having a rotor shaft, a second synchro-differential connected to the first synchro-differential and having a rotor shaft, a synchro-transformer connected to the second synchro-differential and having a rotor shaft, a motor connected to rotate the

transformer rotor shaft in accordance with signals generated in the synchro-transformer, a first set of mechanical gearing connecting the transformer rotor shaft to the second differential rotor shaft and a second set of mechanical gearing connecting the second differential rotor shaft to the first differential rotor shaft, whereby the output of the second differential differs in phase from the input thereto by an amount determined by the ratio of the second set of gearing and the output of the first differential differs in phase from the input thereto by an amount determined by the ratio of the first set of gearing, third servo means including a synchro-transformer connected to the synchro-transmitter and having a rotor shaft, a motor connected to rotate the rotor shaft in accordance with signals generated in the synchro-transformer, first signal generating means associated with the second servo means to produce signals in accordance with the angular position of the rotor shaft of the synchro-transformer therein, second signal generating means associated with the third servo means and effective to produce signals in accordance with the angular position of the rotor shaft of the synchro-transformer therein, and means to connect the input of the first servo means to either the first or second signal generating means.

5. Apparatus for controlling the cyclic movement of a first member with respect to a rotatable second member wherein the number of cycles traveled by the first member is a function of the angular position of the second member, including a synchro-transmitter connected to the second member to produce signals representative of the angular position of the second member, a first servo means to position the first member with respect to the second member in accordance with signals applied thereto, second servo means including a first synchro-differential connected to the synchro-transmitter and having a rotor shaft, a second synchro-differential connected to the first synchro-differential and having a rotor shaft, a synchro-transformer connected to the second synchro-differential and having a rotor shaft, a motor connected to rotate the transformer rotor shaft in accordance with signals generated in the synchro-transformer, a first set of mechanical gearing connecting the transformer rotor shaft to the second differential rotor shaft and a second set of mechanical gearing including means to vary the ratio of said gearing connecting the second differential rotor shaft to the first differential rotor shaft, whereby the output of the second differential differs in phase from the input thereto by an amount determined by the ratio of the second set of gearing and the output of the first differential differs in phase from the input thereto by an amount determined by the ratio of the first set of gearing, signal generating means connected to the rotor shaft of the synchro-transformer to produce signals according to the angular position of the transformer rotor shaft, and means to apply the signals from the signal generating means to the first servo means.

6. Apparatus for controlling the cyclic movement of a first member with respect to a rotatable second member wherein the number of cycles traveled by the first member is a function of the angular position of the second member, including a synchro-transmitter connected to the second member to produce signals representative of the angular position of the second member, a first servo means to position the first member with respect to the second member in accordance with signals applied thereto, second servo means including a first synchro-differential connected to the synchro-transmitter and having a rotor shaft, a second synchro-differential connected to the first synchro-differential and having a rotor shaft, a synchro-transformer connected to the second synchro-differential and having a rotor shaft, a motor connected to rotate the transformer rotor shaft in accordance with signals generated in the synchro-transformer, a first set of mechanical gearing connecting the transformer rotor shaft to the second differential rotor shaft and a second set of mechanical gearing including means to vary the ratio of said gearing connecting the second differential rotor shaft to the first differential rotor shaft, whereby the output of the second differential differs in phase from the input thereto by an amount determined by the ratio of the second set of gearing and the output of the first differential differs in phase from the input thereto by an amount determined by the ratio of the first set of gearing, first signal generating means connected to the rotor shaft of the synchro-transformer to produce signals according to the angular position of the transformer rotor shaft, third servo means including a synchro-transformer connected to the synchro-transmitter, the synchro-transformer having a rotor shaft, a motor connected to rotate the rotor shaft in accordance with signals generated in the synchro-transformer, second signal generating means having an input shaft connected through a variable gear box to the rotor shaft of the synchro-transformer in the third servo means and effective to produce signals in accordance with the angular position of said input shaft, and means to connect the first servo means to either the first or second signal generating means whereby two different functions of cyclic movement of the first member with respect to the second member are afforded.

7. Apparatus as defined in claim 4 wherin the second servo means includes a third synchro-differential serially connected between the second synchro-differential and the synchro-transformer, said third synchro-differential having a rotor shaft, and means connected to rotate the rotor shaft such that the output from the third synchro-differential differs in phase from the input thereto by an amount determined by the angular position of the rotor shaft.

8. Apparatus as defined in claim 4 wherein means are connected to the rotor shafts of the first and second synchro-differentials and to the rotor shafts of the synchro-transformers in the second and third servo means, to indicate the number of revolutions through which each shaft has rotated.

9. Apparatus for controlling a dependently moving member in response to the position of an independently moving member including a synchro-transmitter connected to the independently moving member and adapted to produce three-phase signals which are representative of the angular position of the independent member, signal responsive means to position the dependent member with respect to the independent member, a synchro-differential having its rotor windings connected to the synchro-transmitter, a synchro-transformer having its stator windings connected to the stator windings of the synchro-differential, a motor having its rotor connected by a shaft to the rotor of the synchro-transformer, said motor being electrically connected to the synchro-transformer such that the voltages induced in the rotor windings of the synchro-transformer actuate the motor to rotate the shaft whereby the axis of the synchro-transformer rotor is kept in alignment with the stator field of the synchro-transformer, a pinion mounted on the rotor shaft of the synchro-transformer, a gear mounted on a shaft connected to the rotor of the synchro-differential, the gear being positioned to engage the pinion whereby the rotor of the synchro-differential is rotated with a speed related to the speed of the synchro-transformer rotor shaft by the gear-to-pinion ratio, this rotation causing the output of the synchro-differential to differ in phase from the input of the synchro-differential by an amount dependent on the gear-to-pinion ratio, second signal generating means comprising a plurality of taps, each tap being held at a particular D.C. potential, a wiper adapted to be rotated by a shaft such that the wiper successively contacts the taps, the wiper having an output terminal, the voltage appearing at said output terminal varying according to the angular position of the wiper, the wiper of the second signal generating means being connected to the rotor shaft of the synchro-transformer whereby the wiper is rotated in accordance with the signals appearing at the output of the

synchro-differential, the output terminal of the wiper being connected to the signal responsive means.

10. Apparatus for controlling the cyclic movements of a dependently moving member in response to the angular position of an independently rotatable member including a synchro-transmitter connected to the rotating member and effective to produce three-phase signals corresponding to the angular position of the rotating member, first servo means to position the dependent member in a first direction with respect to the rotating member in response to signals transmitted thereto, second servo means to position the dependent member in a second direction with respect to the rotating member in response to signals transmitted thereto, third servo means including a synchro-differential having its rotor windings connected to the signal generating means and having a rotor shaft, a synchro-transformer having its stator windings connected to the stator windings of the synchro-differential, a motor having its rotor connected by a shaft to the rotor of the synchro-transformer, the motor being electrically connected to the synchro-transformer such that the voltages induced in the rotor windings of the synchro-transformer actuate the motor to rotate the shaft whereby the axis of the transformer rotor is kept in alignment with the stator field of the synchro-transformer, the rotor shaft of the transformer being connected to the rotor shaft of the synchro-differential by mechanical gearing, such that the output of the synchro-differential differs in phase from the input thereto by an amount dependent on the ratio of the gearing, first and second signal generating means associated with the transformer rotor shaft, each means including a plurality of taps, each tap being held at a particular D.C. potential, a wiper associated with each signal generating means adapted to be rotated by the transformer rotor shaft such that the wiper successively contacts the taps, an output terminal on each wiper, the voltage appearing at the output terminal varying according to the angular position of the transformer rotor shaft, and means to connect the output terminal of respective wipers to the first and second servo means.

11. Apparatus for controlling the cyclic movement of a first member with respect to a rotatable second member wherein the number of cycles traveled by the first member is a function of the angular position of the second member, including a synchro-transmitter connected to the rotatable second member and effective to produce three-phase signals in its stator windings which correspond in phase to the angular position of the second member, a first servo means connected to the first member to position the first member with respect to the second member in accordance with signals applied thereto, second servo means including a first synchro-differential having a rotor shaft and having its rotor windings connected through a switch to the stator windings of the synchro-transmitter, a second synchro-differential having a rotor shaft and having its rotor windings connected to the stator windings of the first synchro-differential, a synchro-transformer having a rotor shaft and having its stator windings connected to the stator windings of the second synchro-differential, a motor having its rotor connected by a shaft to the rotor of the synchro-transformer, said motor being electrically connected to the synchro-transformer such that the voltages induced in the rotor windings of the synchro-transformer actuate the motor to rotate the shaft whereby the axis of the synchro-transformer rotor is kept in alignment with the stator field, a first set of mechanical gearing connecting the synchro-transformer rotor shaft to the rotor shaft of the second synchro-differential and a second set of mechanical gearing including means to vary the ratio of said second gearing connecting the rotor shaft of the second synchro-differential to the rotor shaft of the first synchro-differential, whereby the output of the second differential differs in phase from the input thereto by an amount determined by the ratio of the second set of gearing and the output of the first differential differs in phase from the input thereto by an amount determined by the ratio of the first set of gearing, first signal generating means associated with the rotor shaft of the synchro-transformer including a plurality of taps, each tap being held at a particular D.C. potential, a wiper which is rotated by the transformer rotor shaft such that the wiper successively contacts the taps, an output terminal on the wiper, the voltage appearing at the output terminal varying according to the angular position of the transformer rotor shaft, third servo means including a synchro-transformer having its stator windings connected through a switch to the stator windings of the synchro-transmitter, a motor having its rotor connected by a shaft to the rotor of the synchro-transformer, said motor being electrically connected to the synchro-transformer such that the voltage induced in the transformer rotor windings actuate the motor to rotate the shaft whereby the axis of the transformer rotor is kept in alignment with the transformer stator field, second signal generating means including a potentiometer having a wiper connected to a shaft and rotatable therewith, said wiper having an output terminal, adjustable rotor gearing connecting the transformer rotor shaft to the potentiometer shaft whereby the voltage appearing at the wiper output terminal varies according to the angular position of the potentiometer shaft, and means to connect the first servo means to the output terminals of either the first or second signal generating means whereby two different functions of cyclic movement of the first member with respect to the second member are afforded.

12. Apparatus as defined in claim 11 wherein means are connected to the output shafts of the first and second synchro-differentials and to the output shafts of the synchro-tranformers in the second and third servo means, to indicate the number of revolutions through which each shaft has rotated.

13. Apparatus for distributing a filament about a rotatable form in a predetermined pattern comprising transmitter means connected to the rotatable form for generating output signals corresponding to the angular position thereof, filament feeding means movable along the rotatable form, signal responsive means for positioning the feeding means with respect to the rotatable form, servo means including first and second synchro-differentials each having an input, output and rotor shaft, the input of the first synchro-differential being connected to receive the output signals from the transmitter means, the input of the second synchro-differential being connected to the output of the first synchro-differential, the first and second synchro-differentials being responsive to the angular displacements of the rotor shafts thereof to modify the output signals, drive means having an input connected to receive the modified output of the second synchro-differential and having an output shaft, the drive means being responsive to the modified output to rotate the output shaft in correspondence therewith, mechanical gearing connecting the output shaft of the drive means to the rotor shaft of the second synchro-differential whereby the output signals of the transmitter means are modified by an amount dependent upon the ratio of the gearing, signal generating means for producing signals in accordance with the angular position of the output shaft, the signal generating means being operatively connected to the signal responsive means, and variable ratio gear means connected between the rotor shafts of the first and second synchro-differentials to introduce a lead rate into the movement of the feeding means.

References Cited in the file of this patent

UNITED STATES PATENTS

2,411,744	Moyer	Nov. 26, 1946
2,582,221	Belsey et al.	Jan. 15, 1952
2,664,530	Young	Dec. 29, 1953