H. G. S. KIDDER.

FRAMING TOOL.

APPLICATION FILED JAN. 6, 1917.

1,237,790. Patented Aug. 21, 1917.

Fig. 1.

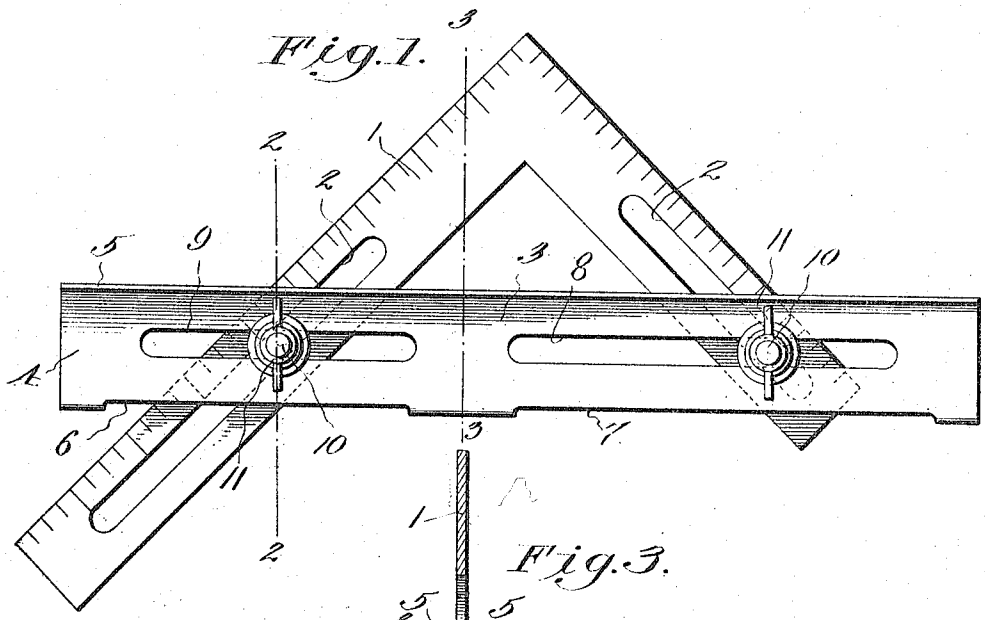

Fig. 3.

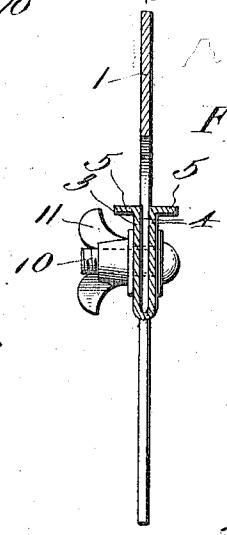

Fig. 2.

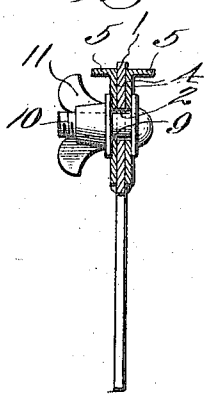

Fig. 4.

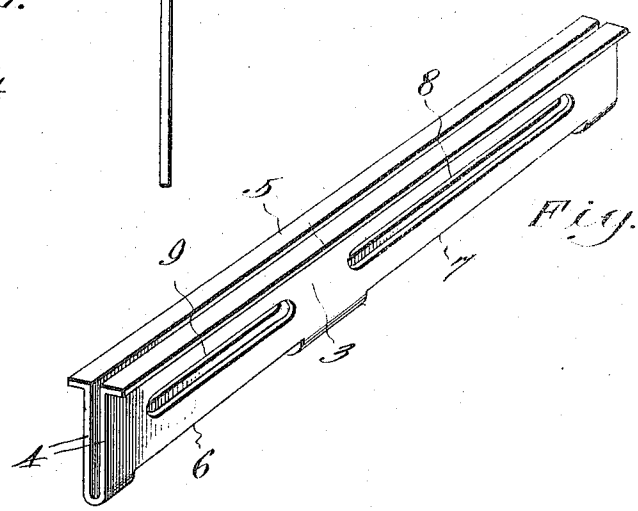

WITNESSES

M. Map. Duvall.

INVENTOR

H. G. S. Kidder,

BY Victor J. Evans

ATTORNEY

UNITED STATES PATENT OFFICE.

HORATIO G. S. KIDDER, OF CREWE, VIRGINIA.

FRAMING-TOOL.

1,237,790. Specification of Letters Patent. Patented Aug. 21, 1917.

Application filed January 6, 1917. Serial No. 141,035.

To all whom it may concern:

Be it known that I, HORATIO G. S. KIDDER, a citizen of the United States, residing at Crewe, in the county of Nottoway and State of Virginia, have invented new and useful Improvements in Framing-Tools, of which the following is a specification.

The present invention relates to improvements in the construction of framing squares for joiners, carpenters, stair builders and the like, and the object of the invention is to produce a simple, cheap and thoroughly efficient tool, whereby the angle of cuts for the different rafters of a building or the vertical and horizontal lines for the step and riser upon a carriage or string board may be easily and quickly obtained.

With the above and other objects in view the improvement resides in the construction, combination and arrangement of parts set forth in the following specification and falling within the scope of the appended claims.

In the drawing:

Figure 1 is a side elevation of the improved framing tool,

Fig. 2 is a sectional view approximately on the line 2—2 of Fig. 1,

Fig. 3 is a sectional view approximately on the line 3—3 of Fig. 2, and

Fig. 4 is a perspective view of the stock or straight edge.

In carrying out my invention I employ an ordinary carpenter's try-square 1 provided with the usual graduations and I centrally provide each of the blades of the said square with elongated openings 2—2.

The numeral 3 designates the straight edge or stock of the improvement, the same being preferably constructed of a sheet of metal which is bent upon itself to provide parallel sides 4—4, the edges of the said sides being bent to provide outturned right angular ledges 5—5. The blades of the square are adapted to be received between the spaced sides 4 of the straight edge 3 and to pass through openings 6 and 7 respectively upon the inner edge or more strictly speaking the connecting member 4′ for the sides 4—4. The opening 6 through which the longer blade of the square 1 passes is of a materially less length than that of the opening 7 through which the shorter blade of the said square is passed, and the sides 4 of the straight edge are provided with spaced registering parallel slots or openings 8 and 9 respectively, the opening 9 being disposed parallel to the opening 6 and being of a length approximately equaling the length of the said opening 6, while the opening 9 is disposed adjacent to the slot or opening 8 and is of a length approximately equaling the length of the said slot or opening 7. The openings 8 and 9 terminate approximately in a line with the inner terminals of the openings 6 and 7, and passing through the said openings 8 and 9 and through the slots in the blades of the square are binding elements in the nature of bolts 10 and wing nuts 11 therefor. The opening 2 in the longer blade of the try-square is of a greater length than that of the opening 2 in the shorter blade of the said square, and by reference to Fig. 1 of the drawing it will be seen that the shorter blade passes through the portion of the stock provided with the elongated openings 7 and 8, while the longer blade passes through the opening 6 in the stock so that the elongated opening 2 in the longer blade of the square is arranged to intersect with the shorter openings 9 in the stock, and likewise the opening 2 in the shorter blade of the square is arranged to intersect with the elongated openings 8 in the stock, and whereby a nice adjustment may be obtained between the square and stock.

The straight edge is adapted to have its side arranged against the side of the lumber to be scribed, while one of the ledges contacts with the edge of the said piece of lumber. The square either before or after the straight edge has been thus arranged, has its legs adjusted so that the desired angle of cut may be properly determined, and the operation of the device will, it is thought, be perfectly apparent to those skilled in the art to which such invention appertains without further detailed description.

Having thus described the invention, what I claim is:

1. The combination with a try-square having its blades provided each with an elongated slot, of a straight edge constructed from a single strip of material bent to provide parallel sides having their edges provided with outwardly extending ledges which are arranged at a right angle to the respective sides upon which they are formed, the connecting portion for the parallel sides being slotted for the passage of the blades of the square, and the sides of the straight edge having longitudinal slots disposed opposite the referred to slots in the connecting mem-

ber for the side, and binding elements passing through the slots in the sides of the straight edge and the slots in the blades of the try-square, as and for the purpose set forth.

2. The combination with a graduated try-square having its longer blade provided with a longitudinal slot and a shorter blade also provided with a longitudinal slot which is of a less length than the slot of the longer blade, of a straight edge for the square constructed from a single blank of flat material bent upon itself to provide parallel sides, the edges of the sides being outturned to provide ledges which are disposed at a right angle with respect to the sides, the connecting member for the sides having two spaced openings of different lengths, the side members having longitudinal slots disposed opposite the referred to openings and of a length corresponding approximately with the length of the said openings, the blades of the square adapted to be arranged between the sides and passed through the openings in the connecting members, whereby the shorter blade is disposed to be received in the longer opening and adjacent the longer slots in the sides and the longer blade disposed to be received in the shorter opening and adjacent the shorter slots in the sides, and binding elements passing through the openings in the blades of the square and through the slots in the sides of the straight edge, whereby to adjustably secure the straight edge upon the try-square.

In testimony whereof I affix my signature.

HORATIO G. S. KIDDER.

Copies of this patent may be obtained for five cents each, by addressing the "Commissioner of Patents, Washington, D. C."