June 16, 1959 K. BENKO 2,890,537

EARTH CIRCLING SATELLITE TOY

Filed Sept. 8, 1958 2 Sheets-Sheet 1

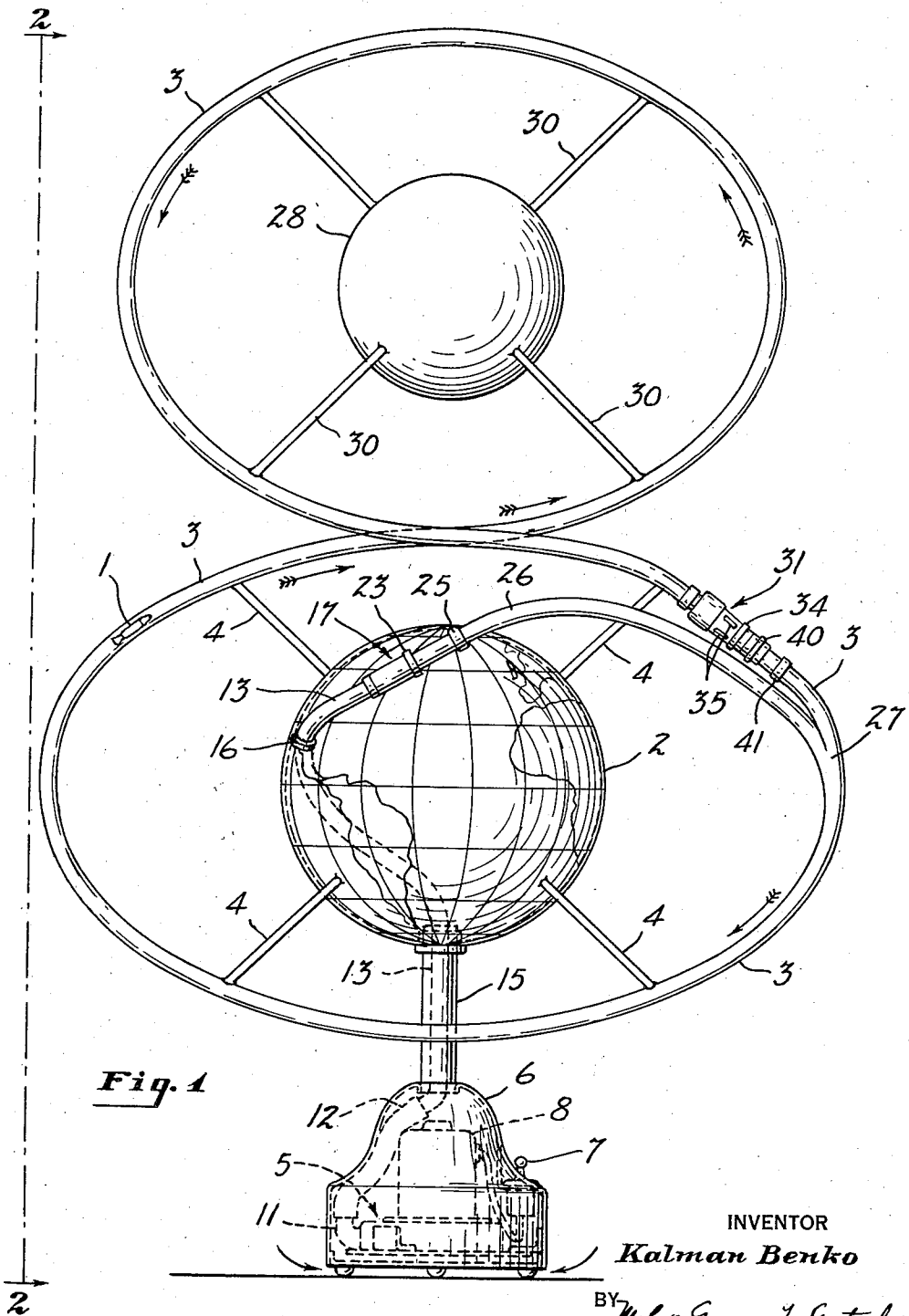

Fig. 1

INVENTOR
Kalman Benko

BY Meloy, Greene & Le Grotenhuis
ATTORNEYS

June 16, 1959 K. BENKO 2,890,537

EARTH CIRCLING SATELLITE TOY

Filed Sept. 8, 1958

2 Sheets-Sheet 2

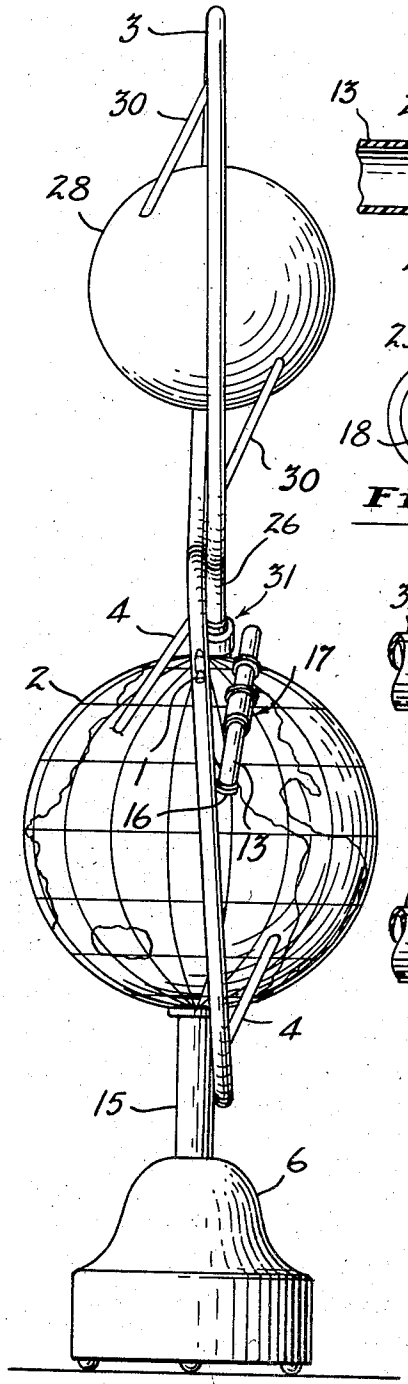

Fig. 2

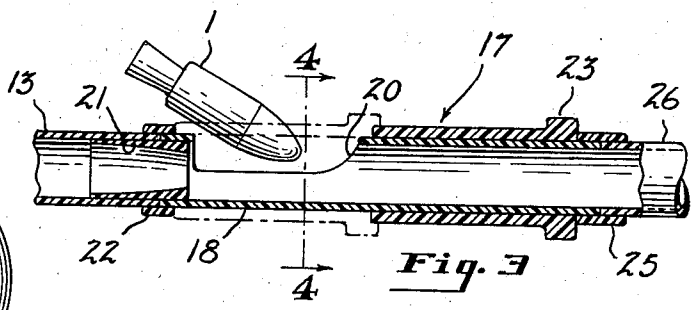

Fig. 3

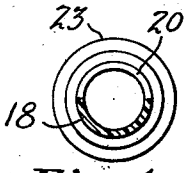

Fig. 4

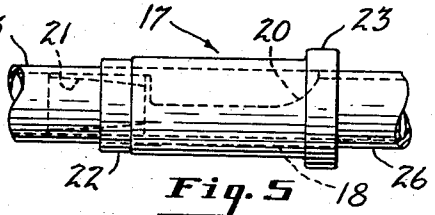

Fig. 5

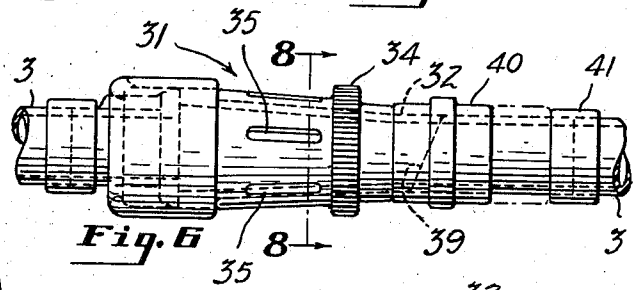

Fig. 6

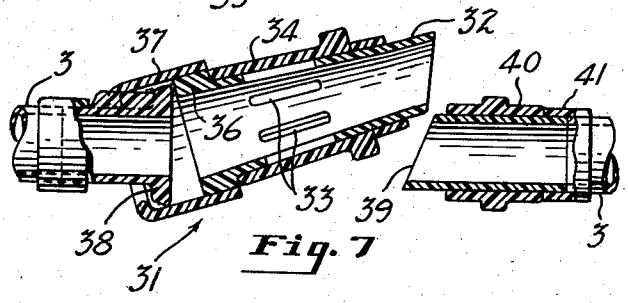

Fig. 7

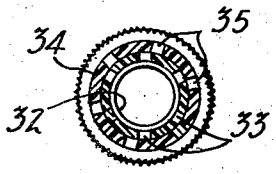

Fig. 8

INVENTOR

Kalman Benko

BY McCoy, Greene & Le Grotenbuis

ATTORNEYS

United States Patent Office 2,890,537 Patented June 16, 1959

2,890,537

EARTH CIRCLING SATELLITE TOY

Kalman Benko, Cleveland, Ohio

Application September 8, 1958, Serial No. 759,507

5 Claims. (Cl. 40—37)

The present invention relates to a toy in which a satellite is made to circle a miniature earth in a closed orbit in a continuous and controlled manner.

The object of the invention is to provide a new and useful toy which embodies and reflects the current interest in space.

Referring to the drawings in which like numerals refer to like parts,

Fig. 1 is a front elevation of a toy of the present invention;

Fig. 2 is a side elevation of the toy of Fig. 1 taken along line 2—2;

Fig. 3 is an enlarged cross-sectional view of the satellite loading station showing the loading step;

Fig. 4 is a cross-sectional view taken along line 4—4 of Fig. 3 further showing the loading station;

Fig. 5 is an enlarged side view of the satellite loading station similar to Fig. 3 but after completion of loading;

Fig. 6 is an enlarged side view of the satellite control and retrieving station;

Fig. 7 is a cross-sectional view of the satellite control and retrieving station in the open position; and

Fig. 8 is a cross-sectional view of the satellite control and retrieving station taken along line 8—8 of Fig. 6.

In accordance with the present invention, a satellite 1 is caused to orbit in a closed path about a miniature earth 2, in a path or orbit which is defined by a hollow tube 3. The tube 3 is attached to the earth by struts or attaching means 4 and is preferably made of glass or clear plastic so that the orbiting satellite is readily seen. The earth is mounted on a stand comprising a base portion 6 and shaft 15.

The satellite is driven and propelled about its orbit in tube 3 by air pressure which is provided by a blower unit 5 in the base 6 of the stand. The blower is electrically operated and is activated by switch 7 which controls the wire electrical power source leading into the blower motor 8. Air enters at the bottom of the base 6 as indicated by the arrows and is forced by the blower into the air supply line.

The air supply line or conduit comprises an elbow 11 at the blower outlet connected to a removable flexible length of hose or tubing 12 in the base of the stand which in turn connects to a length of plastic tubing 13. The tubing length 13 leads up the inside of the earth supporting shaft 15 inside the earth, and out through a grommet 16 in the earth surface. It terminates at the bottom of the end of the satellite loading or launching station 17.

The satellite loading station 17 comprises a short length of tubing 18 having a satellite receiving opening 20 defined therein. The opening is adapted to permit easy insertion of the satellite into the tubing 18 as shown. Immediately preceding the opening 20 and positioned inside the lengths of tubing 13 and 18 at the joint thereof is a semi-Venturi reducing fitting or plug 21. This plug 21 prevents the satellite from falling back into the air supply line, reinforces the joint between the tubing lengths 13 and 18, and increases the air speed flow at the

receiving station so as to facilitate launching of the satellite. A collar 22 is cemented to the outside of the joint between the tubing lengths 13 and 18 and acts as a stop for the sliding closure 23.

Closure 23 is in the open position in Fig. 3 and in the closed position in Fig. 4. It is merely a length of tubing having an inside diameter slightly larger than the outside diameter of the tubing length 18. It is kept in the closed position during operation of the unit and is opened only for the purpose of launching the satellite. Collar 25 acts as a stop at the other end of closure 23. Connected to the other end of tubing length 18 by collar 25 is a length of tubing 26 leading into the tubing which defines the orbit of the satellite.

The tubing 26 leads out from the earth and meets the orbit tubing 3 at a relatively acute angle at juncture 27. The acute angle at the juncture is preferably less than 45° and must be small enough to allow the satellite to enter the orbital tubing 3 without difficulties.

Once in orbit, the satellite follows the path defined by the orbital tubing 3 until the blower is turned off. The path defined by the orbital tubing can be any closed path and can be varied as desired. In Figs. 1 and 2, it follows a figure eight path and circles a moon 28 which is positioned by struts 29 as shown. This refinement may be omitted if desired and others substituted.

The satellite control and retrieving station 31 is shown in detail in Figs. 6–8. It features an adjustable air valve control means comprising an inner tubular fitting 32 having longitudinal slots 33 spaced about the circumference of the tubing and an outer fitting 34 having similar longitudinal slots 35. Rotation of the outer fitting over the inner fitting opens and closes the inner fitting slots 33 and controls the amount of air exhausted therefrom. The amount of air exhausted from the air valve control means, in turn governs the speed of the satellite. When a large volume of air is exhausted, the satellite orbits rapidly and when a small volume of air is exhausted, it orbits slowly.

As can be seen in Figs. 6 and 7, the inner valve fitting 32 is provided with a flange 36 which is cemented to a coupling 37. Fitting 32 is interposed between collar 38 and an inclined joint 39 in the tubing 3 and in the closed position provides a continuous path and substantially airtight seal. Sliding collar 40 holds it in closed position as shown in Fig. 6. Stop 41 limits the movement of collar 40.

The air control valve should be located in the orbit immediately in front of the juncture between the orbit tube 3 and length of tubing 26 leading in from the loading or launching station 17. This provides the longest path to be followed by the air furnished by the blower prior to exhaustion to the atmosphere and eliminates dead spots in which the satellite might have no motivation or stall.

When it is desired to remove the satellite from the closed path, the sliding collar 40 is moved back against stop 41 and fitting 32 is swung outwardly with the center of collar 38 at substantially the center of rotation, thus opening the path at joint 39 and permitting the satellite to be ejected as indicated in Fig. 7.

Needless to say, other air control valves and satellite retrieving means may be devised within the scope of the present invention.

When the satellite orbit is in a vertical or substantially vertical position, the air control valve should be located adjacent the horizontal centerline of the orbit on the down side thereof. A certain momentum is required to drive the satellite past the air control and exhaust unit and the satellite should be falling by natural gravitational forces. This rule does not apply when the satellite orbit is horizontal and applies with diminishing effect as the

orbit approaches the horizontal from the vertical position.

The satellite shape and weight may be varied as desired provided it is adapted to move freely inside the tubing when motivated by air pressure. Round balls may be used instead of a satellite and more than one object may be placed in orbit. In this respect, it will be found that when two light balls are placed in orbit, they will alternately replace themselves at the control station 31, one ball being positioned below and adjacent the air exhaust by back pressure. The other orbiting ball can be made to hit it and knocks it out of position and then remain at the same spot until it in turn is displaced. The satellite or other orbited objects should be relatively light in weight and proportioned so as to fill up the orbital tube area but still move freely therein. As used herein, the term "satellite" includes simulated rockets, balls, and other objects adapted to orbit inside the tubing.

Lifewise, the object about which the satellite orbits may be a simulated earth or moon or other suitable object.

The toy of this invention can be made of a variety of materials and in various ways as is apparent to those skilled in the art.

Having thus described my invention, what I claim is:

1. A toy comprising tubing mounted to define an orbit in a closed path about an object, means providing a continuous supply of air to said tubing, air exhaust means in said tubing, and a satellite adapted to orbit inside said tubing.

2. A toy comprising tubing mounted to define an orbit about an object, a satellite in said tubing and adapted to move freely therein when motivated by air pressure, a blower unit supplying air to said tubing to motivate said satillite, an air exhaust and control valve, means to launch said satellite in orbit in said tubing, and means to retrieve said satellite from said tubing.

3. The toy of claim 2 in which the air exhaust and control valve is located on the down side of the orbit immediately before the tubing connection from the means to launch said satellite in orbit in said tubing.

4. The toy of claim 2 in which the air exhaust and control valve is adjustable.

5. A toy comprising a simulated earth mounted on a stand provided with a base, a blower unit in the base of the stand, transparent tubing mounted on struts disposed about the earth to define a closed path about the earth, a satellite adapted to orbit in said tubing when powered by air pressure from said blower, a launching station adapted to receive the satellite adjacent the earth's surface, an air supply conduit running from the blower unit outlet, up the stand, inside the earth and then outside the earth to said launching station, a tubing connection from said launching station to said transparent tubing defining a closed path about the earth, said tubing connection joining said transparent tubing at an acute angle on the down side thereof, an air exhaust and control valve in said transparent tubing immediately in front of the junction with said tubing connection and means to retrieve said satellite from said transparent tubing.

No references cited.