US00RE48433E

(19) **United States**

(12) **Reissued Patent**

Fitzgibbon et al.

(10) **Patent Number: US RE48,433 E**

(45) **Date of Reissued Patent: Feb. 9, 2021**

(54) **METHOD AND APPARATUS TO FACILITATE TRANSMISSION OF AN ENCRYPTED ROLLING CODE**

(71) Applicant: **The Chamberlain Group, Inc.**, Oak Brook, IL (US)

(72) Inventors: **James J. Fitzgibbon**, Batavia, IL (US); **Eric M. Gregori**, Lindenhurst, IL (US); **Edward T. Laird**, Lombard, IL (US)

(73) Assignee: **The Chamberlain Group, Inc.**, Oak Brook, IL (US)

(21) Appl. No.: **15/674,069**

(22) Filed: **Aug. 10, 2017**

Related U.S. Patent Documents

Reissue of:

(64) Patent No.: **8,422,667**
Issued: **Apr. 16, 2013**
Appl. No.: **11/501,455**
Filed: **Aug. 9, 2006**

U.S. Applications:

(63) Continuation-in-part of application No. 11/480,288, filed on Jun. 30, 2006, now Pat. No. 7,561,075, which (Continued)

(51) **Int. Cl.**
H04L 9/12 (2006.01)
H04L 9/00 (2006.01)
(Continued)

(52) **U.S. Cl.**
CPC ***H04L 9/12*** (2013.01); ***H04L 9/00*** (2013.01); ***H04L 9/0891*** (2013.01);
(Continued)

(58) **Field of Classification Search**
CPC C12N 9/1247; C12N 15/115; C12N 2330/30; C12N 2310/321; H04L 9/0891;
(Continued)

(56) **References Cited**

U.S. PATENT DOCUMENTS

3,906,348 A 9/1975 Willmott
4,097,859 A 6/1978 Looschen
(Continued)

FOREIGN PATENT DOCUMENTS

AU 645228 1/1994
AU 710682 9/1999
(Continued)

OTHER PUBLICATIONS

MM57HS01 HiSeC.TM. Fixed and Rolling Code Decoder, National Semiconductor, Nov. 11, 1994, 1-8.
(Continued)

Primary Examiner — Eric B. Kiss
(74) *Attorney, Agent, or Firm* — Fitch, Even, Tabin & Flannery LLP

(57) **ABSTRACT**

An encrypted rolling code (**11**), a plurality of differing data bit order patterns (**13**), and a plurality of differing data inversion patterns **14**) are provided. One then selects (**15**) a particular one of each of these patterns and uses those selected patterns as transmission characteristics when transmitting (**16**) at least part of the encrypted rolling code.

34 Claims, 9 Drawing Sheets

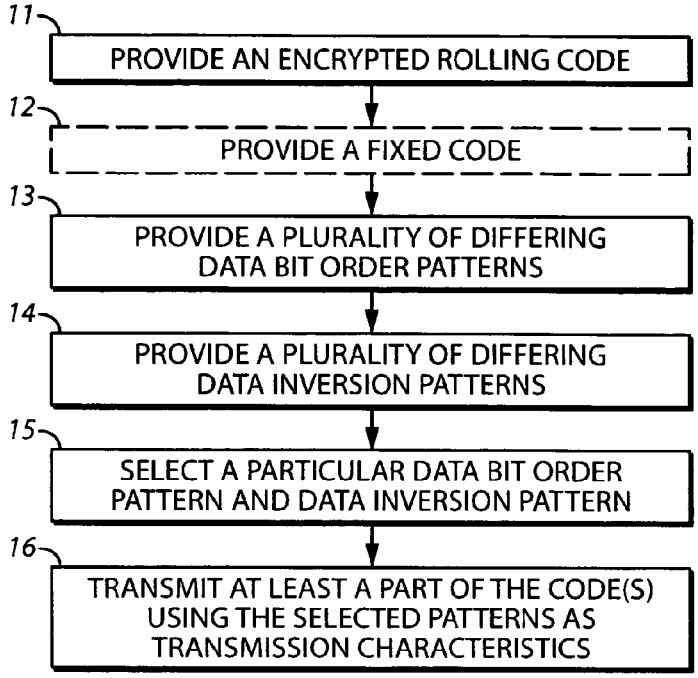

Related U.S. Application Data

is a continuation of application No. 11/044,411, filed on Jan. 27, 2005, now Pat. No. 7,071,850, and a continuation-in-part of application No. 11/172,525, filed on Jun. 30, 2005, now Pat. No. 9,148,409.

(51) **Int. Cl.**

H04L 9/32	(2006.01)
H04L 9/08	(2006.01)
G07C 9/00	(2020.01)

(52) **U.S. Cl.**

CPC .. ***H04L 9/3226*** (2013.01); *G07C 2009/00253* (2013.01); *H04L 2209/80* (2013.01)

(58) **Field of Classification Search**

CPC . H04L 2209/80; C12Q 1/6865; C12Q 1/6846; C12Q 2521/119

See application file for complete search history.

(56) **References Cited**

U.S. PATENT DOCUMENTS

4,178,549	A		12/1979	Ledenbach et al.
4,243,976	A		1/1981	Warner et al.
4,255,742	A		3/1981	Gable et al.
4,387,455	A		6/1983	Schwartz
4,387,460	A		6/1983	Boutmy et al.
4,468,787	A		8/1984	Keiper, Jr.
4,566,044	A		1/1986	Langdon, Jr. et al.
4,677,284	A		6/1987	Genest
4,720,860	A		1/1988	Weiss
4,750,118	A		6/1988	Heitschel et al.
4,808,995	A		2/1989	Clark et al.
4,829,296	A		5/1989	Clark et al.
4,850,046	A		7/1989	Philippe
4,856,062	A		8/1989	Weiss
4,885,778	A		12/1989	Weiss
4,893,338	A		1/1990	Pastor
4,910,750	A		3/1990	Fisher
4,988,990	A		1/1991	Warrior
4,988,992	A		1/1991	Heitschel et al.
5,021,776	A		6/1991	Anderson et al.
5,091,942	A		2/1992	Dent
5,136,548	A		8/1992	Claar et al.
5,150,464	A		9/1992	Sidhu et al.
5,197,061	A		3/1993	Halbert-Lassalle et al.
5,252,960	A		10/1993	Duhame
5,420,925	A		5/1995	Michaels
5,442,340	A		8/1995	Dykema
5,517,187	A		5/1996	Bruwer et al.
5,563,600	A	*	10/1996	Miyake G07C 9/00182 340/5.24
5,565,812	A	*	10/1996	Soenen 327/558
5,566,359	A		10/1996	Corrigan
5,576,701	A		11/1996	Heitschel et al.
5,578,999	A		11/1996	Matsuzawa et al.
5,594,429	A		1/1997	Nakahara
5,600,653	A		2/1997	Chitre et al.
5,635,913	A		6/1997	Willmott et al.
5,673,017	A		9/1997	Dery et al.
5,686,904	A		11/1997	Bruwer
5,699,065	A		12/1997	Murray
5,719,619	A		2/1998	Hattori et al.
5,774,065	A	*	6/1998	Mabuchi et al. 340/825.72
5,838,747	A		11/1998	Matsumoto
5,942,985	A		8/1999	Chin
5,949,349	A		9/1999	Farris et al.
6,012,144	A		1/2000	Pickett
6,049,289	A		4/2000	Waggamon et al.
6,052,408	A		4/2000	Trompower et al.
6,070,154	A		5/2000	Tavor et al.
6,094,575	A		7/2000	Anderson et al.
6,154,544	A	*	11/2000	Farris et al. 380/262
6,157,719	A		12/2000	Wasilewski et al.
6,175,312	B1		1/2001	Bruwer et al.
6,181,255	B1		1/2001	Crimmins et al.
6,243,000	B1		6/2001	Tsui
6,414,587	B1		7/2002	Fitzgibbon
6,414,986	B1		7/2002	Usui
6,456,726	B1		9/2002	Yu et al.
6,496,477	B1		12/2002	Perkins et al.
6,535,544	B1		3/2003	Partyka
6,549,949	B1		4/2003	Bowman-Amuah
6,640,244	B1		10/2003	Bowman-Amuah
6,688,518	B1		2/2004	Valencia et al.
6,690,796	B1		2/2004	Farris et al.
6,697,379	B1		2/2004	Jacquet et al.
6,754,266	B2		6/2004	Bahl et al.
6,810,123	B2		10/2004	Farris et al.
6,829,357	B1		12/2004	Alrabady et al.
6,850,910	B1		2/2005	Yu et al.
6,930,983	B2		8/2005	Perkins et al.
6,956,460	B2		10/2005	Tsui
6,963,561	B1		11/2005	Lahat
6,980,518	B1		12/2005	Sun et al.
6,980,655	B2		12/2005	Farris et al.
6,998,977	B2		2/2006	Gregori et al.
7,002,490	B2		2/2006	Lablans
7,039,397	B2		5/2006	Chuey
7,039,809	B1		5/2006	Wankmueller
7,042,363	B2		5/2006	Katrak et al.
7,050,479	B1		5/2006	Kim
7,050,794	B2		5/2006	Chuey et al.
7,057,494	B2		6/2006	Fitzgibbon
7,057,547	B2		6/2006	Olmsted
7,068,181	B2		6/2006	Chuey
7,071,850	B1		7/2006	Fitzgibbon et al.
7,088,218	B2		8/2006	Chuey
7,088,706	B2		8/2006	Zhang et al.
7,139,398	B2		11/2006	Candelore et al.
7,161,466	B2		1/2007	Chuey
7,298,721	B2		11/2007	Atarashi et al.
7,301,900	B1		11/2007	Laksono
7,333,615	B1		2/2008	Jarboe et al.
7,336,787	B2		2/2008	Unger et al.
7,346,163	B2		3/2008	Pedlow et al.
7,353,499	B2		4/2008	de Jong
7,406,553	B2		7/2008	Edirisooriya et al.
7,412,056	B2		8/2008	Farris et al.
7,415,618	B2		8/2008	de Jong
7,429,898	B2		9/2008	Akiyama et al.
7,447,498	B2		11/2008	Chuey et al.
7,489,922	B2		2/2009	Chuey
7,492,898	B2		2/2009	Farris et al.
7,492,905	B2		2/2009	Fitzgibbon
7,516,325	B2		4/2009	Willey
7,535,926	B1		5/2009	Deshpande et al.
7,545,942	B2		6/2009	Cohen et al.
7,548,153	B2		6/2009	Gravelle et al.
7,561,075	B2		7/2009	Fitzgibbon et al.
7,564,827	B2		7/2009	Das et al.
7,598,855	B2		10/2009	Scalisi et al.
7,623,663	B2		11/2009	Farris et al.
7,668,125	B2		2/2010	Kadous
7,741,951	B2		6/2010	Fitzgibbon
7,742,501	B2		6/2010	Williams
7,757,021	B2		7/2010	Wenzel
7,764,613	B2		7/2010	Miyake et al.
7,786,843	B2		8/2010	Witkowski
7,812,739	B2		10/2010	Chuey
7,839,851	B2		11/2010	Kozat
7,855,633	B2		12/2010	Chuey
7,999,656	B2		8/2011	Fisher
8,014,377	B2		9/2011	Zhang et al.
8,130,079	B2		3/2012	McQuaide, Jr. et al.
8,194,856	B2		6/2012	Farris et al.
8,207,818	B2		6/2012	Keller, Jr.
8,209,550	B2		6/2012	Gehrmann
8,225,094	B2		7/2012	Willey
8,233,625	B2		7/2012	Farris et al.
8,266,442	B2		9/2012	Burke
8,276,185	B2		9/2012	Messina et al.
8,284,021	B2		10/2012	Farris et al.

(56) **References Cited**

U.S. PATENT DOCUMENTS

8,290,465	B2	10/2012	Ryu et al.
8,416,054	B2	4/2013	Fitzgibbon
8,422,667	B2	4/2013	Fitzgibbon
8,452,267	B2	5/2013	Friman
8,463,540	B2	6/2013	Hannah et al.
8,536,977	B2	9/2013	Fitzgibbon
8,544,523	B2	10/2013	Mays
8,581,695	B2	11/2013	Carlson et al.
8,615,562	B1	12/2013	Huang et al.
8,633,797	B2	1/2014	Farris et al.
8,634,777	B2	1/2014	Ekbatani et al.
8,645,708	B2	2/2014	Labaton
8,661,256	B2	2/2014	Willey
8,699,704	B2	4/2014	Liu et al.
8,760,267	B2	6/2014	Bos et al.
8,787,823	B2	7/2014	Justice et al.
8,830,925	B2	9/2014	Kim et al.
8,836,469	B2	9/2014	Fitzgibbon et al.
9,082,293	B2	7/2015	Wellman et al.
9,124,424	B2	9/2015	Aldis
9,142,064	B2	9/2015	Muetzel et al.
9,160,408	B2	10/2015	Krohne et al.
9,280,704	B2	3/2016	Lei et al.
9,317,983	B2	4/2016	Ricci
9,336,637	B2	5/2016	Neil et al.
9,396,376	B1	7/2016	Narayanaswami
9,413,453	B2	8/2016	Sugitani et al.
9,418,326	B1	8/2016	Narayanaswami
2001/0023483	A1	9/2001	Kiyomoto
2002/0034303	A1	3/2002	Farris
2002/0184504	A1	12/2002	Hughes
2002/0191785	A1	12/2002	McBrearty et al.
2002/0191794	A1	12/2002	Farris et al.
2003/0056001	A1	3/2003	Mate et al.
2003/0070092	A1	4/2003	Hawkes et al.
2003/0072445	A1	4/2003	Kuhlman et al.
2003/0147536	A1	8/2003	Andivahis et al.
2003/0177237	A1	9/2003	Stebbings
2003/0191949	A1	10/2003	Odagawa
2003/0227370	A1	12/2003	Brookbank
2004/0019783	A1	1/2004	Hawkes et al.
2004/0081075	A1	4/2004	Tsukakoshi
2004/0174856	A1	9/2004	Brouet et al.
2004/0179485	A1	9/2004	Terrier
2004/0181569	A1	9/2004	Attar et al.
2005/0053022	A1	3/2005	Zettwoch
2005/0058153	A1	3/2005	Santhoff et al.
2005/0101314	A1	5/2005	Levi
2005/0174242	A1	8/2005	Cohen
2005/0285719	A1	12/2005	Stephens
2006/0083187	A1	4/2006	Dekel
2006/0109978	A1	5/2006	Farris et al.
2006/0176171	A1	8/2006	Fitzgibbon et al.
2007/0005806	A1	1/2007	Fitzgibbon et al.
2007/0006319	A1	1/2007	Fitzgibbon et al.
2007/0018861	A1	1/2007	Fitzgibbon et al.
2007/0058811	A1	3/2007	Fitzgibbon
2007/0245147	A1	10/2007	Okeya
2008/0229400	A1	9/2008	Burke
2008/0297370	A1	12/2008	Farris et al.
2009/0016530	A1	1/2009	Farris et al.
2009/0021348	A1	1/2009	Farris et al.
2009/0096621	A1	4/2009	Ferlitsch
2009/0176451	A1	7/2009	Yang et al.
2009/0315672	A1	12/2009	Nantz et al.
2010/0060413	A1	3/2010	Fitzgibbon et al.
2010/0112979	A1	5/2010	Chen et al.
2010/0125509	A1	5/2010	Kranzley et al.
2010/0125516	A1	5/2010	Wankmueller et al.
2010/0199092	A1	8/2010	Andrus et al.
2010/0211779	A1	8/2010	Sundaram
2011/0051927	A1	3/2011	Murray et al.
2011/0296185	A1	12/2011	Kamarthy et al.
2011/0316668	A1	12/2011	Laird
2011/0316688	A1	12/2011	Ranjan et al.
2011/0317835	A1	12/2011	Laird et al.
2011/0320803	A1	12/2011	Hampel et al.
2012/0054493	A1	3/2012	Bradley
2012/0297681	A1	11/2012	Krupke et al.
2013/0170639	A1	7/2013	Fitzgibbon
2013/0268333	A1	10/2013	Ovick et al.
2013/0272520	A1	10/2013	Noda et al.
2014/0169247	A1	6/2014	Jafarian et al.
2014/0289528	A1	9/2014	Baghdasaryan
2015/0222517	A1	8/2015	McLaughlin et al.
2015/0358814	A1	12/2015	Roberts
2016/0021140	A1	1/2016	Fitzgibbon
2016/0198391	A1	7/2016	Orthmann et al.
2016/0261572	A1	9/2016	Liu et al.

FOREIGN PATENT DOCUMENTS

AU	2006200340		8/2006
AU	2008202369	A1	1/2009
AU	2011218848	A1	9/2011
AU	2011202656	A1	1/2012
AU	2007203558	B2	5/2014
CA	2087722	C	7/1998
CA	2193846	C	2/2004
CA	2177410	C	4/2008
CA	2443452	C	7/2008
CA	2684658	A1	10/2008
CA	2708000	A1	12/2010
CA	2456680	C	2/2011
CA	2742018	A1	12/2011
CA	2565505	C	9/2012
CA	2631076	C	9/2013
CA	2790940	C	6/2014
CA	2596188	C	7/2016
CN	101399825	A	4/2009
EP	0265935	B1	5/1991
EP	0937845	A1	8/1999
EP	1024626	A1	8/2000
EP	1 223 700		7/2002
EP	1 313 260	A3	5/2003
EP	1313260		5/2003
EP	1421728	A1	5/2004
EP	1625560	A1	2/2006
EP	1760985		2/2007
EP	1760985	A2	3/2007
EP	0771498	B1	5/2007
EP	1865656	A1	12/2007
EP	2293478	A2	3/2011
EP	2149103	B1	12/2011
EP	2437212	A1	4/2012
EP	1875333	B1	1/2013
EP	2290872	B1	6/2014
EP	2800403	A1	11/2014
FR	2737373		1/1997
GB	2288261		10/1995
GB	2430115		3/2007
GB	2440816		2/2008
GB	2453383	A	4/2009
JP	09322274		12/1997
WO	0010301		2/2000
WO	0010302		2/2000
WO	WO 00/10301		2/2000
WO	03010656		2/2003
WO	03079607	A1	9/2003

OTHER PUBLICATIONS

Morris, Robert. The Hagelin Cipher Machine (M-209): Reconstruction of the Internal Settings, pp. 267-289, Cryptologia, 2(3), (Jul. 1978).

Newman, David B., Jr., et al. 'Public Key Management for Network Security', pp. 11-16, IEE Network Magazine, 1987.

Nickels, Hamilton, 'Secrets of Making and Breading Codes' Paladin Press, 1990, pp. 11-29.

Niederreiter, Harald. Keystream Sequences with a Good Linear Complexity Profile for Every Starting Point, pp. 523-532, Proceedings of Eurocrypt 89, (1989).

(56) **References Cited**

OTHER PUBLICATIONS

NM95HSO1/NM95HSO2 HiSeC.TM. (High Security Code) Generator, pp. 1-19, National Semiconductor, (Jan. 1995).
Otway, Dave and Rees, Owen. Efficient and timely mutual authentication, ACM SIGOPS Operating Systems Review, vol. 21, Issue 1, Jan. 8-10, 1987.
Peebles, Jr., Peyton Z. and Giuma, Tayeb A.; "Principles of Electrical Engineering" McGraw Hill, Inc., 1991, pp. 562-597.
Peyret, Patrice, et al. Smart Cards Provide Very High Security and Flexibility in Subscribers Management, pp. 744-752, IEE Transactions on Consumer Electronics, 36(3), (Aug. 1990).
Postel, J. ed. 'DOD Standard Transmission Control Protocol', pp. 52-133, Jan. 1980.
Postel, Jonathon B., et al. The ARPA Internet Protocol, pp. 261-271, (1981).
Reed, David P. and Kanodia, Rajendra K. Synchronization with Eventcounts and Sequencers, pp. 115-123, Communications of the ACM, vol. 22, No. 2, (Feb. 1979).
Reynolds, J. and Postel, J. Official ARPA-Internet Protocols, Network Working Groups, (Apr. 1985).
Roden, Martin S., "Analog and Digital Communication Systems," Third Edition, Prentice Hall, 1979, pp. 282-460.
Ruffell, J. Battery Low Indicator, p. 15-165, Eleckton Electronics, (Mar. 1989). (See p. 59).
Saab Anti-Theft System: 'Saab's Engine Immobilizing Anti-Theft System is a Road-Block for 'Code-Grabbing' Thieves', pp. 1-2, Aug. 1996; http://www.saabusa.com/news/newsindex/alarm.html.
Savage. J.E. Some Simple Self-Synchronizing Digital Data Scramblers, pp. 449-498, The Bell System Tech. Journal, (Feb. 1967).
Schedule of Confidential Non-Patent Literature Documents; Apr. 1, 2008.
Seberry, J. and Pieprzyk, Cryptography—An Introduction to Computer Security, Prentice Hall of Australia, YTY Ltd, 1989, pp. 134-136.
Secure Terminal Interface Module for Smart Card Application, pp. 1488-1489, IBM: Technical Disclosure Bulletin, vol. 28, No. 4, (Sep. 1985).
Shamir, Adi. 'Embedding Cryptographic Trapdoors in Arbitrary Knapsack Systems', pp. 77-79, Information Processing Letters, 1983.
Shamir, Adi. Embedding cryptographic Trapdoors in Arbitrary Knapsak Systems, pp. 81-85, IEEE Transactions on Computers, vol. C-34, No. 1, (Jan. 1985).
Siegenthaler, T. Decrypting a Class of Stream Ciphers Using Ciphertext Only, pp. 81-85, IEEE Transactions on Computers, vol. C-34, No. 1, (Jan. 1985).
Simmons, Gustavus, J. Message Authentication with Arbitration of Transmitter/Receiver Disputes, pp. 151-165 (1987).
Smith, J.L., et al. An Experimental Application of Crptography to a Remotely Accessed Data System, pp. 282-297, Proceedings of hte ACM, (Aug. 1972).
Smith, Jack, 'Modem Communication Circuits.' McGraw-Hill Book Company, 1986, Chapter 11, pp. 420-454.
Smith, Jack, 'Modem Communication Circuits' McGraw-Hill Book Company, 1986, Chapter 7, pp. 231-294.
Smith. J.L. The Design of Lucifer: a Cryptographic Device for Data Communications, pp. 1-65, (Apr. 15, 1971).
Soete, M. Some constructions for authentication—secrecy codes, Advances in Cryptology—Eurocrypt '88, Lecture Notes in Computer Science 303 (1988), 57-75.
Steven Dawson, Keeloq.RTM. Code Hopping Decoder Using Secure Learn, AN662, 1997 Microchip Technology, Inc., 1-16.
Svigals, J. Limiting Access to Data in an Indentification Card Having A Micro-Processor, pp. 580-581, IBM: Technical Disclosre Bulletin, vol. 27, No. 1B, (Jun. 1984).
Thatcham: The Motor Insurance Repair Research Centre, The British Insurance Industry's Criteria for Vehicle Security (Jan. 1993) (Lear 18968-19027), pp. 1-36.
Transaction Completion Code Based on Digital Signatures, pp. 1109-1122, IBM: Technical Disclosure Bulletin, vol. 28, No. 3, (Aug. 1985).
Turn, Rein. Privacy Transformations for Databank Systems, pp. 589-601, National Computer Conference, (1973).
U.S. District Court, Northern District of Illinois, Eastern Division, Civil Action No. 05-C-3449, Declaration of Robert Louis Stevenson, Jr., Jun. 26, 2009.
U.S. District Court, Northern District of Illinois, Eastern Division, Civil Action No. 05-C-3449, JCI's Local Rule 56.1 Statement of Undisputed Facts in Support of Their Motion for Summary Judgment of Infringement of the '056 Patent; Jul. 6, 2009.
U.S. District Court, Northern District of Illinois, Eastern Division, Civil Action No. 05-C-3449, JCI's Local Rule 56.1 Statement of Undisputed Facts in Support of Their Motion for Summary Judgment of Infringement of the '544 Patent; Jul. 6, 2009.
U.S. District Court, Northern District of Illinois, Eastern Division, Civil Action No. 05-C-3449, JCI's Memorandum of Law in Support of its Motion for Summary Judgment of Infringement of the '056 Patent, Jul. 6, 2009.
U.S. District Court, Northern District of Illinois, Eastern Division, Civil Action No. 05-C-3449, JCI's Memorandum of Law in Support of its Motion for Summary Judgment of Infringement of the '544 Patent, Jul. 6, 2009.
U.S. District Court, Northern District of Illinois, Eastern Division, Civil Action No. 05-C-3449, Memorandum Opinion and Order, Nov. 24, 2010.
U.S. District Court, Northern District of Illinois, Eastern Division, Civil Action No. 05-CV-3449, Defendant Lear Corporation's Answer to Plaintiffs' Second Amended Complaint, Defenses, and Counterclaim; Sep. 8, 2008.
U.S. District Court, Northern District of Illinois, Eastern Division, Civil Action No. 05-CV-3449, Defendant Lear Corporation's Reply Memorandum in Support of Its Motion to Stay Effectiveness of Any Preliminary Injunction; Apr. 17, 2007.
U.S. District Court, Northern District of Illinois, Eastern Division, Civil Action No. 05-CV-3449, Lear Corporation Memorandum of Law in Support of Its Motion for Summary Judgment of U.S. Pat. No. 7,412,056; Dec. 8, 2008.
U.S. District Court, Northern District of Illinois, Eastern Division, Civil Action No. 05-CV-3449, Lear Corporation's Answer, Affirmative Defenses and Counterclaims to Plaintiffs' Amended Complaint; Oct. 24, 2005.
U.S. District Court, Northern District of Illinois, Eastern Division, Civil Action No. 05-CV-3449, Lear Corporation's Memorandum of Law in Support of Its Emergency Motion to Stay the Effectiveness of the Preliminary Injunction Memorandum Opinion and Order Entered Mar. 30, 2007.
U.S. District Court, Northern District of Illinois, Eastern Division, Civil Action No. 05-CV-3449, Lear Corporation's Memorandum of Law in Support of Its Motion for Summary Judgment, May 22, 2008.
U.S. District Court, Northern District of Illinois, Eastern Division, Civil Action No. 05-CV-3449, Lear Corporation's Motion for Reconsideration of the Court's Sep. 11, 2006 Memorandum Opinion and Order Regarding Claim Construction.
U.S. District Court, Northern District of Illinois, Eastern Division, Civil Action No. 05-CV-3449, Lear Corporation's Post-Markman Brief.
U.S. District Court, Northern District of Illinois, Eastern Division, Civil Action No. 05-CV-3449, Memorandum Opinion and Order, Apr. 25, 2007.
U.S. District Court, Northern District of Illinois, Eastern Division, Civil Action No. 05-CV-3449, Memorandum Opinion and Order, Feb. 20, 2007.
German Patent Application No. 10 2006 003 808.3; Official Action dated May 16, 2018; 6 pages.
Fischer, Elliot. Uncaging the Hagelin Cryptograph, pp. 89-92, Cryptologia, vol. 7, No. 1, (Jan. 1983).
Fragano, Maurizio. Solid State Key/Lock Security System, pp. 604-607, IEEE Transactions on Consumer Electronics, vol. CE-30, No. 4, (Nov. 1984).

(56) **References Cited**

OTHER PUBLICATIONS

G. Davis, Marcstar.TM. TRC1300 and TRC1315 Remote Control Transmitter/Receiver, Texas Instruments, Sep. 12, 1994. 1-24.
German Patent Application No. 10 2006 003 808.8; Official Action dated Feb. 14, 2019 (with translation of relevant parts); 6 pages.
Godlewski, Ph. and Camion P. 'Manipulations and Errors, Delection and Localization,' pp. 97-106, Proceedings of Eurocrypt 88, 1988.
Gordon, Professor J., Police Scientific Development Branch, Designing Codes for Vehicle Remote Security Systems, (Oct. 1994), pp. 1-20.
Gordon, Professor J., Police Scientific Development Branch, Designing Rolling Codes for Vehicle Remote Security Systems, (Aug. 1993), pp. 1-19.
Greenlee, B.M., Requirements for Key Management Protocols in the Wholesale Financial Services Industry, pp. 22 28, IEEE Communications Magazine , Sep. 1985.
Guillou, Louis C. and Quisquater, Jean-Jacques. 'A Practical Zero-Knowledge Protocol Fitted to Security Microprocessor Minimizing Both Transmission and Memory', pp. 123-128, Advances in Cryptology-Eurocrypt 88, 1988.
Guillou, Louis C. Smart Cards and Conditional Access, pp. 481-489, Proceedings of Eurocrypt, (1984).
Habermann, A. Nico, Synchronization of Communicating Processes, pp. 171 176, Communications, Mar. 1972.
Hagelin C-35/C-36 (The), (1 page) Undated. http://hem.passagen.se/tan01/C035.HTML.
Haykin, Simon, "An Introduction to Analog and Digital Communications" 213, 215 (1989).
IEEE 100; The Authoritative Dictionary of IEEE Standards Terms, Seventh Ediciton, Published by Standards Information Network, IEEE Press, Copyright 2000.
International Search Report for PCT/US03/25308 dated Mar. 25, 2004.
ISO 8732: 1988(E): Banking Key Management (Wholesale) Annex D: Windows and Windows Management, Nov. 1988.
ITC Tutorial; Investigation No. 337-TA-417; (TCG024374-24434); Dated: Jul. 7, 1999.
Jones, Anita K. Protection Mechanisms and The Enforcement of Security Policies, pp. 228-251, Carnegie-Mellon University, Pittsburgh, PA, (1978).
Jueneman, R.R. et al. 'Message Authentication', pp. 29-40, IEEE Communications Magazine, vol. 23, No. 9, Sep. 1985.
Kahn, Robert E. The Organization of Computer Resources Into A Packet Radio Network, pp. 177-186, National Computer Conference, (1975).
Keeloq.RTM. Code Hopping Decoder, HCS500, 1997 Microchip Technology, Inc., 1-25.
Keeloq.RTM. Code Hopping Encoder, HCS300, 1996 Microchip Technology, Inc., 1-20.
Keeloq.RTM. NTQ 105 Code Hopping Encoder, pp. 1-8, Nanoteq (Pty.) Ltd., (Jul. 1993).
Keeloq.RTM. NTQ 125D Code Hopping Decoder, pp. 1-9, Nanoteq (pty.) Ltd., (Jul. 1993).
Kent, Stephen T. A Comparison of Some Aspects of Public-Key and Conventional Cryptosystems, pp. 4.3.1-5, ICC '79 Int. Conf. on Communications, Boston, MA, (Jun. 1979).
Kent, Stephen T. Comments on 'Security Problems in the TCP/IP Protocol Suite', pp. 10-19, Computer Communication Review, vol. 19, Part 3, (Jul. 1989).
Kent, Stephen T. Encryption-Based Protection Protocols for Interactive User-Computer Communication, pp. 1-121, (May 1976). (See pp. 50-53).
Kent, Stephen T. Protocol Design Consideration for Network Security, pp. 239-259, Proc. NATO Advanced Study Institute on Interlinking of Computer Networks, (1979).
Kent, Stephen T. Security Requirements and Protocols for a Broadcast Scenario, pp. 778-786, IEEE Transactions on Communications, vol. com-29, No. 6, (Jun. 1981).
Kent, Stephen T., et al. Personal Authorization System for Access Control to the Defense Data Network, pp. 89-93, Conf. Record of Eascon 82 15.sup.th Ann Electronics & Aerospace Systems Conf., Washington, D.C. (Sep. 1982).
Konheim, A.G. Cryptography: A Primer, pp. 285-347, New York, (John Wiley, 1981).
Koren, Israel, "Computer Arithmetic Algorithms" Prentice Hall, 1978, pp. 1-15.
Kruh, Louis. Device anc Machines: The Hagelin Cryptographer, Type C-52, pp. 78-82, Cryptologia, vol. 3, No. 2, (Apr. 1979).
Kruh, Louis. How to Use the German Enigma Cipher Machine: A photographic Essay, pp. 291-296, Cryptologia, vol. No. 7, No. 4 (Oct. 1983).
Kuhn, G.J., et al. A Versatile High-Speed Encryption Chip, Infosec '90 Symposium, Pretoria, (Mar. 16, 1990).
Kuhn. G.J. Algorithms for Self-Synchronizing Ciphers, pp. 159-164, Comsig 88, University of Pretoria, Pretoria, (1988).
Lamport, Leslie. The Synchronization of Independent Processes, pp. 15-34, Acta Informatica, vol. 7, (1976).
Lear Corporation's Memorandum of Law in Support of Its Motion for Summary Judgment; May 22, 2008.
Linn, John and Kent, Stephen T. Electronic Mail Privacy Enhancement, pp. 40-43, American Institute of Aeronautics and Astronautics, Inc. (1986).
Lloyd, Sheelagh. Counting Functions Satisfying a Higher Order Strict Avalanche Criterion, pp. 63-74, (1990).
Marneweck, Kobus. Guidelines for KeeLoq.RTM. Secure Learning Implementation, TB007, pp. 1-5, 1987 Microchip Technology, Inc.
Massey, James L. The Difficulty with Difficulty, pp. 1-4, (Updated). http://www.iacr.org/conferences/ec96/massey/html/framemassey.html.
McIvor, Robert. Smart Cards, pp. 152-159, Scientific American, vol. 253, No. 5, (Nov. 1985).
Meier, Willi. Fast Correlations Attacks on Stream Ciphers (Extended Abstract), pp. 301-314, Eurocrypt 88, IEEE, (1988).
Meyer, Carl H. and Matyas Stephen H. Cryptography: A New Dimension in Computer Data Security, pp. 237-249 (1982).
Michener, J.R. The 'Generalized Rotor' Cryptographic Operator and Some of Its Applications, pp. 97-113, Cryptologia, vol. 9, No. 2, (Apr. 1985).
Microchip Technology, Inc., Enhanced Flash Microcontrollers with 10-Bit A/D and nano Watt Technology, PIC18F2525/2620/4525/4620 Data Sheet, 28/40/44-Pin, .COPYRGT.2008.
Microchip v. *The Chamberlain Group, Inc.*, (TCG019794-019873); Deposition of J. Fitzgibbon; Partially redacted; Dated: Jan. 7, 1999.
Microchip v. *The Chamberlain Group, Inc.*, (TCG019874-019918); Deposition of J. Fitzgibbon; Dated: Mar. 16, 1999.
Microchip v. *The Chamberlain Group, Inc.*, Civil Action No. 98-C-6138; (TCG024334-24357); Declaration of V. Thomas Rhyne; Dated: Feb. 22, 1999.
U.S. District Court, Northern District of Illinois, Eastern Division, Civil Action No. 05-CV-3449, Memorandum Opinion and Order, Sep. 11, 2006.
U.S. District Court, Northern District of Illinois, Eastern Division, Civil Action No. 05-CV-3449, Memorandum Opinion and Order; Mar. 30, 2007.
U.S. District Court, Northern District of Illinois, Eastern Division, Civil Action No. 05-CV-3449, Notice of Motion and Motion for Leave to File Defendant Lear Corporation's Sur-Reply to Chamberlain's and JCI's Reply Memorandum in Support of Motion for Preliminary Injunction; Mar. 30, 2006.
U.S. District Court, Northern District of Illinois, Eastern Division, Civil Action No. 05-CV-3449, Plaintiffs' Opposition to Lear Corporation's Motion to Stay the Effectiveness of the Preliminary Injunction Memorandum Opinion and Order Entered Mar. 30, 2007.
U.S. District Court, Northern District of Illinois, Eastern Division, Civil Action No. 05-CV-3449, Plaintiffs' Response to Lear's Mar. 2, 2007 Supplemental Memorandum.
U.S. District Court, Northern District of Illinois, Eastern Division, Civil Action No. 05-CV-3449, Plaintiffs' Response to Lear's Motion for Reconsideration of the Court's Sep. 11, 2006 Ruling Regarding Claim Construction; Oct. 4, 2006.

(56) **References Cited**

OTHER PUBLICATIONS

U.S. District Court, Northern District of Illinois, Eastern Division, Civil Action No. 05-CV-3449, Plaintiffs' Surreply Memorandum in Opposition to Lear's Motion to Stay the Preliminary Injunction, Apr. 24, 2007.
U.S. District Court, Northern District of Illinois, Eastern Division, Civil Action No. 05-CV-3449, Plaintiffs' Surreply Memorandum in Support of Motion for Preliminary Injunction.
U.S. District Court, Northern District of Illinois, Eastern Division, Civil Action No. 05-CV-3449, Reply Brief in Support of Lear's Motion for Reconsideration of the Court's Sep. 11, 2006 Ruling Regarding Claim Construction.
U.S. District Court, Northern District of Illinois, Eastern Division, Civil Action No. 05-CV-3449, Supplemental Memorandum in Support of Defendant Lear Corporation's Opposition to Plaintiffs' Motion for Preliminary Injunction; Mar. 2, 2007.
U.S. District Court, Northern District of Illinois, Eastern Division, Civil Action No. 05-CV-3449, Transcript of Deposition of Bradford L. Farris, Jan. 12, 2006.
U.S. District Court, Northern District of Illinois, Eastern Division, Civil Action No. 05-CV-3449, Transcript of Deposition of Hubert E. Dunsmore, Jan. 12, 2006.
U.S. District Court, Northern District of Illinois, Eastern Division, Civil Action No. 05-CV-3449, Transcript of Proceedings Before the Honorable James B. Moran, May 31, 2005.
U.S. District Court, Northern District of Illinois, Eastern Division, Civil Action No. 05-CV-3449, Transcript of Proceedings Before the Honorable James B. Moran, May 31, 2006.
United States Court of Appeals for the Federal Circuit, Appeal from the United States District Court for the Northern District of Illinois in Case No. 05-CV-3449, Brief of Defendant-Appellant Lear Corporation.
United States Court of Appeals for the Federal Circuit, Appeal from the United States District Court for the Northern District of Illinois in Case No. 05-CV-3449, Brief of the Chamberlain Group, Inc. and Johnson Controls Interiors LLC; Aug. 8, 2007.
United States Court of Appeals for the Federal Circuit, Appeal from the United States District Court for the Northern District of Illinois in Case No. 05-CV-3449, Combined Petition for Panel Rehearing and Rehearing En Banc of Chamberlain Group, Inc.and Johnson Controls Interiors LLC; Dated Mar. 19, 2008.
United States Court of Appeals for the Federal Circuit, Appeal from the United States District Court for the Northern District of Illinois in Case No. 05-CV-3449, Reply Brief of Defendant-Appellant Lear Corporation, Aug. 29, 2007.
United States Court of Appeals for the Federal Circuit, Appeal from the United States District Court, Northern District of Ilinois in Case No. 05-CV-3449, Appellate Decision, Feb. 19, 2008.
United States Court, Northern District of Illinois, Eastern Division, Civil Action 05 C 3449, Notice Pursuant to 35 U.S.C. 282, Mar. 4, 2011.
United States International Trade Commission in the Matter of Certain Code Hopping Remote Control Systems, Including Components and Integrated Circuits Used Therein; Investigation No. 337-TA-417; Expert Report of Dr. V. Thomas Rhyne; (TCG019919-19959); Partially redacted; Dated Jul. 7, 1999.
United States International Trade Commission, Washington, D., Investigation No. 337-TA-417; Respondents' Answer to Complaint and Notice of Investigation, Jan. 26, 1999.
Voydock, Victor L. and Kent, Stephen T. 'Security in High-Level Network Protocols', IEEE Communications Magazine, pp. 12-25, vol. 23, No. 7, Jul. 1985.
Voydock, Victor L. and Kent, Stephen T. 'Security Mechanisms in High-Level Network Protocols', Computing Surveys, pp. 135-171, vol. 15, No. 2, Jun. 1983.
Voydock, Victor L. and Kent, Stephen T. Security Mechanisms in a Transport Layer Protocol, pp. 325-341, Computers & Security, (1985).
Watts, Charles and Harper John. How to Design a HiSec.TM. Transmitter, pp. 1-4, National Semiconductor, (Oct. 1994).
Weinstein, S.B. Smart Credit Cards: The Answer to Cashless Shopping, pp. 43-49, IEEE Spectrum, (Feb. 1984).
Weissman, C. Securtiy Controls in the ADEPT-50 Time-Sharing Syustem, pp. 119-133, AFIPS Full Joint Compuer Conference, (1969).
Welsh, Dominic, Codes and Cryptography, pp. 7.0-7.1, (Clarendon Press, 1988).
Wolfe, James Raymond, "Secret Writing—The Craft of the Cryptographer" McGraw-Hill Book Company 1970, pp. 111-122, Chapter 10.
British Application No. GB1110709.1; Combined Search and Examination Report Under Sections 17 and 18(3); dated Sep. 29, 2011.
Combined Search and Examination Reports Under Sections 17 and 18(3); British Patent Application No. GB0920612.9; dated: Dec. 16, 2009.
British Combined Search and Examination Report Under Sections 17 and 18(3); British Patent Application No. GB1000541.1; dated Jan. 28, 2010.
British Combined Search and Examination Report Under Sections 17 and 18(3); British Patent Application No. GB1104752.9; dated Apr. 11, 2011.
British Examination Report Under Section 18(3); British Patent Application No. GB0601795.8; dated Apr. 22, 2009.
British Examination Report Under Section 18(3); British Patent Application No. GB0613068.6; dated May 6, 2010.
British Examination Report Under Section 18(3); British Patent Application No. GB0613068.6; dated Nov. 26, 2010.
British Patent Application No. GB1110710.9; Combined Search and Examination Report Under Sections 17 and 18(3); dated Sep. 30, 2011.
British Search Report Under Section 17(5); British Patent Application No. GB0613068.6; dated Oct. 12, 2006.
British Search Report Under Section 17; British Patent Application No. GB0601795.8; dated May 22, 2006.
British Search Report Under Section 17; British Patent Application No. GB0613068.6; dated Aug. 23, 2006.
British Search Report Under Section 17; British Patent Application No. GB0715089.9 dated May 9, 2008.
British Search Report Under Section 18(3); British Patent Application No. GB0613068.6; dated Oct. 12, 2006.
Canadian Patent Application No. 2,551,295; Office Action dated May 6, 2013.
Examination Report Under Section 18(3) From British Patent Application No. GB0601795.8; dated Jan. 28, 2010.
Examination Report Under Section 18(3) From British Patent Application No. GB0601795.8; dated Sep. 25, 2009.
Examination Report Under Section 18(3) From British Patent Application No. GB0920612.9; dated Jan. 28, 2010.
Examination Report Under Section 18(3) From British Patent Application No. GB0613068.6; dated Jan. 31, 2011.
Examination Report Under Section 18(3) From British Patent Application No. GB0715089.9; dated Sep. 30, 2010.
Search Report Under Section 17, Application No. GB0715089.9; dated Nov. 27, 2007.
Canadian Patent Application No. 2,926,281, Canadian Office Action dated Dec. 29, 2016.
Australian Patent Application No. 2016203457; Examination Report No. 1; dated May 29, 2017.
U.S. Appl. No. 11/044,411; Office Action dated Oct. 20, 2005.
U.S. Appl. No. 11/058,135; Office Action dated Oct. 6, 2010.
U.S. Appl. No. 11/480,288; Office Action dated Oct. 30, 2006.
U.S. Appl. No. 11/501,455; Office Action dated Jul. 7, 2010.
U.S. Appl. No. 11/501,455; Office Action dated Sep. 21, 2010.
U.S. Appl. No. 12/822,499; Office Action dated Jan. 17, 2013.
U.S. Appl. No. 13/777,787; Office Action dated Aug. 19, 2013.
Australian Examiner's First Report on Patent Application No. 2006200340 dated Oct. 16, 2009.
Australian Patent Examination Report No. 1, Cited in Australian Patent Application No. 2014210605 dated May 29, 2015.
Canadian Patent Application No. 2,596,188; Canadian Office Action dated Apr. 13, 2015.
Canadian Patent Application No. 2,596,188; Canadian Office Action dated Jan. 15, 2014.

(56) **References Cited**

OTHER PUBLICATIONS

Examination Report Under Section 18(3) From British Patent Application No. GB0601795.8; dated Dec. 16, 2009.
Examination Report Under Section 18(3) From British Patent Application No. GB0613067.8; dated Sep. 9, 2009.
Australian Patent Examination Report No. 1, Cited in Australian Patent Application No. 2007203558 dated Jan. 15, 2013.
U.S. Appl. No. 14/219,607; Office Action dated Oct. 28, 2014.
U.S. Appl. No. 11/172,525; Office Action dated Apr. 2, 2009.
U.S. Appl. No. 11/172,525; Office Action dated Oct. 15, 2009.
U.S. Appl. No. 11/172,525; Office Action dated Mar. 17, 2010.
U.S. Appl. No. 11/172,525; Office Action dated Sep. 9, 2010.
U.S. Appl. No. 11/172,525; Office Action dated Mar. 21, 2011.
U.S. Appl. No. 11/172,525; Office Action dated Sep. 16, 2011.
U.S. Appl. No. 11/480,288; Office Action dated Apr. 9, 2008.
U.S. Appl. No. 13/777,787; Office Action dated Dec. 5, 2013.
U.S. Appl. No. 13/777,787; Office Action dated Mar. 9, 2017.
Canadian Office Action dated Dec. 27, 2017, from corresponding Canadian Patent Application No. 2,926,281.
Australian Patent Application No. 2017265017; First Examination Report dated Oct. 8, 2018; 4 pages.
German Patent Application No. 10 2006 003 808.8; Official Action dated Oct. 9, 2018 (with translation of relevant parts); 7 pages.
Abrams, and Podell, 'Tutorial Computer and Network Security,' District of Columbia: IEEE, 1987. pp. 1075-1081.
Abramson, Norman. 'The Aloha System—Another alternative for computer communications,' pp. 281-285, University of Hawaii, 1970.
Adams, Russ, Classified, data-scrambling program for Apple II, Info-World, vol. 5, No. 3; Jan. 31, 1988.
Alexi, Werner, et al. 'RSA and Rabin Functions: Certain Parts Are As Hard As The Whole', pp. 194-209, Siam Computing, vol. 14, No. 2, Apr. 1988.
Allianz: Allianz-Zentrum for Technik GmbH—Detailed Requirements for Fulfilling the Specification Profile for Electronically Coded OEM Immobilizers, Issue 22, (Jun. 1994 (Translation Jul. 5, 1994).
Anderson, Ross. 'Searching for the Optium Correlation Attack', pp. 137-143, Computer Laboratory, Pembroke Street, Cambridge CB2 3QG, Copyright 1995.
Arazi, Benjamin, Vehicular Implementations of Public Key Cryptographic Techniques, IEEE Transactions on Vehicular Technology, vol. 40, No. 3, Aug. 1991, 646-653.
Baran, P. Distribution Communications, vol. 9, 'Security Secrecy and Tamper-free Communications', Rand Corporation, 1964.
Barbaroux, Paul. 'Uniform Results in. Polynomial-Time Security', pp. 297-306, Advances in Cryptology—Eurocrypt 92, 1992.
Barlow, Mike, 'A Mathematical Word Block Cipher,' 12 Cryptologia 256-264 (1988).
Bellovin, S.M. 'Security Problems in the TCPIIP Protocol Suite', pp. 32-49, Computer Communication Review, New Jersey, Reprinted from Computer Communication Review, vol. 19, No. 2, pp. 32-48, Apr. 1989.
Beutelspacher, Albrecht. Advances in Cryptology—Eurocrypt 87: 'Perfect and Essentially Perfect Authentication Schemes' (Extended Abstract), pp. 167-170, Federal Republic of Germany, Undated.
Bloch, Gilbert. Enigma Before Ultra Polish Work and The French Contribution, pp. 142-155, Cryptologia 11(3), (Jul. 1987).
Access Transmitters—Access Security System, pp. 1-2, htpp://www.webercreations.com/access/security.html, dated Jul. 16, 1997.
German Patent Application No. 10 2007 036 647.9; Official Communication dated Jul. 4, 2019, 4 pages.
USPTO; U.S. Appl. No. 14/867,633; Office Action dated Sep. 17, 2019; (pp. 1-25).
German Patent Application No. 10 2006 063 085.8; Official Action dated Nov. 7, 2019 (with translation of relevant parts); 14 pages.
U.S. Appl. No. 14/867,633, Office Action dated Jul. 19, 2018, 22 pages.
First Examination Report, from corresponding Austalian Application No. 2019240615; dated Aug. 13, 2020; 4 pages.
U.S. Appl. No. 13/777,787; Notice of Allowance dated Oct. 16, 2020; (pp. 1-5).
U.S. Appl. No. 14/867,633; Corrected Notice of Allowability dated Oct. 27, 2020; (pp. 1-2).
British Search Report for Application No. GB0613068.6 Dated Aug. 23, 2006.
Search Report Under Section 17; Application No. GB0715089.9: Date of Search: May 8, 2008.
Australian Examiners First Report on Patent Application No. 2006202850 Dated Feb. 25, 2010.
British Examination Report Under Section 17(5); British Application No. GB0715089.9 Dated Nov. 28, 2007.
U.S. Office Action Dated Mar. 21, 2011 from U.S. Appl. No. 11/172,525.
Examination Report Under Section 18(3) from British Patent Application No. GB0715089.9 dated Apr. 11, 2011.
Search Report Under Section 17 from British Patent Application No. GB0613068.6; Date of Search: Oct. 12, 2006.
U.S. Appl. No. 11/172,524; Office Action Dated Apr. 9, 2009.

* cited by examiner

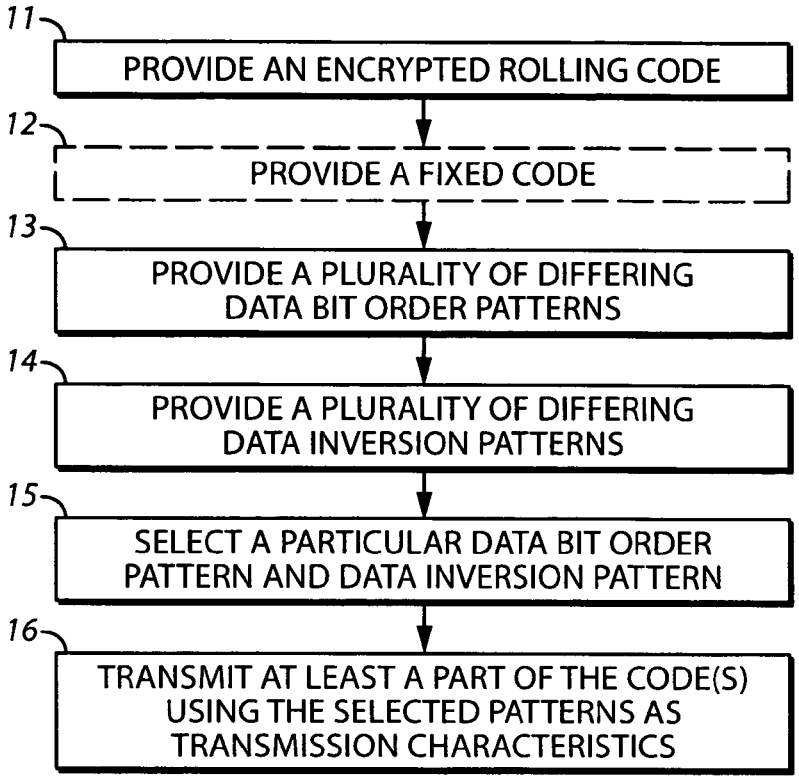
11
PROVIDE AN ENCRYPTED ROLLING CODE
12
PROVIDE A FIXED CODE
13
PROVIDE A PLURALITY OF DIFFERING DATA BIT ORDER PATTERNS
14
PROVIDE A PLURALITY OF DIFFERING DATA INVERSION PATTERNS
15
SELECT A PARTICULAR DATA BIT ORDER PATTERN AND DATA INVERSION PATTERN
16
TRANSMIT AT LEAST A PART OF THE CODE(S) USING THE SELECTED PATTERNS AS TRANSMISSION CHARACTERISTICS

FIG. 1

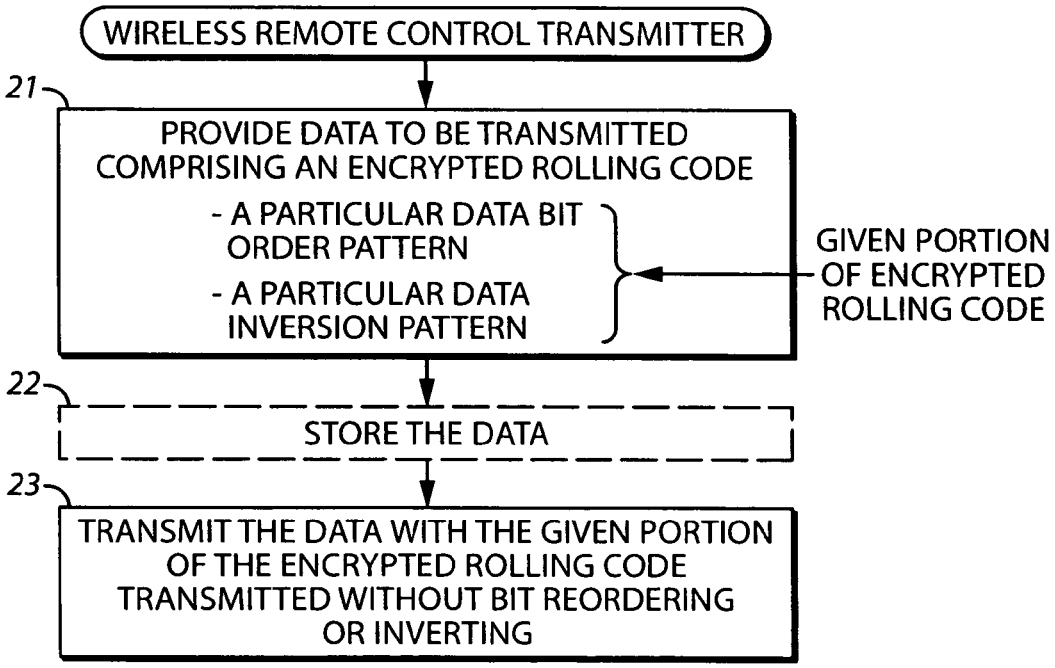
WIRELESS REMOTE CONTROL TRANSMITTER
21
PROVIDE DATA TO BE TRANSMITTED COMPRISING AN ENCRYPTED ROLLING CODE
- A PARTICULAR DATA BIT ORDER PATTERN
- A PARTICULAR DATA INVERSION PATTERN
GIVEN PORTION OF ENCRYPTED ROLLING CODE
22
STORE THE DATA
23
TRANSMIT THE DATA WITH THE GIVEN PORTION OF THE ENCRYPTED ROLLING CODE TRANSMITTED WITHOUT BIT REORDERING OR INVERTING

FIG. 2

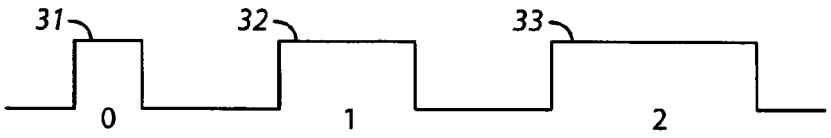

FIG. 3
(Prior Art)

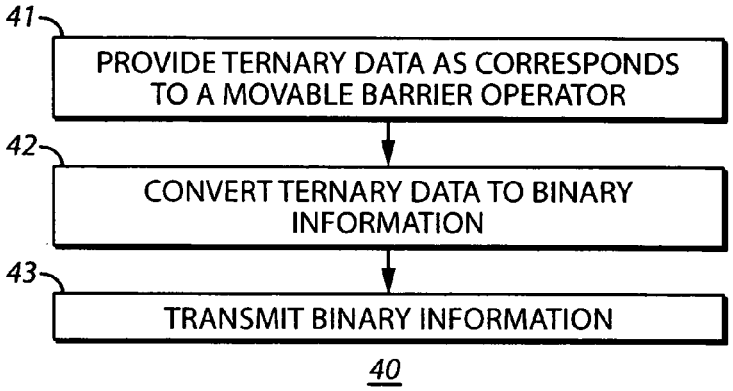

FIG. 4

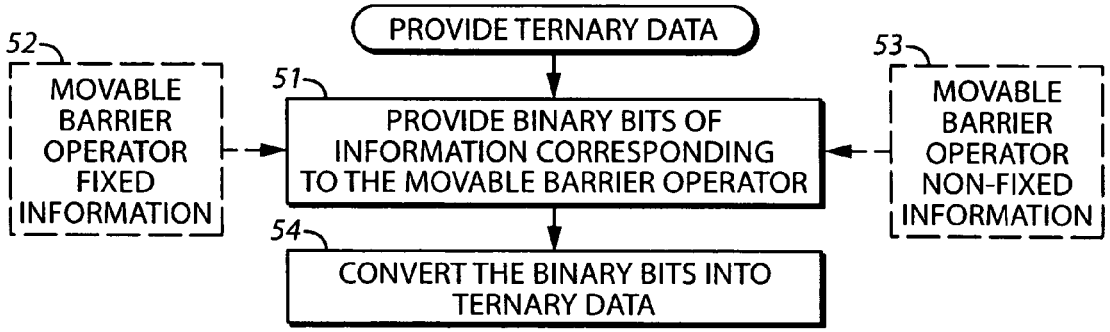

FIG. 5

61

TERNARY DATA	BINARY BIT PAIRS
0	00
1	01
2	10
ILLEGAL	11

FIG. 6

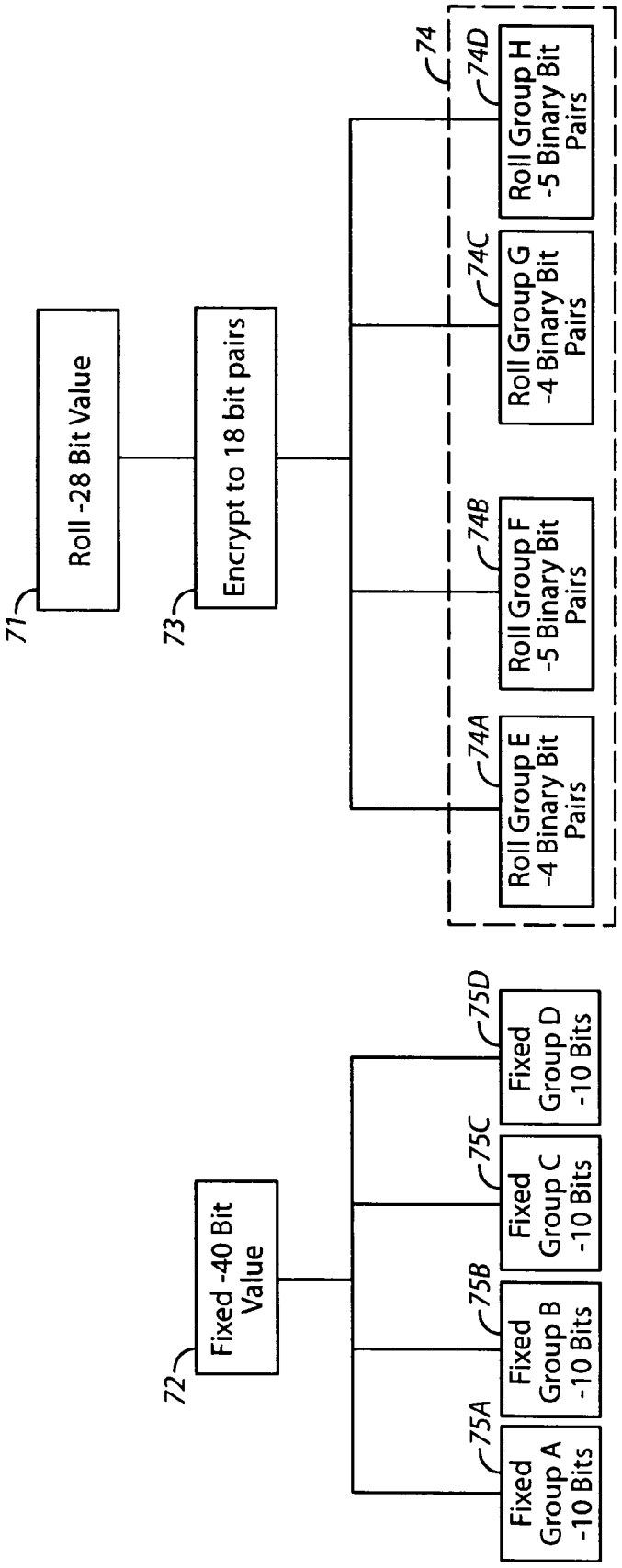
Roll -28 Bit Value
71
Encrypt to 18 bit pairs
73
74
Roll Group E -4 Binary Bit Pairs
74A
Roll Group F -5 Binary Bit Pairs
74B
Roll Group G -4 Binary Bit Pairs
74C
Roll Group H -5 Binary Bit Pairs
74D
Fixed -40 Bit Value
72
Fixed Group A -10 Bits
75A
Fixed Group B -10 Bits
75B
Fixed Group C -10 Bits
75C
Fixed Group D -10 Bits
75D

FIG. 7

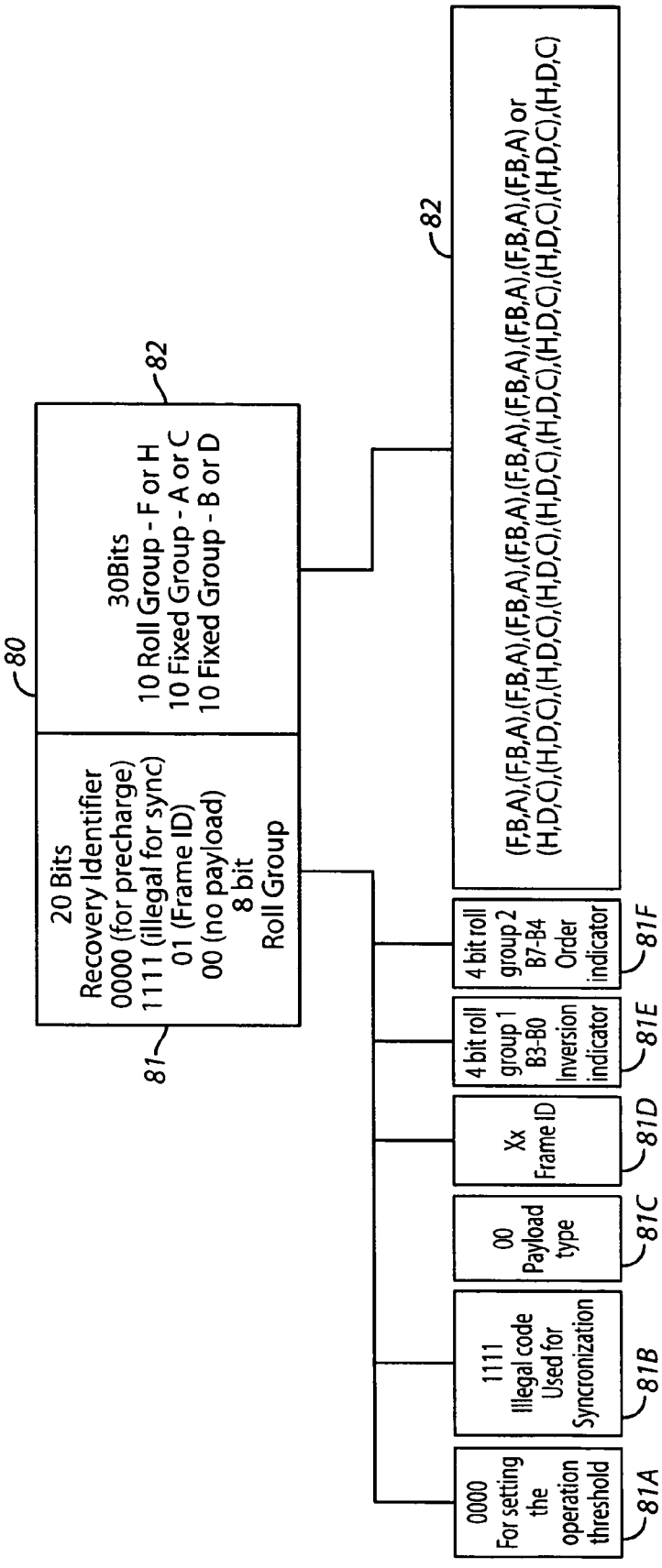
80
20 Bits
Recovery Identifier
0000 (for precharge)
1111 (illegal for sync)
01 (Frame ID)
00 (no payload)
8 bit
Roll Group
81
30Bits
10 Roll Group - F or H
10 Fixed Group - A or C
10 Fixed Group - B or D
82
82
(F,B,A),(F,B,A),(F,B,A),(F,B,A),(F,B,A),(F,B,A),(F,B,A),(F,B,A),(F,B,A) or
(H,D,C),(H,D,C),(H,D,C),(H,D,C),(H,D,C),(H,D,C),(H,D,C),(H,D,C),(H,D,C)
0000
For setting the operation threshold
81A
1111
Illegal code Used for Syncronization
81B
00
Payload type
81C
Xx
Frame ID
81D
4 bit roll group 1 B3-B0
Inversion indicator
81E
4 bit roll group 2 B7-B4
Order indicator
81F

FIG. 8

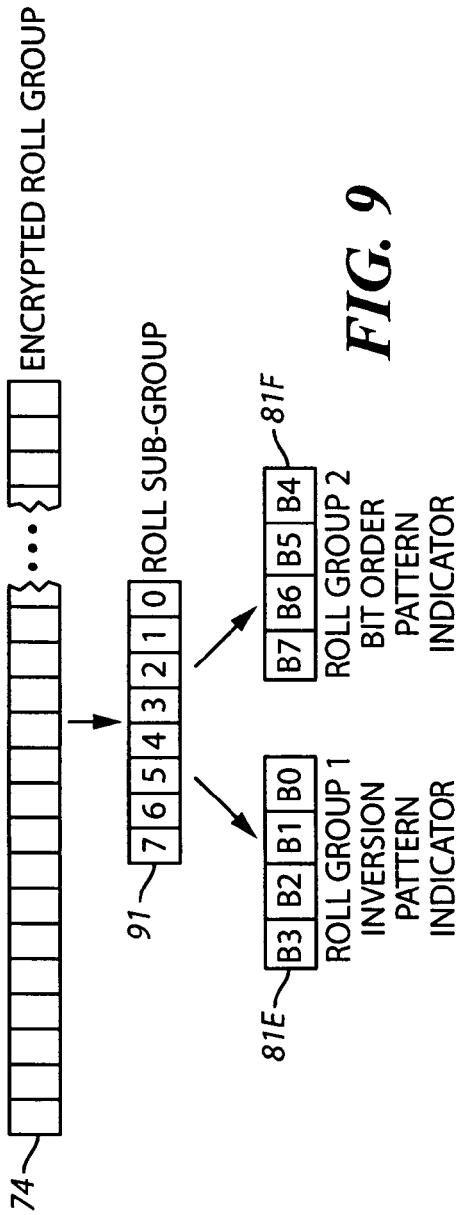

FIG. 9

101

B7	B6	B5	B4	Order of bits	B3	B2	B1	B0	Inversion Pattern
0	0	0	0	F/H,B/D,A/C	0	0	0	0	Normal Normal Normal
0	0	0	1	F/H,A/C,B/D	0	0	0	1	Normal Normal Invert
0	0	1	0	A/C,B/D,F/H	0	0	1	0	Normal Invert Normal
0	1	0	0	A/C,F/H,B/D	0	1	0	0	Normal Invert Invert
0	1	0	1	B/D,F/H,A/C	0	1	0	1	Invert Normal Normal
0	1	1	0	B/D,A/C,F/H	0	1	1	0	Invert Normal Invert
1	0	0	0	F/H,A/C,B/D	1	0	0	0	Invert Invert Normal
1	0	0	1	A/C,F/H,B/D	1	0	0	1	Invert Invert Invert
1	0	1	0	B/D,A/C,F/H	1	0	1	0	Invert Invert Invert

FIG. 10

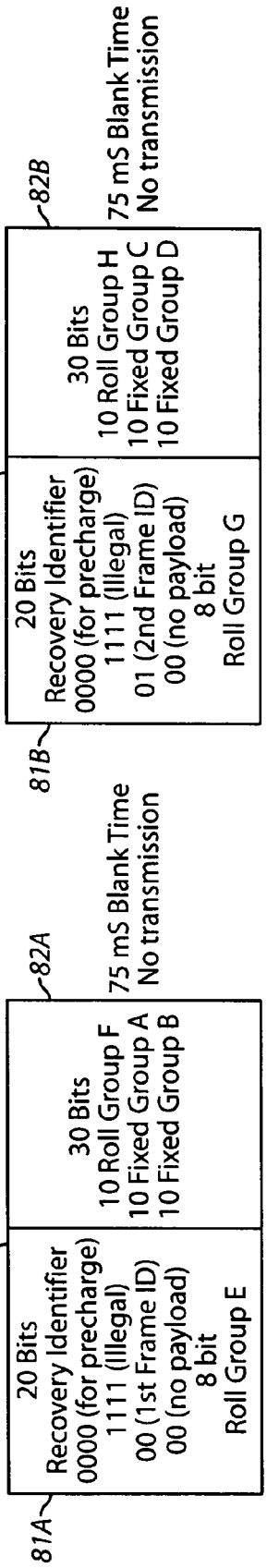
81A
80A
20 Bits
Recovery Identifier
0000 (for precharge)
1111 (Illegal)
00 (1st Frame ID)
00 (no payload)
8 bit
Roll Group E
82A
30 Bits
10 Roll Group F
10 Fixed Group A
10 Fixed Group B
75 mS Blank Time
No transmission
81B
80B
20 Bits
Recovery Identifier
0000 (for precharge)
1111 (Illegal)
01 (2nd Frame ID)
00 (no payload)
8 bit
Roll Group G
82B
30 Bits
10 Roll Group H
10 Fixed Group C
10 Fixed Group D
75 mS Blank Time
No transmission

FIG. 11

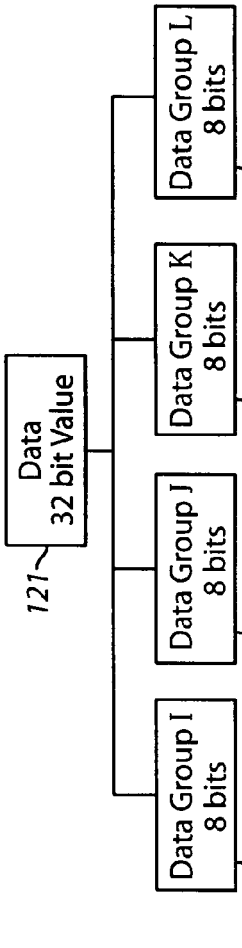
121
Data
32 bit Value
122A
Data Group I
8 bits
122B
Data Group J
8 bits
122C
Data Group K
8 bits
122D
Data Group L
8 bits

FIG. 12

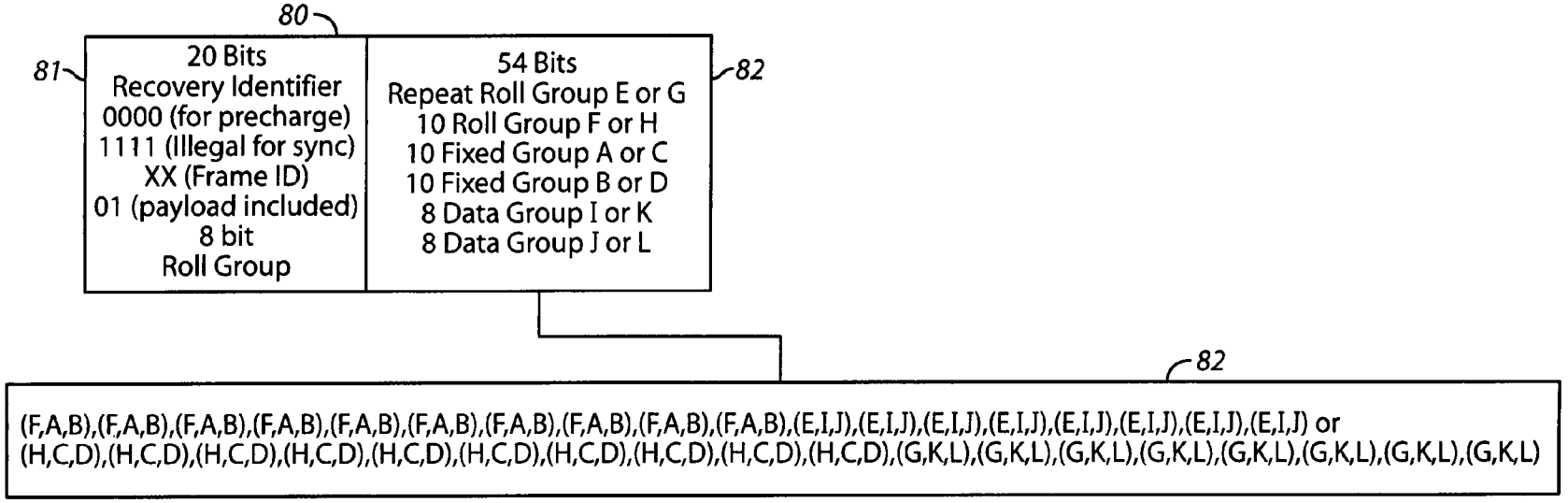

FIG. 13

141

B7	B6	B5	B4	Order of bits	B3	B2	B1	B0	Inversion Pattern
0	0	0	0	F/H/E/G,B/D/J/L,A/C/I,K	0	0	0	0	Normal Normal Normal
0	0	0	1	F/H/E/G,A/C/I/K,B/D/J/L	0	0	0	1	Normal Normal Invert
0	0	1	0	A/C/I/K,B/D/J/L,F/H/E/G	0	0	1	0	Normal Invert Normal
0	1	0	0	A/C/I/K,F/H/E/G,B/D/J/L	0	1	0	0	Normal Invert Invert
0	1	0	1	B/D/J/L,F/H/E/G,A/C/I/K	0	1	0	1	Invert Normal Normal
0	1	1	0	B/D/J/L,A/C/I/K,F/H/E/G	0	1	1	0	Invert Normal Invert
1	0	0	0	F/H/E/G,A/C/I/K,B/D/J/L	1	0	0	0	Invert Invert Normal
1	0	0	1	A/C/I/K,F/H/E/G,B/D/J/L	1	0	0	1	Invert Invert Invert
1	0	1	0	B/D/J/L,A/C/I/K,F/H/E/G	1	0	1	0	Invert Invert Invert

FIG. 14

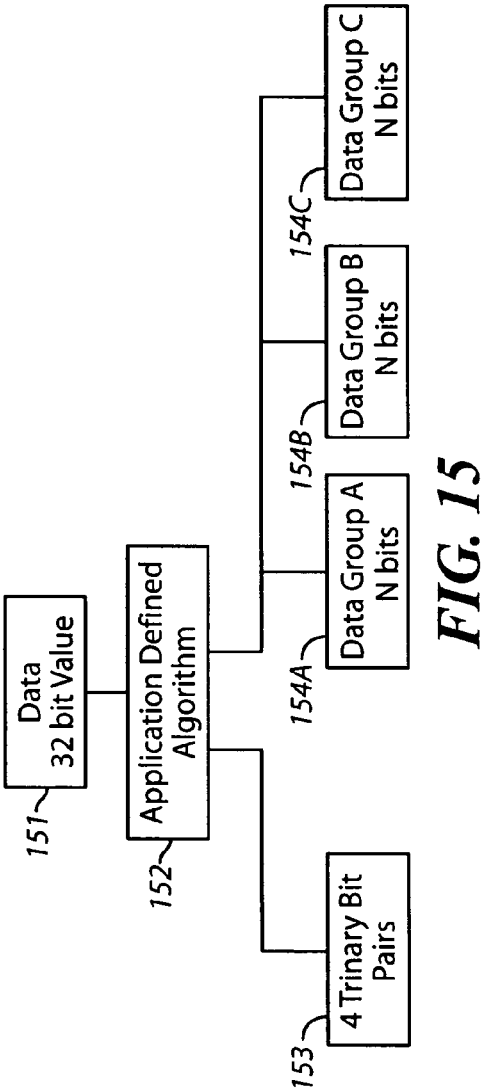
Data
32 bit Value
151
Application Defined
Algorithm
152
4 Trinary Bit
Pairs
153
Data Group A
N bits
154A
Data Group B
N bits
154B
Data Group C
N bits
154C

FIG. 15

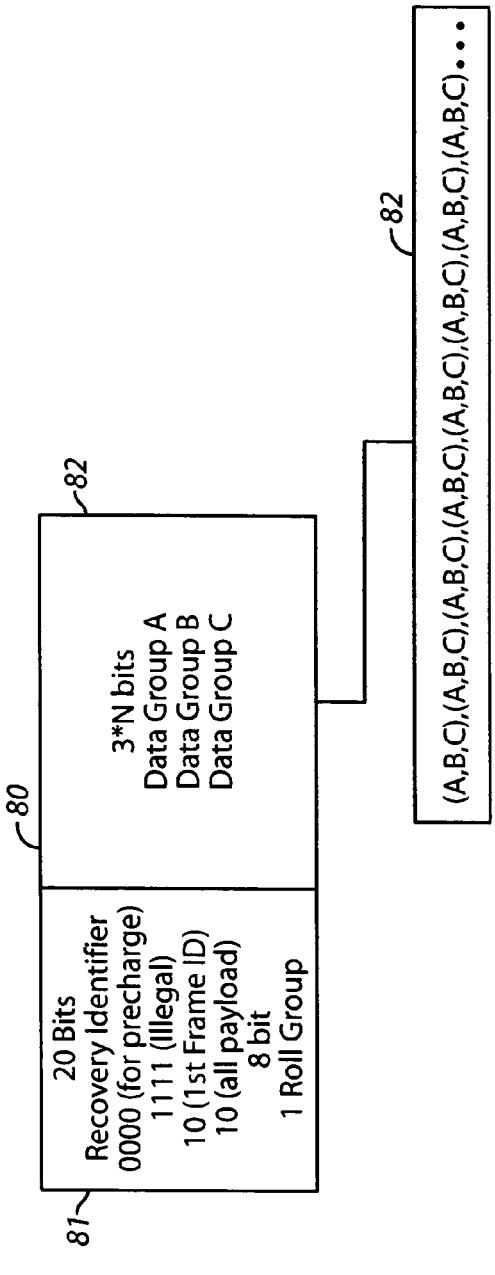
20 Bits
Recovery Identifier
0000 (for precharge)
1111 (Illegal)
10 (1st Frame ID)
10 (all payload)
8 bit
1 Roll Group
81
3*N bits
Data Group A
Data Group B
Data Group C
80
82
(A,B,C),(A,B,C),(A,B,C),(A,B,C),(A,B,C),(A,B,C),(A,B,C)...
82

FIG. 16

171

B7	B6	B5	B4	Order of bits	B3	B2	B1	B0	Inversion Pattern
0	0	0	0	ABC	0	0	0	0	Normal Normal Normal
0	0	0	1	ACB	0	0	0	1	Normal Normal Invert
0	0	1	0	CBA	0	0	1	0	Normal Invert Normal
0	1	0	0	CAB	0	1	0	0	Normal Invert Invert
0	1	0	1	BAC	0	1	0	1	Invert Normal Normal
0	1	1	0	BCA	0	1	1	0	Invert Normal Invert
1	0	0	0	ACB	1	0	0	0	Invert Invert Normal
1	0	0	1	CAB	1	0	0	1	Invert Invert Invert
1	0	1	0	BCA	1	0	1	0	Invert Invert Invert

FIG. 17

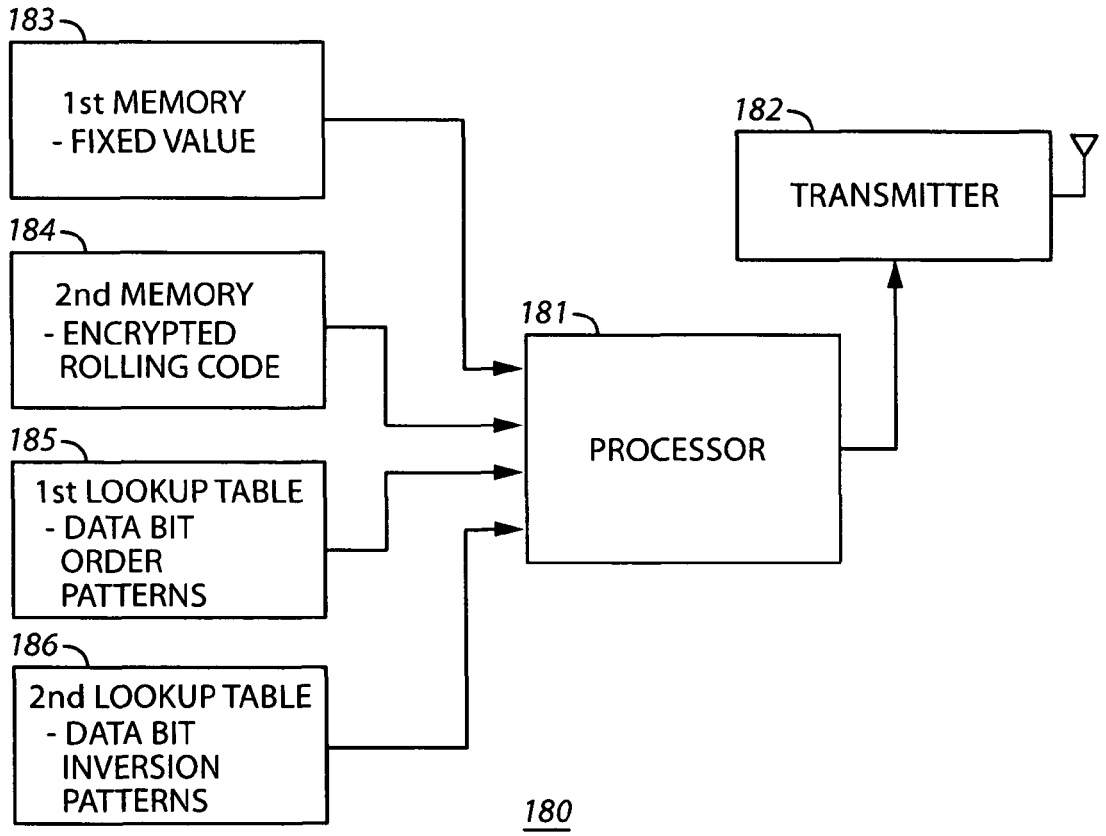

FIG. 18

METHOD AND APPARATUS TO FACILITATE TRANSMISSION OF AN ENCRYPTED ROLLING CODE

Matter enclosed in heavy brackets [ ] appears in the original patent but forms no part of this reissue specification; matter printed in italics indicates the additions made by reissue; a claim printed with strikethrough indicates that the claim was canceled, disclaimed, or held invalid by a prior post-patent action or proceeding.

RELATED APPLICATIONS

This application is *a reissue application of application Ser. No. 11/501,455, filed Aug. 9, 2006, issued on Apr. 16, 2013 as U.S. Pat. No. 8,422,667, which is:*

a continuation in part of application Ser. No. 11/480,288 which was filed on Jun. 30, 2006 as a continuation of application Ser. No. 11/044,411, which is entitled METHOD AND APPARATUS TO FACILITATE TRANSMISSION OF TERNARY MOVABLE BARRIER OPERATOR INFORMATION, which was filed on Jan. 27, 2005, and is now issued as U.S. Pat. No. 7,071,850; and

[This application is] a continuation in part of application Ser. No. 11/172,525 filed Jun. 30, 2005 and entitled METHOD AND APPARATUS TO FACILITATE MESSAGE TRANSMISSION AND RECEPTION USING DIFFERENT TRANSMISSION CHARACTERISTICS the contents of which are fully incorporated herein by this reference.

TECHNICAL FIELD

This invention relates generally to encrypted rolling codes and more particularly to the transmission of encrypted rolling code information.

BACKGROUND

Rolling codes are known in the art. Rolling codes are often used, for example, in conjunction with movable barrier operators of various kinds (with movable barrier operators of various kinds also being known in the art and including operators that effect the selective control and movement of single panel and segmented garage doors, pivoting, rolling, and swinging gates, guard arms, rolling shutters, and various other movable barriers). In such an application setting, a wireless transmitter can send a code to a corresponding movable barrier operator to cause the latter to effect a desired movement or other action with respect to, for example, a corresponding movable barrier.

When using rolling codes, the code transmitted by the wireless transmitter will change (often with each transmission) in accordance with a predetermined plan or algorithm that is also known to the movable barrier operator. Such an approach can foil the use of an intercepted code by an unauthorized party because that intercepted code will not typically again, at least in the near term, be honored by that movable barrier operator should the unauthorized party attempt to themselves transmit that code. Without knowledge of the underlying scheme by which a next code is selected, the unauthorized party who gains access to a presently used code will still remain unable to leverage that knowledge in support of effecting unauthorized control over the movable barrier operator.

There may be instances, however, when additional security may be desired or appropriate. For example, a given rolling code instantiation may be open to brute force attacks or other weaknesses due to local and/or otherwise unique circumstances.

BRIEF DESCRIPTION OF THE DRAWINGS

The above needs are at least partially met through provision of the method and apparatus to facilitate transmission of an encrypted rolling code described in the following detailed description, particularly when studied in conjunction with the drawings, wherein:

FIG. **1** comprises a flow diagram as configured in accordance with various embodiments of the invention;

FIG. **2** comprises a flow diagram as configured in accordance with various embodiments of the invention;

FIG. **3** comprises a depiction of prior art ternary encoding;

FIG. **4** comprises a flow diagram as configured in accordance with various embodiments of the invention;

FIG. **5** comprises a flow diagram as configured in accordance with various embodiments of the invention;

FIG. **6** comprises a mapping table as configured in accordance with various embodiments of the invention;

FIG. **7** comprises a schematic view of bit processing and parsing in accordance with various embodiments of the invention;

FIG. **8** comprises a comprises a schematic joint message diagram as configured in accordance with various embodiments of the invention;

FIG. **9** comprises a schematic view of bit selection and parsing as configured in accordance with various embodiments of the invention;

FIG. **10** comprises an illustrative example of a lookup table as configured in accordance with various embodiments of the invention;

FIG. **11** comprises a schematic view of two joint messages as configured in accordance with various embodiments of the invention;

FIG. **12** comprises a schematic view of bit parsing as configured in accordance with various embodiments of the invention;

FIG. **13** comprises a schematic view of a joint message as configured in accordance with various embodiments of the invention;

FIG. **14** comprises an illustrative example of a lookup table as configured in accordance with various embodiments of the invention;

FIG. **15** comprises a schematic view of bit processing and parsing as configured in accordance with various embodiments of the invention;

FIG. **16** comprises a schematic view of a joint message as configured in accordance with various embodiments of the invention;

FIG. **17** comprises an illustrative example of a lookup table as configured in accordance with various embodiments of the invention; and

FIG. **18** comprises a block diagram as configured in accordance with various embodiments of the invention.

Skilled artisans will appreciate that elements in the figures are illustrated for simplicity and clarity and have not necessarily been drawn to scale. For example, the dimensions and/or relative positioning of some of the elements in the figures may be exaggerated relative to other elements to help to improve understanding of various embodiments of the present invention. Also, common but well-understood elements that are useful or necessary in a commercially feasible

embodiment are often not depicted in order to facilitate a less obstructed view of these various embodiments of the present invention. It will also be understood that the terms and expressions used herein have the ordinary meaning as is accorded to such terms and expressions with respect to their corresponding respective areas of inquiry and study except where specific meanings have otherwise been set forth herein.

DETAILED DESCRIPTION

Generally speaking, pursuant to these various embodiments, an encrypted rolling code, a plurality of differing data bit order patterns, and a plurality of differing data inversion patterns are provided. One selects a particular one of each of the bit order patterns and the data inversion patterns to provide selected patterns and then uses those selected patterns as transmission characteristics when transmitting at least part of the encrypted rolling code.

By these teachings, for example, a wireless remote control transmitter can be provided with data to be transmitted, where that data comprises, at least in part, at least portions of an encrypted rolling code and where that data comports with a particular data bit order pattern and a particular data inversion pattern as a function of a given portion of that rolling code. That data can then be transmitted in combination with the given portion of the encrypted rolling code wherein that given portion of the rolling code is not transmitted with any of its bits reordered or inverted as a function of the given portion itself. Accordingly, a receiver that receives the data can then properly recover the re-ordered/inverted portions of the encrypted rolling code as a function of the given portion of the encrypted rolling code.

By one approach, if desired, the aforementioned data can comprise ternary data that is presented in a binary format. The use of ternary data can aid in facilitating compatible interaction with at least some movable barrier operators while also achieving an encryption effect at the same time as tending to ensure compatible use with binary peripheral platforms and the like. By one approach, this can comprise mapping each trit of the ternary data to a corresponding pair of binary bits. A pair of binary bits can represent 4 discrete information elements and by one approach, three of these discrete information elements can each correspond to one of the three trit states/levels while the fourth discrete information element (which otherwise comprises an illegal value) can serve a synchronization function.

If desired, in addition to the aforementioned encrypted rolling code, a fixed code can also be included in the transmission. By one approach, for example, both the aforementioned part of the encrypted rolling code and this fixed code can be transmitted using the above-described selected patterns as transmission characteristics.

These and other benefits may become clearer upon making a thorough review and study of the following detailed description. Referring now to the drawings, and in particular to FIG. **1**, an illustrative process in this regard provides **11** an encrypted rolling code. As will be illustrated in more detail below, this can comprise, if desired, providing an encrypted rolling code as a plurality of bit pairs as correspond to a ternary data set.

If desired, this process will also optionally accommodate providing **12** a fixed code. This fixed code can vary with the needs, requirements, and/or opportunities of a given application setting, but can, for example, comprise a value that is substantially unique to a given transmitter and hence comprises a value that will serve to identify that given transmitter. Such an approach can be useful, for example, when used in conjunction with a remote control movable barrier operator transmitter.

This process also provides **13** a plurality of differing data bit order patterns. By one approach, for example, this can comprise data bit order patterns that each comprise a pattern for exactly three bits. As will be shown below, this can be particularly beneficial when used in conjunction with bit pairs that correlate to corresponding ternary data. Similarly, this process provides **14** a plurality of different data inversion patterns. As before, if desired, this can comprise providing patterns that each comprise a pattern for exactly three bits. The number of patterns provided in either case can vary as desired. By one approach, however, this can comprise providing at least nine different bit order patterns and nine different data inversion patterns. Illustrative examples in this regard are provided further herein.

This process then provides for selecting **15** a particular one of each of the data bit order patterns and the data inversion patterns to provide resultant corresponding selected patterns. There are various ways by which such selections can be made. By one approach, one may use a predetermined portion of the previously provided encrypted rolling code to inform the making of these selections. For example (and as will be illustrated in more detail herein), this can comprise using a predetermined four bit pairs of the encrypted rolling code as a basis for selecting the particular data bit order pattern and the particular data inversion pattern. As another example in this regard, in combination with the foregoing or in lieu thereof, this can comprise using a first predetermined portion of the encrypted rolling code to select a first particular data bit order pattern and a first data inversion pattern and using a second predetermined portion of the encrypted rolling code (that is, for example, discrete with respect to the first predetermined portion of the encrypted rolling code though this is not a fundamental requirement) to select a second particular data bit order pattern and a second data inversion pattern.

This process then provides for transmitting **16** at least a part of the encrypted rolling code itself (as well as at least a part of the above-described fixed code when present) using the aforementioned selected patterns as transmission characteristics. By one approach this can comprise making such a transmission using Manchester encoding as is known in the art.

So configured, these teachings are readily employed, for example, to facilitate the transmission of a remote control message. This can comprise, for example, providing a fixed message having at least a first part and a second part along with an encrypted rolling code that has a first through a fourth part. The first part of the encrypted rolling code can then be used to select a particular data bit order pattern and a data inversion pattern to use as a set of first selected patterns while the second part of the encrypted rolling code can be used to select a second set of patterns from amongst the available candidate patterns. One can then transmit the first part of the fixed message and the third part of the encrypted rolling code using the first selected patterns as transmission characteristics while transmitting the second part of the fixed message and the fourth art of the encrypted rolling code using the second selected patterns as transmission characteristics.

By one approach, in this illustrative example this can also comprise transmitting the first and second parts of the encrypted rolling code without using either the first or selected patterns as transmission characteristics. So configured, the first and second parts of the encrypted rolling code

are then readily usable as recovery identifiers that can be used by a receiver to recover the first and second parts of the fixed message and the third and fourth parts of the encrypted rolling code.

To illustrate further in this regard, these first and second parts of the encrypted rolling code could each comprise four bit pairs as correspond to the aforementioned ternary data. In such a case, two of the bit pairs as comprise the first part of the encrypted rolling code can be used with a lookup table to correlate those two bit pairs to a corresponding data bit order pattern. In a similar manner the remaining bit pairs can be used with a second lookup table (which may, if desired, actually comprise a part of the first lookup table) to correlate these bit pairs with a corresponding data inversion pattern. In a similar fashion, two of the bit pairs of the four bit pairs as comprise the second part of the encrypted rolling code can be used with that first lookup table to identify another data bit order pattern while the remaining two bit pairs can be used with the second lookup table to identify a corresponding data inversion pattern.

In such a case, the aforementioned transmission can then comprise transmitting the second part of the fixed message and the fourth part of the encrypted rolling code using the second selected patterns as transmission characteristics only after not transmitting for at least a predetermined period of time following transmission of the first part of the fixed message and the third part of the encrypted rolling code using the first selected patterns as transmission characteristics. The duration of this predetermined period of time can vary with the needs and opportunities of a given application setting, but a duration of about 75 milliseconds will suffice for many expected purposes.

In addition to facilitating a transmission of an encrypted rolling code and other content that comprises, for example, information that is unique to a given transmitter (such as a unique identifier for that transmitter), these teachings will further readily accommodate the transmission of additional data that is not substantially unique to the transmitter. This can comprise, for example, providing a data payload (such as a remote control instruction such as OPEN, CLOSE, VACATION MODE, LIGHTS ON, LIGHTS OFF, and so forth) that is not substantially unique to a given transmitter and then transmitting the first part of the fixed message, the third part of the encrypted rolling code, and a first part of this data payload while using the first selected patterns as transmission characteristics and transmitting the second part of the fixed message, the fourth part of the encrypted rolling code, and a second (remaining) portion of the data payload using the second selected patterns as transmission characteristics. When the data payload comprises a relatively large quantity of data as compared to the fixed message and/or the encrypted rolling code, additional portions of the data payload as are not accommodated by the just-described process can then be supplementally transmitted using one of the already selected patterns (or other patterns, if desired) as transmission characteristics.

As another specific illustrative example in this regard, and referring now to FIG. **2**, a wireless remote control transmitter (such as a movable barrier operator remote control) can be configured and arranged to provide **21** data to be transmitted. This data can comprise, at least in part, at least portions of an encrypted rolling code. In any event, this data will comport with a particular data bit order pattern and a particular data inversion pattern as a function of a given portion of the rolling code. By one approach, if desired, this process can further comprise, at least in part, storing **22** this data in a memory prior to transmitting the data. The duration of such storage can vary considerably depending upon the specifics of a given application setting.

This wireless remote control transmitter can then transmit **23** this data in combination with the given portion of the encrypted rolling code such that the given portion of the encrypted rolling code is not transmitted with any of its bits reordered or inverted as a function of the given portion of the encrypted rolling code. So configured, a receiver that receives this data can properly recover the modified portions of the encrypted rolling code as a function, at least in part, of the unmodified given portion of the encrypted rolling code.

As noted above, these teachings are readily applied in a context that makes use of ternary data. It may therefore be helpful to first describe in more detail a typical ternary data protocol as one finds often deployed in conjunction with many movable barrier operators. Pursuant to one approach, pulses of similar amplitude have one of three different durations. For example, and referring now to FIG. **3**, a first pulse **31**, having a shortest duration, can represent the data element "0." A second pulse **32**, having a medium length duration, can represent the data element or state "1." And a third pulse **33**, having a longest duration, can represent the data element or state "2." Such a data mapping protocol serves well to effect a base three-based data exchange. The present teachings can accommodate use and leveraging of a ternary approach to effect relatively secure and compatible communications between a movable barrier operators and corresponding peripheral components of choice. These teachings are also compatible for use with an approach that eschews the specific ternary approach just described.

Referring now to FIG. **4**, in general, these teachings will accommodate a process **40** that itself provides **41** ternary data as corresponds to a movable barrier operator and then converts **42** that ternary data to a binary format to provide resultant binary information. This binary information is then transmitted **43** from one platform to another. As will be shown below, this ternary-to-binary conversion process serves, at least in part, as a kind of encryption process which in turn aids in ensuring the authenticity and accuracy of the information being transmitted.

The ternary data itself can comprise, at least in part, bearer data. More particularly, and referring momentarily to FIG. **5**, pursuant to one (optional) approach, provision of ternary data can comprise prior provision **51** of binary bits comprising information that corresponds to the movable barrier operator (for example, information sourced by, or intended for, a movable barrier operator). Such information can optionally comprise, for example, movable barrier operator fixed information **52** such as identifying information for a particular movable barrier operator, a particular peripheral component, or the like. Such information can also optionally comprise (in addition to or in lieu of fixed information **52**) non-fixed information **53** such as the aforementioned data payload as again corresponds to the movable barrier operator. This non-fixed information **53** can comprise bearer data/information (such as, but not limited to, platform status information, commands, acknowledgments, and so forth). As already noted, this non-fixed information **53** can also comprise varying quantities of data if desired.

These binary bits are then converted **54** into the aforementioned ternary data. This could comprise, in an appropriate platform, a conversion of the binary data into ternary data such as that described above with respect to FIG. **3**. In general, such an approach need not be used. Instead, the

binary data can be converted into a binary-bit-based ternary format (with an illustrative example being provided further below).

By one approach, however, this does not comprise a simple reversal of the binary-to-ternary process just described. Instead, the ternary-to-binary conversion step can comprise mapping each trit of the ternary data to a corresponding pair of binary bits. To illustrate such a map **61**, and referring momentarily to FIG. **6**, the ternary data element "0" (which corresponds to the usual binary data element "0") maps to the binary pair "00." In similar fashion, ternary "1" (which corresponds to usual binary "1") maps to the binary pair "01" and ternary "2" (which corresponds to usual binary "11") maps to the binary pair "01."

This leaves an otherwise unused binary pair "11." Pursuant to a preferred approach, this otherwise illegal value can serve a synchronization function when facilitating communications as between a movable barrier operator and one or more peripheral components when using a binary format that otherwise has no synchronization mechanism built into its format (for example, a stream of binary bits such as:

0110111111101001110111011011111110100111011101101111111010011101110111 which format lacks a frame marker or other point of synchronization). To illustrate, a synchronization signal/marker comprising this "11" binary pair can be used to indicate, for example, the regular end and/or start of a frame or message as in the following example:

1101101111110111101110111101101111111011111101111111011011111111011111 where the bold font "11" regularly spaced binary pairs serve as frame markers (and which, due to their synchronized regular spacing, are readily distinguishable from other "11" pairs as may occur for whatever reason (illustratively depicted in the above example with italic font).

Those skilled in the art will appreciate that this process of converting binary information into ternary information, followed by conversion of that ternary information into corresponding binary pairs, yields, in most cases, a different bit sequence (and even a different number of bits) as compared to the initial binary information. This difference serves, at least in part, as a non-key-based encryption technique and hence provides a way of effecting the provision of an encrypted rolling code.

Referring now to FIG. **7**, a more detailed illustrative embodiment will be presented. In this first illustrative example, the only substantive content to be associated and transmitted with a 28 bit rolling code **71** comprises a 40 bit value that represents fixed information **72**. This fixed information **72** may serve, for example, to uniquely identify the transmitter that will ultimately transmit this information as noted above.

In this particular illustrative embodiment, the bits comprising the rolling code **71** are encrypted **73** by mirroring the bits and then translating those mirrored bits into ternary values as suggested above to provide corresponding bit pairs (in this example, this would comprise 18 such bit pairs) to thereby provide a resultant encrypted rolling code **74**. This mirroring can be applied to specific groupings of bits in the rolling code creating mirrored groups or can involve the entire value. In this illustrative example, the encrypted rolling code **74** is presented for further processing as four groups. In this example, these four groups comprise a roll group E **74**A comprised of four binary bit pairs, a roll group F **74**B comprised of five binary bit pairs, a roll group G **74**C comprised of four binary bit pairs, and a roll group H **74**D comprised of five binary bit pairs.

The 40 bit fixed information **72** is subdivided in a similar manner albeit sans encryption. This comprises, in this particular illustrative approach, forming four subgroups comprising a fixed group A **75**A, a fixed group B **75**B, a fixed group C **75**C, and a fixed group D **75**D, wherein each such group is comprised of 10 bits of the original 40 bit value.

These variously partitioned data groups can then be used as shown in FIG. **8** to effect a desired transmission. In this example, one or more joint messages **80** provide a primary vehicle by which to communicate the desired information (which includes both the encrypted rolling code and fixed information data as modified as a function of a given portion of the encrypted rolling code along with a recovery identifier that represents that given portion of the encrypted rolling code). This joint message **80** comprises, generally speaking, a first 20 bit portion **81** and a second 30 bit portion **82**.

The first portion **81** comprises, in this embodiment, the following fields:

"0000"—these bits **81**A serve to precharge the decoding process and effectively establish an operational threshold;

"1111"—these bits **81**B comprise two bit pairs that present the illegal state "11" ("illegal" because this corresponds to a fourth unassigned state in the ternary context of these communications) and serve here as a basis for facilitating synchronization with a receiving platform;

"00"—this bit pair **81**C identifies a type of payload being borne by the joint message (in this embodiment, "00" corresponds to no payload other than the fixed identifying information for the transmitter itself, "01" corresponds to a supplemental data payload, and "10" corresponds to a supplemental data-only payload—further explanation regarding these payload types appears further below);

"Xx"—this bit pair **81**D presents a frame identifier that can be used by a receiver to determine whether all required joint messages **80** have been received and which can also be used to facilitate proper reconstruction of the transmitted data;

"B**3**, B**2**, B**1**, B**0**"—these two bit pairs **81**E comprise an inversion pattern recovery identifier and are selected from the bits that comprise the encrypted rolling code **74** described above;

"B**7**, B**6**, B**5**, B**4**"—these two bit pairs **81**F comprise a bit order pattern recovery identifier and are also selected from the bits that comprise the encrypted rolling code **74** described above.

There are various ways by which these recover identifier values can be selected. Referring momentarily to FIG. **9**, by one approach, eight bits from the encrypted roll group **74** are selected to form a corresponding roll sub-group **91**. These might comprise, for example, the first or the last eight bits of the encrypted roll group **74** (in a forward or reversed order). These might also comprise, for example, any eight consecutive bits beginning with any pre-selected bit position (such as, to illustrate, the seventh bit, the 21st bit, and so forth). Other possibilities also exist. For example, only even position bits or odd position bits could serve in this regard. It would also be possible, for example, to use preselected bits as comprise one or more of the previously described roll group sub-groups such as roll group E **74**A or roll group G **74**C.

It would also be possible to vary the selection mechanism from, for example, joint message to joint message. By one simple approach in this regard, for example, the first eight bits of the encrypted roll group **74** could be used to form the

roll sub-group **91** with the last eight bits of the encrypted roll group **74** being used in a similar fashion in an alternating manner.

The eight bits that comprise this roll sub-group **91** are then further parsed to form the two recovery indicators **81**E and **81**F mentioned above. Again, there are numerous ways by which one may use the bits that comprise the roll sub-group **91** to form these recovery indicators **81**E and **81**F. By one simple approach, for example, the bits as comprise the roll sub-group **91** can be used in their existing (or reversed) order to form roll group **1 81**E and roll group **2 81**F. Using this approach, for example, bit B**3** of roll group **1 81**E would comprise bit seven from the roll sub-group **91** with bit B**2** then corresponding to bit six and so forth.

By another approach, if desired, every other bit can be applied in this manner. So configured, for example, bit B**3** could comprise bit six from the roll sub-group **91**, bit B**2** could comprise bit four from the roll sub-group **91**, and so forth. In such a case, bit B**7** would then comprise bit seven from the roll sub-group **91**, bit B**6** would comprise bit five from the roll sub-group **91**, and so forth.

Referring again to FIG. **8**, in this embodiment, the "B**7**, B**6**, B**5**, B**4**" values from the corresponding recovery indicator are used in conjunction with one or more lookup tables to determine a data bit order pattern to use with respect to formatting the data as comprises the second portion **82** of the joint message **80**. Similarly, the "B**3**, B**2**, B**1**, B**0**" values are used in conjunction with a lookup table to determine a data bit order pattern to also use with that second portion **82** of the joint message **80**.

Before providing further elaboration regarding an illustrative example of such lookup tables and their use, it will be helpful to first note that, in this example, the data in the second portion **82** of the joint message comprises 10 bits from roll group F (or H) and 10 bits each from fixed group A (or C) and fixed group B (or D) for a total of 30 bits. These bits are organized into triplets (shown in FIG. **8** in the form "(F, B, A)" and "(H, D, C)" to indicate that each such triplet includes one bit from a roll group F or H and one bit each from the two fixed groups B and A or D and C.

Those skilled in the art will note that, in this illustrative example, bits from roll group E **74**A and roll group G **74**C are not present in the second portion **82** of the joint message **80**. This is because, in this example, it is presumed that the contents of these two roll groups are used to form the recovery indicators that appear in the first portion **81** of the joint message **80**. Other accommodations can of course be made in this regard. In general, however, these teachings will accommodate not including those encrypted rolling code bits that are used as recovery indicators in the second portion **82** of the joint message **80**.

In the example shown, the order of the bits in each triplet is "F, B, A" (or "H, D, C" as appropriate). This order is neither arbitrary nor static. Instead, for this particular joint message **80**, this order of the bits in each triplet is dictated by the values B**7**, B**6**, B**5**, B**4** noted above. In this case, and referring now to FIG. **10**, a lookup table **101** serves to correlate various values for these two bit pairs with corresponding data bit order patterns. In this example, presuming that the values of these four bits happens to be "0000," the corresponding order of bits for each triplet is established as "F/H, B/D, A/C" and hence the ordering of the bits depicted in FIG. **8**.

Those skilled in the art will note that this lookup table **101** provides no patterns that would correlate to two bit pairs having the value "11." This is because, in this embodiment, "11" as a bit pair value comprises an illegal value and hence is not expected to occur. Accordingly there are no bit order patterns presented to correlate with such values as "11XX," "XX11," or "1111." This creates 9 possible selections for the order of bits and the inversion value. The number of possible unique order of three bits leads to only six different bit order patterns. This degree of diversity should suffice for most if not all purposes.

The aforementioned B**3**, B**2**, B**1**, B**0** values **81**F are employed in a similar fashion with this lookup table **101** to identify a particular inversion pattern to be employed with the data triplets of the second portion **82** of the joint message **80**. For example, when these bits are "0000," this lookup table provides for no inversion of any of the bits in each triplet. On the other hand, when these bits are "1010," each bit of each triplet is to be inverted. In this case, up to eight different inversion patterns are possible.

To illustrate further, when a given data triplet happens to have the values "110" and the inversion indicator has the values "0100," the lookup table will return a data inversion pattern of "normal invert invert." As a result, this particular data triplet will instead have the values "101" because the second and third values in each triplet are now to be inverted in value.

So configured, a first portion of a joint message is seen to include a recovery indicator that itself comprises a selected portion of an encrypted rolling code. A second portion of that joint message, in turn, contains data triplets having bits that are arranged in a particular order and that observe a particular inversion pattern as a function of that joint indicator. Accordingly, it will not be sufficient for an unauthorized party to simply glean, in some fashion, the basis of the rolling code itself. Instead, now, this unauthorized party must also now understand how a particular portion of that rolling code is used to modify the transmission of other portions of that rolling code in addition to fixed information as may also accompany the rolling code.

In many application settings it may be desirable to present more than one such joint message to present a complete transmission. For example, and referring now to FIG. **11**, it may be desirable to use two (or more) such joint messages **80**A and **80**B in order to present the complete rolling code and the complete fixed content and was described above. In such a case, for example, the first joint message **80**A can present and use a first roll sub-group **91** as defined above as a recovery identifier (which comprises, in this illustrative example, roll group E **74**A) while the second joint message **80**B presents and uses a second, different roll sub-group B **91** (which comprises, in this illustrative example, roll group G **74**C) for this purpose. These recovery identifiers can be used as just described to control modification of their corresponding data. So configured, in this illustrative example, 10 bits of roll group F **74**B, 10 bits of fixed group A **75**A, and 10 bits of fixed group B **75**B have their bits ordered and inverted as a function of the bits of roll group E **74**A while 10 bits of roll group H **74**D, 10 bits of fixed group C **75**C, and 10 bits of fixed group D **75**D are similarly ordered/inverted as a function of the bits of roll group G **74**C.

If desired, these joint messages **80**A and **80**B can be sent in a concatenated manner. By another approach, however, these joint messages can be separated by at least a minimal amount of silence (achieved, for example, by not transmitting during this period of time). For example, 75 milliseconds or so of blank time can be used for this purpose. So configured, a receiver that receives a second joint message

prior to this period of blank time expiring can conclude that one or both of the received messages is somehow in error and should be avoided.

As noted above, in some cases it may be useful to transmit an additional amount of data or information than that specifically provided above. For example, it may be useful to transmit additional data that represents a particular instruction, status information, or the like. Such additional information can be readily accommodated by the teachings set forth above. To illustrate, and referring now to FIG. **12**, 32 bits of such additional data can be subdivided into four corresponding data groups I and J **122**A and **122**B and K and L **122**C and **122**D where each such data group has eight bits.

Referring now to FIG. **13**, the second portion **82** of each joint message **80** can now comprise 54 bits. By one approach, this can comprise 8 bits for a repeated presentation of the same rolling code group E or G as comprises the recovery identifier, 10 bits each for rolling code group F or H, fixed group A or C, and fixed group B or D, as well as 8 bits each for data group I or K and data group J or L as are described above. These various bits are again combined into data triplets using a group selection pattern such as that illustrated in FIG. **13**. And, once again, the recovery identifier comprised of the roll group presented in the first portion **81** of the joint message **80** is used to select from a lookup table(s) the particular bit order and inversion patterns to employ with respect to these data triplets. In this case, and referring now to FIG. **14**, the lookup table **141** can include specific bit order patterns that apply in different ways depending upon whether the data triplet includes the supplemental data.

In some cases, it may be necessary or appropriate to transmit even a larger quantity of data than can be accommodated by the processes and techniques described above. In such a case, if desired, additional supplemental joint messages can be used to present such supplemental data. With reference to FIG. **15**, 32 bit value data elements **151** can be parsed using an application defined algorithm **152** of choice as corresponds to the data itself (or as may be otherwise provided or selected) into four ternary bit pairs **153** and three data groups of N bits each **154**A-**154**C.

Referring now to FIG. **16**, the recovery indicator can be reused from a previous related joint message and the second portion **82** of the joint message **80** can contain 3 to the Nth power bits as necessary to accommodate the full data payload. The three data groups A-C are then used to form corresponding data triplets. And, as before, the recovery identifier is used to extract from a corresponding lookup table (such as the lookup table **171** presented in FIG. **17**) the particular bit order pattern and bit inversion pattern to employ with respect to the transmission of these data triplets.

Those skilled in the art will appreciate that the above-described processes are readily enabled using any of a wide variety of available and/or readily configured platforms, including partially or wholly programmable platforms as are known in the art or dedicated purpose platforms as may be desired for some applications. Referring now to FIG. **18**, an illustrative approach to such a platform will now be provided.

In this illustrative embodiment, the apparatus **180** (which may comprise, for example, a wireless remote control transmitter) comprises a processor **181** that couples to a transmitter **182** (such as a wireless transmitter) of choice. Both of these components then also operably couple to a first memory **183**, a second memory **184**, a first lookup table **185**, and a second lookup table **186**. The first memory **183** can have a fixed value stored therein. This fixed value can comprise, for example, information that substantially uniquely identifies this particular apparatus **180**. This first memory **183** may also, if desired, have a plurality of different fixed values contained therein. This would permit storing, for example, remote control signals that are not specific (i.e., unique) to the apparatus **180** itself.

The second memory **184** can have the aforementioned encrypted rolling code stored therein. By one approach, the processor **181** is configured and arranged to calculate the encrypted rolling code when needed and to temporarily buffer that value in the second memory **184** pending actual use of that information. By another approach, the encrypted rolling code information can be pre-provisioned using a derivation and storage approach of choice.

The lookup tables **185** and **186** are the lookup tables described above. For example, the first lookup table **185** can comprise the lookup table that correlates a first plurality of different encrypted rolling code values with corresponding differing data bit order patterns. Similarly, the second lookup table **186** can comprise the lookup table that correlates a second plurality of different encrypted rolling code values with corresponding different data inversion patterns.

The processor **181** itself is configured and arranged (via, for example, appropriate programming) to carry out selected teachings as have been presented above. So configured, for example, the processor **181** can be configured and arranged to use the encrypted rolling code to select ones of the particular data bit order patterns and data inversion patterns for the transmitter **182** to use as transmission characteristics when transmitting the fixed value and at least portions of the encrypted rolling code. In particular, if desired, the processor can use a first part of the encrypted rolling code to select a data bit order pattern and a data inversion pattern to use when transmitting a first part of the encrypted rolling code and the fixed value and a second, different part of the encrypted rolling code to select a data bit order pattern and a data inversion pattern to use when transmitting a second, different part of the encrypted rolling code and the fixed value.

Those skilled in the art will recognize and understand that such an apparatus **180** may be comprised of a plurality of physically distinct elements as is suggested by the illustration shown in FIG. **18**. It is also possible, however, to view this illustration as comprising a logical view, in which case one or more of these elements can be enabled and realized via a shared platform and/or a more-widely-distributed platform. It will also be understood that such a shared platform may comprise a wholly or at least partially programmable platform as are known in the art.

So configured, those skilled in the art will recognize and appreciate that these teachings offer great flexibility and opportunity with respect to further protecting information during a wireless transmission of that information. These teachings have particular relevance to transmissions of rolling codes and offer particular advantages when also used in conjunction with the transmission of fixed information in addition to rolling code information. The particular transmission characteristics presented are largely compatible for use with a wide variety of wireless modulation techniques. Those skilled in the art will also appreciate that these teachings are highly compatible for use with binary-based representations of ternary data formats.

Those skilled in the art will recognize that a wide variety of modifications, alterations, and combinations can be made with respect to the above described embodiments without departing from the spirit and scope of the invention, and that

such modifications, alterations, and combinations are to be viewed as being within the ambit of the inventive concept.

We claim:

1. A method comprising:

providing an encrypted rolling code;

providing a plurality of differing data bit order patterns;

providing a plurality of differing data inversion patterns;

selecting a particular one of each of the data bit order patterns and the data inversion patterns to provide selected patterns;

transmitting at least a part of the encrypted rolling code using the selected patterns as transmission characteristics,

wherein selecting a particular one of each of the data bit order patterns and the data inversion patterns to provide selected patterns comprises using the rolling code to select the particular data bit order pattern and data inversion pattern to provide the selected patterns.

2. The method of claim **1** wherein the encrypted rolling code comprises a plurality of bit pairs.

3. The method of claim **1** wherein the differing data bit order patterns each comprise a pattern for exactly three bits.

4. The method of claim **1** wherein the differing data inversion patterns each comprise a pattern for exactly three bits.

5. The method of claim **1** wherein:

providing a plurality of differing data bit order patterns comprises providing at least six different bit order patterns; and

providing a plurality of differing data inversion patterns comprises providing at least eight different data inversion patterns.

6. The method of claim **1** wherein using the encrypted rolling code to select the particular data bit order pattern and data inversion pattern to provide the selected patterns comprises using a predetermined portion of the encrypted rolling code to select the particular data bit order pattern and data inversion pattern to provide the selected patterns.

7. The method of claim **6** wherein using a predetermined portion of the encrypted rolling code to select the particular data bit order pattern and data inversion pattern to provide the selected patterns comprises using a predetermined four bit pairs of the encrypted rolling code to select the particular data bit order pattern and data inversion pattern to provide the selected patterns.

8. The method of claim **6** wherein using a predetermined portion of the encrypted rolling code to select the particular data bit order pattern and data inversion pattern to provide the selected patterns further comprises:

using a first predetermined portion of the encrypted rolling code to select a first particular data bit order pattern and a first data inversion pattern to provide first selected patterns; and

using a second predetermined portion of the encrypted rolling code to select a second particular data bit order pattern and a second data inversion pattern to provide second selected patterns;

wherein the first and second predetermined portions of the encrypted rolling code are discrete from one another.

9. The method of claim **1** further comprising:

providing a fixed code;

and wherein transmitting at least a part of the encrypted rolling code using the selected patterns as transmission characteristics further comprises transmitting at least a part of the encrypted rolling code and the fixed code using the selected patterns as transmission characteristics.

10. A method to facilitate transmitting a remote control message comprising:

providing a fixed message having at least a first and second part;

providing an encrypted rolling code having at least a first, second, third, and fourth part;

providing a plurality of differing data bit order patterns;

providing a plurality of differing data inversion patterns;

using the first part of the encrypted rolling code to select a particular one of each of the data bit order patterns and the data inversion patterns to provide first selected patterns;

using the second part of the encrypted rolling code to select a particular one of each of the data bit order patterns and the data inversion patterns to provide second selected patterns;

transmitting:

the first part of the fixed message and the third part of the encrypted rolling code using the first selected patterns as transmission characteristics; the second part of the fixed message and the fourth part of the encrypted rolling code using the second selected patterns as transmission characteristics.

11. The method of claim **10** wherein transmitting further comprises:

transmitting the first and second parts of the encrypted rolling code without using either the first or second selected patterns as transmission characteristics to thereby provide recovery identifiers to be used when recovering at a receiver the first and second parts of the fixed message and the third and fourth parts of the encrypted rolling code.

12. The method of claim **11** wherein the first and second parts of the encrypted rolling code each comprise four bit pairs.

13. The method of claim **12** wherein

using the first part of the encrypted rolling code to select a particular one of each of the data bit order patterns and the data inversion patterns to provide first selected patterns comprises using two bit pairs of the four bit pairs as comprise the first part of the encrypted rolling code and a first lookup table to correlate the two bit pairs to a corresponding data bit order pattern and using a different two bit pairs of the four bit pairs as comprise the first part of the encrypted rolling code and a second lookup table to correlate the different two bit pairs to a corresponding data inversion pattern;

using the second part of the encrypted rolling code to select a particular one of each of the data bit order patterns and the data inversion patterns to provide second selected patterns comprises using two bit pairs of the four bit pairs as comprise the second part of the encrypted rolling code and the first lookup table to correlate the two bit pairs to a corresponding data bit order pattern and using a different two bit pairs of the four bit pairs as comprise the second part of the encrypted rolling code and the second lookup table to correlate the different two bit pairs to a corresponding data inversion pattern.

14. The method of claim **13** wherein transmitting comprises transmitting using Manchester encoding.

15. The method of claim **14** wherein transmitting further comprises:

transmitting the second part of the fixed message and the fourth part of the encrypted rolling code using the second selected patterns as transmission characteristics only after not transmitting for at least a predetermined

period of time following transmission of the first part of the fixed message and the third part of the encrypted rolling code using the first selected patterns as transmission characteristics.

16. The method of claim **15** wherein the predetermined period of time comprises about 75 milliseconds.

17. The method of claim **10** wherein the fixed message comprises a value that is substantially unique to a given transmitter and therefore serves to identify the given transmitter.

18. The method of claim **17** further comprising:

providing a data payload that is not substantially unique to

the given transmitter; and wherein transmitting:

the first part of the fixed message and the third part of the encrypted rolling code using the first selected patterns as transmission characteristics;

the second part of the fixed message and the fourth part of the encrypted rolling code using the second selected patterns as transmission characteristics; further comprises:

transmitting:

the first part of the fixed message, the third part of the encrypted rolling code, and a first part of the data payload using the first selected patterns as transmission characteristics;

the second part of the fixed message, the fourth part of the encrypted rolling code, and a second part of the data payload using the second selected patterns as transmission characteristics.

19. The method of claim **18** wherein the data payload comprises a movable barrier operator remote control signal.

20. The method of claim **19** wherein transmitting further comprises transmitting a remaining part of the data payload using one of the selected patterns as transmission characteristics.

21. An apparatus comprising:

a first memory having a fixed value stored therein;

a second memory having an encrypted rolling code stored therein;

a first lookup table that correlates a first plurality of different encrypted rolling code values with corresponding differing data bit order patterns;

a second lookup table that correlates a second plurality of different encrypted rolling code values with corresponding differing data inversion patterns;

a processor that is operably coupled to the first and second memory and the first and second lookup table and that is configured and arranged to use the encrypted rolling code to select ones of the particular data bit order patterns and data inversion patterns to provide selected patterns;

a transmitter operably coupled to the first and second memory and to the processor and being configured and arranged to transmit at least a part of the encrypted rolling code and the fixed value using the selected patterns as transmission characteristics.

22. The apparatus of claim **21** wherein the apparatus comprises a movable barrier operator wireless remote control.

23. The apparatus of claim **21** wherein the processor is further configured and arranged to use:

a first part of the encrypted rolling code to select a data bit order pattern and a data inversion pattern to use when transmitting a first part of the encrypted rolling code and the fixed value; and

a second, different part of the encrypted rolling code to select a data bit order pattern and a data inversion pattern to use when transmitting a second, different part of the encrypted rolling code and the fixed value.

24. The apparatus of claim **21** wherein the fixed value comprises at least one of:

a substantially unique identifier for the apparatus;

a remote control signal that is not specific to the apparatus.

25. The apparatus of claim **24** wherein the fixed value comprises both of the substantially unique identifier for the apparatus and the remote control signal that is not specific to the apparatus.

26. A method for use with a receiver that is configured and arranged to compatibly receive and process a transmitted encrypted rolling code, wherein:

the transmitted encrypted rolling code comprises at least a part thereof that was transmitted using selected patterns of transmission characteristics selected [based at least in part on] *using* a rolling code, wherein a first one of the selected patterns comprises a selected particular one of a plurality of differing data bit order patterns and wherein a second one of the selected patterns comprises a selected particular one of a plurality of differing data inversion patterns;

the method comprising:

at a transmitter:

providing a message that will be compatibly received and processed by the receiver as the transmitted encrypted rolling code;

transmitting the message to the receiver.

27. The method of claim **26** wherein providing a message comprises providing a message that comprises, at least in part, a representation of the selected patterns of transmission characteristics.

28. The method of claim **26** wherein transmitting the message to the receiver comprises transmitting the message to the receiver via a wireless connection.

29. The method of claim 1 wherein the providing the encrypted rolling code comprises:

providing ternary data as corresponds to a movable barrier operator;

converting the ternary data to a binary format to provide binary information as at least part of the encrypted rolling code.

30. The method of claim 29 wherein the providing the ternary data comprises providing binary bits of information and converting the binary bits into the ternary data in a way not mirroring the converting the ternary data to the binary format to provide binary information.

31. The method of claim 10 wherein the providing the encrypted rolling code comprises:

providing ternary data as corresponds to a movable barrier operator;

converting the ternary data to a binary format to provide binary information as at least part of the encrypted rolling code.

32. The method of claim 31 wherein the providing the ternary data comprises providing binary bits of information and converting the binary bits into the ternary data in a way not mirroring the converting the ternary data to the binary format to provide binary information.

33. The method of claim 26 further comprising providing the transmitted encrypted rolling code by:

providing ternary data as corresponds to a movable barrier operator;

converting the ternary data to a binary format to provide binary information as at least part of the encrypted rolling code.

34. The method of claim 33 wherein the providing the ternary data comprises providing binary bits of information and converting the binary bits into the ternary data in a way not mirroring the converting the ternary data to the binary format to provide binary information.

* * * * *