(19) Europäisches Patentamt
European Patent Office
Office européen des brevets

(11) **EP 1 048 471 B1**

(12) **EUROPEAN PATENT SPECIFICATION**

(45) Date of publication and mention of the grant of the patent:
17.12.2008 Bulletin 2008/51

(51) Int Cl.:
B41J 2/21 *(2006.01)* ***B41J 19/14*** *(2006.01)*

(21) Application number: **00303081.4**

(22) Date of filing: **12.04.2000**

(54) **Method and apparatus for minimizing color hue shifts in bi-directional inkjet printing**

Verfahren und Apparat zur Minimierung von Farbtonverschiebungen in bidirektionalem Tintenstrahldruck

Méthode et appareil pour minimiser les écarts de teinte chromatique pour l'impression à jet d'encre bidirectionnelle

(84) Designated Contracting States:
DE FR GB

(30) Priority: **30.04.1999 US 302860**

(43) Date of publication of application:
02.11.2000 Bulletin 2000/44

(73) Proprietor: **Hewlett-Packard Company (a Delaware Corporation)**
Palo ALto CA 94304 (US)

(72) Inventors:
- **Ross, George C.**
  Philomath, OR 97370 (US)
- **Wetchler, David M.**
  Vancouver, WA 98684 (US)
- **Skene, John M.**
  Lake Oswego, OR 97035 (US)

(74) Representative: **Carpmaels & Ransford**
43-45 Bloomsbury Square
London WC1A 2RA (GB)

(56) References cited:
US-A- 4 528 576 **US-A- 4 593 295**

- **PATENT ABSTRACTS OF JAPAN vol. 015, no. 186 (M-1112), 14 May 1991 (1991-05-14) & JP 03 045351 A (MATSUSHITA ELECTRIC IND CO LTD), 26 February 1991 (1991-02-26)**
- **PATENT ABSTRACTS OF JAPAN vol. 1997, no. 03, 31 March 1997 (1997-03-31) & JP 08 295034 A (CANON INC), 12 November 1996 (1996-11-12)**
- **PATENT ABSTRACTS OF JAPAN vol. 1995, no. 11, 26 December 1995 (1995-12-26) & JP 07 195715 A (KATSURAGAWA ELECTRIC CO LTD), 1 August 1995 (1995-08-01)**

Note: Within nine months of the publication of the mention of the grant of the European patent in the European Patent Bulletin, any person may give notice to the European Patent Office of opposition to that patent, in accordance with the Implementing Regulations. Notice of opposition shall not be deemed to have been filed until the opposition fee has been paid. (Art. 99(1) European Patent Convention).

EP 1 048 471 B1

Description

Cross Reference to Related Applications

[0001] The present disclosure may contain subject matter related to U.S. Patent Application Serial Number (unknown), Attorney Docket Number 10990240, titled "Method of Minimizing Color Hue Shifts in a Single-pass, Bi-directional Inkjet Printer using Direction Dependent Color Maps" filed on even date herewith.

Field of the Invention

[0002] This invention relates to color printing, and more particularly to minimizing color hue shift in bi-directional color inkjet printing.

Background of the Invention

[0003] The art of inkjet printing technology is relatively well developed. Commercial products such as computer printers, graphics plotters, copiers, and facsimile machines employ inkjet technology for producing hard copy printed output. The basics of this technology are disclosed, for example, in various articles in the Hewlett-Packard Journal, Vol. 36, No. 5 (May 1985), Vol. 39, No. 4 (August 1988) Vol. 39, No. 5 (October 1988), Vol. 43, No. 4 (August 1992), Vol. 43, No. 6 (December 1992) and Vol. 45 No. 1 (February 1994) editions. Inkjet devices are also described by W.J. Lloyd and H.T. Taub in Output Hardcopy Devices, chapter 13 (Ed. R.C. Durbeck and S. Sherr, Academic Press, San Diego, 1988).

[0004] With the increased popularity of inkjet printing comes the increased competition between manufacturers of inkjet printers. Currently, the most common distinguishing features between competitive inkjet printers are price, speed, and print quality. Today, most inkjet printer manufacturers sell a model of printer in each price range of inkjet printers ranging from low cost home and office printers to high-speed commercial printers. To be competitive within each price range, the printer manufacturer must supply a printer with a faster print speed and a better resultant print quality than his competitors'. With price at a consistent low among the competitive inkjet printer manufacturers, a fast print speed directly coupled to a superior resultant print quality is key to the consumer's selection.

[0005] The fastest way to print a contiguous area of color with a scanning inkjet printhead is to sweep the printhead across the media in a first direction while firing ink droplets as needed from an array of nozzles, advance the media the height of the array of nozzles then sweep the printhead in a second, opposite direction firing ink droplets as before. This is known as single-pass, bi-directional printing. Single-pass because the printhead passes over each area of the page only one time. There is minimal or no overlap between adjacent printed rows. Bi-directional because drops are fired while the printhead is travelling in both the left to right direction and the returning right to left direction.

[0006] This technique is well known and successful for printing in monochrome. Workers skilled in this field have recognized, however, that for printing in color a hue shift, or more precisely a color hue shift, arises between printing left to right over right to left.

[0007] The reason for this color hue shift is that printheads are traditionally arranged, physically, on their carriage in a specific sequence. Therefore, if two or more of the printheads fire while the carriage is moving in one particular direction, the different ink colors are laid down one on top of another in a corresponding order. While the carriage is moving in the opposite direction, in the opposite order. When printing a color that requires the combination of colors from more than one printhead, even though the combination of colors is the same in either direction of printing, the order of deposition can change the visible color hue of the combined color.

[0008] The ordering of the dot placement of two superimposed droplets has a significant influence on the resulting perceived color. For example, laying down magenta on top of cyan may produce a blue which is biased toward the cyan; whereas printing cyan on top of magenta may yield a blue which emphasizes magenta. In successive separate swaths or separately visible color bands, sub-swaths are printed while the printhead is thus traveling in each of two directions, respectively, the successive swaths or sub-swaths. Banding that results is often very conspicuous.

[0009] Current inkjet printers minimize color hue shifts in one or both of two ways:

1) Unidirectional printing. This entails firing droplets of ink when the printheads are moving in a single direction and no firing when printheads are returned in the opposite direction. With this method, the order in which the color primaries (typically Cyan, Magenta, and Yellow) are printed remains constant and no directional related color hue shifts occur; and

2) Multi-pass printing. With multi-pass printing, the printheads pass over the same area of the media more than once in an effort to blend the ordering of the overlaid droplets of ink to diminish the bi-directional color hue shifts by averaging the order in which the color primaries are printed.

[0010] Both methods are effective at reducing or eliminating color hue shifts, thereby improving the print quality, but they also slow the printing process significantly. The consumer will have to compromise print speed to get the desired color print quality.

[0011] To solve this problem, the desired inkjet printer must be able to print bi-directionally, so there is no time wasted on a carriage return; print in a single-pass mode, so there is no time wasted on overlapping printing; and the deposition of ink droplets to form composite colors must be performed in the same sequence whether tra-

versing in a right to left direction or a left to right direction, thereby eliminating the directional related color hue shifts.

[0012] With the increasing use of inkjet printers for high quality color printing in the home and in the office, it is desirable for the consumer to be able to achieve the highest quality color inkjet printing within their selected price range without having to compromise printing speed.

[0013] JP 03045351 discloses a color printer comprising two delivery head groups, elements of which are interspersed with each other. In forward printing the order of delivering colors is A, B, C, D. After the completion of forward printing, recording paper is fed such that the printhead overlays an unprinted surface of the printhead. Reverse printing then occurs. In reverse printing, the order of delivering colors is A, B, C, D. To achieve this, only a first group of delivery heads is used in forward printing and only a second is used in reverse printing.

[0014] US 4,593,295 discloses a method of laying down ink drops on media in which composite dots of a first hue are printed in one dot line of a swath, and composite dots of a second hue are printed on an adjacent dot line of a swath.

[0015] JP 08295034 discloses a recording head arranged such that the emitting order of inks is not changed between the forward and backward passages of a carriage.

SUMMARY OF THE INVENTION

[0016] In accordance with the invention, there is provided a printer as claimed in claim 1 hereinafter and a method as claimed in claim 2 hereinafter.

Brief Description of the Drawings

[0017]

FIG. 1 is an isometric view of an inkjet printer of the preferred embodiment of the invention.

FIG. 2 is an isometric view of an inkjet print cartridge for the printer of FIG. 1 according to one embodiment of the present invention.

FIG. 3 is a plan view of the front surface of the flexible inkjet printhead circuit of FIG. 2 removed from the print cartridge and layed flat.

FIG. 4 depicts a inkjet printhead and ink supply configuration for the printer of FIG. 1.

FIG. 5A depicts a four-nozzle high section across a width of the four inkjet printheads of FIG. 4 illustrating the arrangement and colors of ink droplets emerging from the rows of nozzles of each inkjet print cartridge.

FIG. 5B depicts composite ink droplet deposition on a portion of media deposited in a left to right pass and a portion of media deposited in a right to left pass of overlaid ink droplets created with the nozzle row configuration illustrated in FIG. 5A.

FIG. 6 depicts the inkjet print cartridges, ink supplies and the fluidic conduit interconnects of the preferred embodiment of the present invention.

FIG. 7A depicts a four-nozzle high section across a width of the four inkjet printheads of FIG. 6 illustrating the arrangement and colors of ink droplets emerging from the rows of nozzles of each inkjet print cartridge of the preferred embodiment.

FIG. 7B depicts composite ink droplet deposition on a portion of media deposited in a left to right pass and a portion of media deposited in a right to left pass of overlaid ink droplets created with the nozzle row and ink distribution configuration of FIG. 7A using all nozzles to print in the single-pass, bi-directional mode of the present invention.

FIG. 8A depicts an alternate embodiment of the nozzle layout of the present invention.

FIG. 8B depicts a portion of a left to right pass and a portion of a right to left pass of overlaid ink droplets created with the alternative nozzle configuration illustrated in FIG. 8A.

Detailed Description of a Preferred Embodiment

[0018] The preferred embodiment of the inkjet printer, as is about to be described, prints bi-directionally, so there is no time wasted on a carriage return; prints in a single-pass mode, so there is no time wasted on overlapping printing; and the deposition of ink droplets to form composite colors is performed in the same sequence whether traversing in a right to left direction or a left to right direction, thereby minimizing the directional related color hue shifts.

[0019] FIG. 1 illustrates a perspective view of an inkjet printer 100 incorporating the present invention. A media tray 110 holds a supply of input paper or other print media. When a printing operation is initiated, a sheet of paper or media in media tray 110 is fed into inkjet printer 100 and is then brought around in a U-direction towards an output tray 114. The sheet is stopped in a print zone 118 and a printhead carriage 102, containing multiple dual color inkjet printheads 108 and a single color printhead 106, is scanned along carriage traverse rail 104 across a printing width 120 of the inkjet printer 100 for printing a swath of ink onto the paper or media below. The sheet is advanced and the process repeats now in an opposite movement of the printhead carriage 102 until the entire sheet has been printed, at which point the printed media is ejected onto output tray 114.

[0020] Dual color inkjet printheads 108 and single color printhead 106 are fluidically coupled to removable secondary ink supplies 112 by ink conduits 116. Typically, these secondary ink supplies 112 hold Cyan, Magenta, Yellow and Black inks. An example of a commercially available three color inkjet print cartridge is a Model HP5659A available from Hewlett-Packard Co. Optionally, there is one single multicolored cartridge that replaces the dual color inkjet printheads 108 and the single color printhead 106 containing varying combinations of colors.

In the preferred embodiment of the invention, each single color inkjet printhead 106, dual color inkjet printhead 108, and secondary ink supply 112 is provided with an integral memory device which stores data that is used by inkjet printer 100 to control its printing operations.

[0021] FIG. 2 is an isometric view of a dual color inkjet printhead 108 according to one embodiment of the present invention. The inkjet printhead 108 includes a primary ink supply 212 and a flexible inkjet printhead circuit 202. The flexible inkjet printhead circuit 202 is formed on a flexible polymer tape using Tape Automated Bonding (TAB) techniques. One conventional technique is described in U.S. Pat. No. 4,917,286 (Pollacek). The flexible inkjet printhead circuit 202 includes an ink expulsion region 201 comprising a first nozzle row 206 and a second nozzle row 208. Each nozzle row contains a plurality of ink expulsion nozzles 210. The parallel nozzle rows, reference numerals 206 and 208, of ink expulsion nozzles 210, also commonly referred to as orifices, are formed in the flexible polymer tape by, for example, laser ablation. The tape may be purchased commercially as KAPTON tape, available from 3M Corporation. Other suitable tape may be formed of UPILEX or its equivalent. Alternatively, the ink expulsion nozzles 210 can be formed In a nickel or gold plate and attached to the flexible polymer tape.

[0022] A back surface of the flexible inkjet printhead circuit 202 (not shown) includes conductive traces formed, for example, by a conventional photolithographic etching and/or plating process. These conductive traces are terminated at one end by large electrical interconnect pads 214 designed to interconnect with an inkjet printer, and on the opposite end with the circuitry on a semiconductor substrate (not shown) attached to the back surface of the flexible inkjet printhead circuit 202 behind an ink expulsion region 201. The inkjet printheads, 106 and 108, are designed to be installed in a printer so that the electrical interconnect pads 214, which extend through to the front surface of the flexible inkjet printhead circuit 202, contact printer electrodes thereby providing externally generated energization signals to the inkjet printhead.

[0023] In the preferred embodiment of the present invention, each dual color inkjet printhead 108 has a divided primary ink supply 212, which contains two colors of ink. For clarity, FIG. 2 shows a flexible circuit centerline 204 where one color is stored and dispensed from one half of a primary ink supply 212 located approximately behind a first side of the flexible circuit centerline 204 using a first nozzle row 206 on that side. The second color of ink is stored and dispensed from the remaining half of the primary ink supply 212 located approximately behind the second side of the flexible circuit centerline 204 using a second nozzle row 208 on that side. As the ink is depleted from any of the primary ink supplies 212 of each dual color inkjet printheads 108 or the single color printhead 106, ink is replenished through ink conduits 116 from a secondary ink supply 112 (FIG. 1) containing the appropriate color of ink.

[0024] With dual color inkjet printheads 108 each dispensing two colors of ink, there are the number of printheads 108 times two rows of nozzles, each of which can contain a different color. In the preferred embodiment of the invention, there are three dual color inkjet printheads 108, with the first three rows of nozzles in a particular order and the second three rows of nozzles in the reverse order (CMYYMC). This symmetry of colors allows the inkjet printer 100 to dispense colors of ink in the same order regardless of printing direction (right to left or left to right). A further discussion of this symmetry is forthcoming.

[0025] FIG. 3 is a planar view of the front surface of the flexible inkjet printhead circuit 202 removed from the dual color inkjet print cartridge 108. Affixed to the back of the flexible printhead circuit 202 in the ink expulsion region 201 is the silicon substrate (not shown) containing a plurality of individually energizable thin film resistors. Each resistor is located generally behind a single ink expulsion nozzle 210 and acts as an ohmic heater when selectively energized by one or more pulses applied sequentially or simultaneously to one or more of the electrical interconnect pads 214.

[0026] FIG. 4 depicts a typical configuration of multiple single color inkjet printheads 106 each having a primary ink supply 212 and secondary ink supply 112 in a configuration of the current inkjet technology. Each printhead is a single color inkjet printhead 106 (both first nozzle row 206 and second nozzle row 208 dispense the same ink color) and are in fluid communication with a secondary ink supply 112 by an ink conduit 116. For clarity, the color of ink contained within each secondary ink supply 112 and primary ink supply 212 is shown in the shaded cutout windows on the fronts of each device. From left to right, the shading corresponds to Black, Cyan, Magenta and Yellow. This shading scheme will remain consistent throughout this specification.

[0027] On one surface of the single color inkjet printhead 106 is the attached flexible inkjet printhead circuit 202 which has two rows of ink expulsion nozzles (FIG. 1) where ink droplets 401 are ejected onto some form of media beyond. Typically, the single color inkjet printheads 106 are ordered Cyan, Magenta, and Yellow (CMY) with the Black (B) printhead on either side of the three-color printheads.

[0028] Typically, the physical placement of the secondary ink supplies 112, the fluid conduits 116, and the inkjet print cartridges in an inkjet printer 110 are similar as that shown in FIG. 1. However, other inkjet printing systems have the secondary ink supplies 112 attached to the inkjet print cartridges wherein both are stationed in the print cartridge carriage 102 and travel together along carriage traverse rail 104.

[0029] FIG. 5A depicts a section of four adjacent ink expulsion nozzles 210 from each inkjet printhead 108, across a width of the four inkjet printheads 108 of FIG. 4 FIG. 5A illustrates the arrangement and colors of ink droplets 401 emerging from the rows of ink expulsion

nozzles 210 of each inkjet printhead 108 with the colors ordered, as indicated by the shading, in nozzles rows from left to right as BBCCMMYY (Black, Cyan, Magenta, Yellow). In a preferred embodiment, each color has two rows of nozzles.

[0030] FIG. 5B is representative of the deposition of ink droplets 401 from the four-high section of ink expulsion nozzles 210 of FIG. 5A in both a left to right pass 530 of the inkjet print cartridges 106 and a right to left pass 540 of inkjet print cartridges 106. In this example, on the left to right pass 530, a shade of green is created by the combining of a droplet of Yellow ink from one of the two rows of a first ink color nozzles 501 and a droplet of Cyan ink from one of the two rows of a second ink color nozzles 503. An overlapping of droplets of Cyan ink with droplets of Yellow ink create the four by four matrix of first composite color "greenish hue" dots 531 as shown by area 530. Due to the left to right traverse of print cartridge carriage 102 (FIG. 1) and the physical BBCCMMYY ordering of the inkjet print cartridges 106, as shown in FIG. 5A, the first ink color nozzles 501 (Yellow) must be dispensed first with the ink droplets in the second ink color nozzles 503 (Cyan) being dispensed second.

[0031] Where the inkjet printer 100 is printing in a single-pass, bi-directional mode, after the inkjet printer 100 prints across the media from left to right, then indexes the print media, it will print the next swath of printing while the print cartridge carriage 102 is traversing right to left. For the example shown in FIG. 5B, this results in the four by four matrix of second composite color "greenish hue" ink dots 541 shown in FIG. 5B as right to left pass 540. Reversing the movement of the print cartridge carriage 102, reverses the order of the inkjet print cartridges 106 and, as a result, the second ink color nozzles 503 (Cyan) will be dispensed before the first ink color nozzles 501 (Yellow).

[0032] The difference between the first composite color greenish hue ink dots 531 applied in the left to right pass 530 of the inkjet printer 100 and the second composite color greenish hue ink dots 541 which are attempting to create the same color hue in a right to left pass 540, creates a visible "banding" effect or a color hue shift between adjacent swaths of printing. This banding varies depending on the combinations of primary colors required, but can be very noticeable as a typical swath of inkjet printing is approximately .30 to 1.00 inches ,or 7.62 to 25.40 mm, high.

[0033] Another inkjet printer has all three colors (Cyan, Yellow, and Magenta) contained in the same print cartridge, with the rows of nozzles in parallel, and located together in one six-row ink expulsion region 201 disposed on one single flexible inkjet printhead circuit 202. An example of a commercially available three color inkjet print cartridge is a Hewlett-Packard Model C1823A. The black print cartridge, however, is a separate print cartridge, typically placed to the left of the three-color cartridge. In this printer, the ink in the three-color cartridge is channeled to the particular nozzle row from the corresponding primary ink container thereby maintaining the CCMMYY color ordering. Therefore, deposition of ink droplets is similar to the described method of FIG. 5A and FIG. 5B above.

[0034] FIG. 6 depicts a combination of the single color inkjet print cartridge 106 (FIG. 4), the multiple dual color inkjet printheads 108 (FIG. 2), their respective secondary ink supplies 112, and the fluidic conduit interconnects 116 of the preferred embodiment of the present invention. As shown in FIG. 6, each dual color inkjet printhead 108 is of a similar size and shape as the single color inkjet printhead 106, but the primary ink supply 212 of each dual color inkjet printhead 108 is divided into two chambers which may each contain a different color of ink. In a preferred embodiment of the present invention, there are four secondary ink supplies 112 (Black, Cyan, Yellow, Magenta). The Black secondary ink supply 112, through an ink conduit 116, supplies the single color inkjet printhead 106 with ink. Each of the remaining three secondary ink supplies 112, through a pair of ink conduits 116, supply two primary ink supplies 212 of the remaining three dual color inkjet printheads 108.

[0035] The secondary ink supplies 112 distribute ink to the dual color inkjet printheads 108 in an order such that there is symmetry in the ordering of the colors of ink within the nozzle rows of six primary ink supplies 212. For example, in FIG. 6, the two outside primary ink supplies of the dual color inkjet printheads 108 contain the second ink color (Cyan in the preferred embodiment). The first ink color (Yellow in the preferred embodiment) is in both of the primary ink supplies 212 of the second dual color inkjet print cartridge 108. The third ink color (Magenta in the preferred embodiment) is in the remaining two primary ink supplies 212. This symmetry allows the dispensing of the ink in the same order whether the print cartridge carriage 102 (FIG. 1) is traversing right to left or left to right.

[0036] Alternatively, the middle dual color inkjet print cartridge 108 could have only one nozzle row, therefore only one primary ink supply 212 as the symmetry of the color of inks would be maintained. This results in an ink color ordering of BBCMYMC. Another order is contemplated where Black is the center color resulting in an ordering of CMYBBYMC. This would require four dual color inkjet print cartridges 108 and eliminate the need for the single color inkjet print cartridge 106. Any of the aforementioned orderings would produce the symmetrical ink dispensing desired in the present invention. Additionally, the symmetrical ordering of inks can be extended for any number of inks, for example ABCD...|...DCBA.

[0037] FIG. 7A is a section of the single color inkjet print cartridges 106 and the three dual color inkjet print cartridges 108 of FIG. 6 depicting the arrangement and colors of ink droplets 401 emerging from the rows of nozzles of each flexible inkjet printhead circuit 202. FIG. 7A is illustrative of a four-high section of ink expulsion nozzles 210 from the flexible inkjet printhead circuit 202 with the colors ordered in the nozzles rows from left to right

as BBCMYYMC. Each color has two rows of ink expulsion nozzles 210 and these two rows of ink expulsion nozzles 210 are symmetrical about an axis of symmetry 720. The axis of symmetry 720 is perpendicular to the printing width 120 of inkjet printer 100 (FIG. 1). Each dual color print cartridge 108 has its rows of ink expulsion nozzles 210 divided by flexible circuit centerline 204 (FIG.2).

[0038] The reason for the symmetrical ordering of the colors of inks is to minimize the color hue shift associated with the inability of an asymmetrical ordering to dispense ink in a like order when operating in a single-pass, bi-directional print mode as previously shown and discussed in FIG. 4, FIG. 5A and FIG. 5B.

[0039] FIG. 7B depicts a left to right pass 730 and a right to left pass 740 of overlaid ink droplets created with the nozzle row and ink distribution configuration of FIG. 7A using all ink expulsion nozzles 210 to print in the single-pass, bi-directional mode of the preferred embodiment of the present invention. These matrices of ink droplets are an example of alternating the ordering of the layering of the colors to get visibly one single color. In the left to right pass 730, first combined ink droplet 541 is created from an ink droplet from nozzle row 703 and an inkjet droplet from nozzle row 701 or nozzle row 702. The second combined ink droplet 531 is created from an ink droplet 401 from nozzle row 701 or nozzle 702 and an ink droplet from nozzle row 704. These two combined droplets, 541 and 531, represent the same color. However, as discussed previously and shown in FIG. 5B, with an area of first combined ink droplets 541 and an adjacent area of second combined ink droplets 531 a color hue shift is apparent between the two areas as demonstrated by left to right pass 530 and right to left pass 540. With the alternating ink droplet pattern of the preferred embodiment of the present invention as shown in FIG. 7B, the left to right pass 730 and the right to left pass 740 will appear to be the same color or hue. There will be a minimal color hue shift detectable between adjacent rows.

[0040] With all ink expulsion nozzles 210 being utilized in the alternating pattern shown in FIG. 7B, there will be no compromise in print speed to achieve this desirable high print quality.

[0041] In a fourth alternate embodiment, to achieve an even higher print quality, a first nozzle row 206 of each dual color inkjet printhead 108 is used for left to right printing only, while the second nozzle row 208 of each dual color inkjet printhead 108 is used for right to left printing only. This allows every combined droplet to be disposed in the same order, thereby creating an even more contiguous area of color in a single-pass, bi-directional printing mode. Although this compromises the printing speed, as only half of the nozzles are available for dispensing in each direction, the user can decide to forego speed for the higher print quality, for example for photos or precision illustrations.

[0042] A fifth alternate implementation is shown in FIG. 8A. Each color primary grouping contains enough ink expulsion nozzles 210 to represent half of the vertical resolution of the pen. Dimensional reference number 810 depicts the standard vertical spacing in an inkjet print cartridge where dimensional reference number 820 depicts twice the standard vertical spacing. Every other ink droplet 401 row is dispensed in an opposite order offset by one droplet 401 row.

[0043] In FIG. 8B, first combined ink droplet 541 is created by layering second color ink droplet 801 then first color ink droplet 802, while in the adjacent row of ink droplets, second combined ink droplet 531 is created by first color ink droplet 803 then second color ink droplet 804. The color hue shift, for this alternate example, will still occur, but on an ink droplet row basis rather than on a print swath basis as shown and described in FIG. 5B. However, at ink droplet row resolution, the color hue shift becomes much more difficult for the human eye to detect so the overall result is a reduction in observable color hue shift.

[0044] The aforementioned discussion and illustration of the present invention disclose the ability to achieve the highest quality color inkjet printing by implementing minimal, low cost solutions to the current inkjet technology in order to minimize the color hue shifts experienced in the previous inkjet printing systems while avoiding printing speed or printing cost compromises.

Claims

1. A printer (100) comprising:

a printhead carriage (102) comprising:

a first printhead (108), the first printhead being a dual color printhead having a first nozzle row (206) through which a first color fluid ejects, and a second nozzle row (208) through which a second color fluid ejects; and

a second printhead (108), wherein the second printhead is a dual color printhead having a first nozzle row (206) through which the second color fluid ejects, and a second nozzle row (208) through which the first color fluid ejects, wherein colors of the first and second printheads (108) are symmetrical about an axis of symmetry (720); and control means

characterised in that; said control means is configured to issue to the printheads (108) energization signals to form a composite matrix (730) of different hued composite dots onto a media, the control means controlling the printheads, during a single pass across the media, to form:

i) first hue composite dots (531) of a perceptible color formed by the ejection

of a first droplet (401) of the first color fluid onto the media and the ejection of a second droplet (401) of the second color fluid onto at least part of said first droplet (401); and
ii) second hue composite dots (541) of said perceptible color formed by the ejection of a third droplet (401) of said second color fluid onto the media and the ejection of a fourth droplet 401 of said first color fluid onto at least part of said third droplet (401);
said control means controlling placement of the first and second hued composite dots to produce a composite matrix in which said composite dots of said first and second hues alternate in both the rows and columns thereof.

2. A method of printing onto a media with a printer (100), the method comprising, during a single pass of a printhead carriage over the media:

ejecting a first droplet (401) of a first ink onto the media, and ejecting a second droplet (401) of a second ink onto at least part of said first droplet (401), thereby creating a first hue composite dot (531) of a perceptible color; and
ejecting a third droplet (401) of said second ink onto the media, and ejecting a fourth droplet (401) of said first ink onto at least part of said third droplet (401), thereby creating a second hue composite dot (541) of said perceptible color; and

wherein a composite matrix (730) has rows and columns of said composite dots of said perceptible color, wherein the composite matrix is created by alternating said first hue composite dots (531) and said second hue composite dots (541) in both the rows and columns thereof.

3. The printhead carriage (102) of claim 1 further comprising:

a third printhead (108), wherein the third printhead is a dual color printhead that is similar to the first and second printheads, wherein the third printhead is positioned in between the first and second printheads,

wherein the axis of fluid color symmetry (720) is located in between the nozzles rows (206, 208) in the third printhead (108), and colors of the first, second and third printheads are symmetrical about the axis of symmetry (720).

4. The printhead carriage (102) of claim 3 further comprising a fourth printhead (106), the fourth printhead being a single color printhead having at least one nozzle row.

5. The printhead carriage (102) of claim 3 wherein the two nozzle rows (206, 208) of the third printhead (108) each correspond with a same color.

Patentansprüche

1. Ein Drucker (100), der folgende Merkmale aufweist:

einen Druckkopfwagen (102), der folgende Merkmale aufweist:

einen ersten Druckkopf (108), wobei der erste Druckkopf ein Zweifarbendruckkopf ist, der eine erste Düsenzeile (206), durch die ein Fluid einer ersten Farbe aufgestoßen wird, und eine zweite Düsenzeile (208) aufweist, durch die ein Fluid einer zweiten Farbe ausgestoßen wird; und
einen zweiten Druckkopf (108), wobei der zweite Druckkopf ein Zweifarbendruckkopf ist, der eine erste Düsenzeile (206), durch die das Fluid der zweiten Farbe aufgestoßen wird, und eine zweite Düsenzeile (208) aufweist, durch die das Fluid einer ersten Farbe ausgestoßen wird, wobei Farben des ersten und des zweiten Druckkopfs (108) um eine Symmetrieachse (720) symmetrisch sind; und
eine Steuereinrichtung,

dadurch gekennzeichnet, dass:

die Steuereinrichtung konfiguriert ist, um an die Druckköpfe (108) Energieversorgungssignale auszugeben, um eine zusammengesetzte Matrix (730) von zusammengesetzten Punkten unterschiedlicher Farbtöne auf einem Medium zu bilden, wobei die Steuereinrichtung die Druckköpfe während eines einzigen Durchlaufs über das Medium steuert, um folgendes zu bilden:

i) zusammengesetzte Punkte (531) eines ersten Farbtons einer wahrnehmbaren Farbe, die durch den Ausstoß eines ersten Tröpfchens (401) des Fluids der ersten Farbe auf das Medium und den Ausstoß eines zweiten Tröpfchens (401) des Fluids der zweiten Farbe auf zumindest einen Teil des ersten Tröpfchens (401) gebildet sind; und
ii) zusammengesetzte Punkte (541) eines zweiten Farbtons der wahrnehm-

baren Farbe, die durch den Ausstoß eines dritten Tröpfchens (401) des Fluids der zweiten Farbe auf das Medium und den Ausstoß eines vierten Tröpfchens (401) des Fluids der ersten Farbe auf zumindest einen Teil des dritten Tröpfchens (401) gebildet sind;

wobei die Steuereinrichtung eine Platzierung der zusammengesetzten Punkte des ersten und des zweiten Farbtons steuert, um eine zusammengesetzte Matrix zu erzeugen, bei der die zusammengesetzten Punkte des ersten und des zweiten Farbtons sich sowohl in den Zeilen als auch den Spalten derselben abwechseln.

2. Ein Verfahren zum Drucken auf ein Medium mit einem Drucker (100), wobei das Verfahren während eines einzigen Durchlaufs eines Druckkopfwagens über dem Medium folgende Schritte aufweist:

Ausstoßen eines ersten Tröpfchens (401) einer ersten Tinte auf das Medium und Ausstoßen eines zweiten Tröpfchens (401) einer zweiten Tinte auf zumindest einen Teil des ersten Tröpfchens (401), wodurch ein zusammengesetzter Punkt (531) eines ersten Farbtons einer wahrnehmbaren Farbe erzeugt wird; und
Ausstoßen eines dritten Tröpfchens (401) der zweiten Tinte auf das Medium und Ausstoßen eines vierten Tröpfchens (401) der ersten Tinte auf zumindest einen Teil des dritten Tröpfchens (401), wodurch ein zusammengesetzter Punkt (541) eines zweiten Farbtons der wahrnehmbaren Farbe erzeugt wird; und

wobei eine zusammengesetzte Matrix (730) Zeilen und Spalten der zusammengesetzten Punkte der wahrnehmbaren Farbe aufweist, wobei die zusammengesetzte Matrix durch ein Abwechseln der zusammengesetzten Punkte (531) des ersten Farbtons und der zusammengesetzten Punkte (541) des zweiten Farbtons in sowohl den Zeilen als auch den Spalten derselben erzeugt wird.

3. Der Druckkopfwagen (102) gemäß Anspruch 1, der ferner folgende Merkmale aufweist:

einen dritten Druckkopf (108), wobei der dritte Druckkopf ein Zweifarbendruckkopf ist, der dem ersten und dem zweiten Druckkopf ähnlich ist, wobei der dritte Druckkopf zwischen dem ersten und dem zweiten Druckkopf positioniert ist,

wobei die Achse einer Fluidfarbsymmetrie (720) zwischen den Düsenzeilen (206, 208) in dem dritten Druckkopf (108) positioniert ist und Farben des ersten, des zweiten und des dritten Druckkopfs um die Symmetrieachse (720) symmetrisch sind.

4. Der Druckkopfwagen (102) gemäß Anspruch 3, der ferner einen vierten Druckkopf (106) aufweist, wobei der vierte Druckkopf ein Einfarbendruckkopf ist, der zumindest eine Düsenzeile aufweist.

5. Der Druckkopfwagen (102) gemäß Anspruch 3, bei dem die zwei Düsenzeilen (206, 208) des dritten Druckkopfs (108) einer gleichen Farbe entsprechen.

Revendications

1. Imprimante (100) comprenant :

■ un chariot de tête d'impression (102) comprenant :

■ une première tête d'impression (108), la première tête d'impression étant une tête d'impression à deux couleurs ayant une première rangée de buses (206) à travers laquelle un premier fluide coloré est éjecté, et une seconde rangée de buses (208) à travers laquelle un second fluide coloré est éjecté ; et
■ une seconde tête d'impression (108), dans laquelle la seconde tête d'impression est une tête d'impression à deux couleurs ayant une première rangée de buses (206) à travers laquelle le second fluide coloré est éjecté, et une seconde rangée de buses (208) à travers laquelle le premier fluide coloré est éjecté, dans laquelle les couleurs des première et seconde têtes d'impression (108) sont symétriques sur un axe de symétrie (720) ; et
■ des moyens de commande, **caractérisés en ce que :**

■ lesdits moyens de commande sont configurés pour délivrer aux têtes d'impression (108) des signaux d'alimentation pour former une matrice composite (730) de différents points composites nuancés sur un support, les moyens de commande commandant les têtes d'impression, pendant un seul passage sur le support, pour former :
■ des premiers points composites nuancés (531) d'une couleur perceptible formée par l'éjection d'une première gutte (401) du premier fluide de couleur sur le support et l'éjection d'une deuxième goutte (401) du second fluide de couleur sur au moins une partie de ladite première goutte (401) ; et
■ des seconds points composites nuancés (541) de ladite couleur perceptible formée par

l'éjection d'une première goutte (401) dudit second fluide de couleur sur le support et l'éjection d'une quatrième goutte (401) dudit premier fluide de couleur sur au moins une partie de ladite troisième goutte (401) ;

■ lesdits moyens de commande commandant l'emplacement des premiers et seconds points composites nuancés pour produire une matrice composite dans laquelle lesdits points composites desdites première et seconde nuances s'alternent dans leurs rangées et leurs colonnes.

2. Procédé pour imprimer sur un support avec une imprimante (100), le procédé, pendant un seul passage d'un chariot de tête d'impression sur le support, comprenant les étapes consistant à :

■ éjecter une première goutte (401) d'une première encre sur le support, et éjecter une deuxième goutte (401) d'une seconde encre sur au moins une partie de ladite première goutte (401), créant ainsi un premier point composite nuancé (531) d'une couleur perceptible ; et

■ éjecter une troisième goutte (401) de ladite seconde encre sur le support et éjecter une quatrième goutte (401) de ladite première encre sur au moins une partie de ladite troisième goutte (401), créant ainsi un second point composite nuancé (541) de ladite couleur perceptible ; et

dans lequel une matrice composite (730) a des rangées et des colonnes desdits points composites de ladite couleur perceptible, dans lequel la matrice composite est créée en alternant desdits premiers points composites nuancés (531) et desdits seconds points composites nuancés (541) à la fois dans leurs rangées et leurs colonnes.

3. Chariot de tête d'impression (102) selon la revendication 1, comprenant en outre :

■ une troisième tête d'impression (108), dans laquelle la troisième tête d'impression est une tête d'impression à deux couleurs qui est similaire aux première et deuxième têtes d'impression, dans lequel la troisième tête d'impression est positionnée entre les première et deuxième têtes d'impression,

dans lequel l'axe de symétrie de couleur de fluide (720) est situé entre les rangées de buses (206, 208) dans la troisième tête d'impression (108) et les couleurs des première, deuxième et troisième têtes d'impression sont symétriques autour de l'axe de symétrie (720).

4. Chariot de tête d'impression (102) selon la revendication 3, comprenant en outre une quatrième tête d'impression (106), la quatrième tête d'impression étant une tête d'impression à une seule couleur ayant au moins une rangée de buses.

5. Chariot de tête d'impression (102) selon la revendication 3, dans lequel les deux rangées de buses (206, 208) de la troisième tête d'impression (108) correspondent chacune à une même couleur.

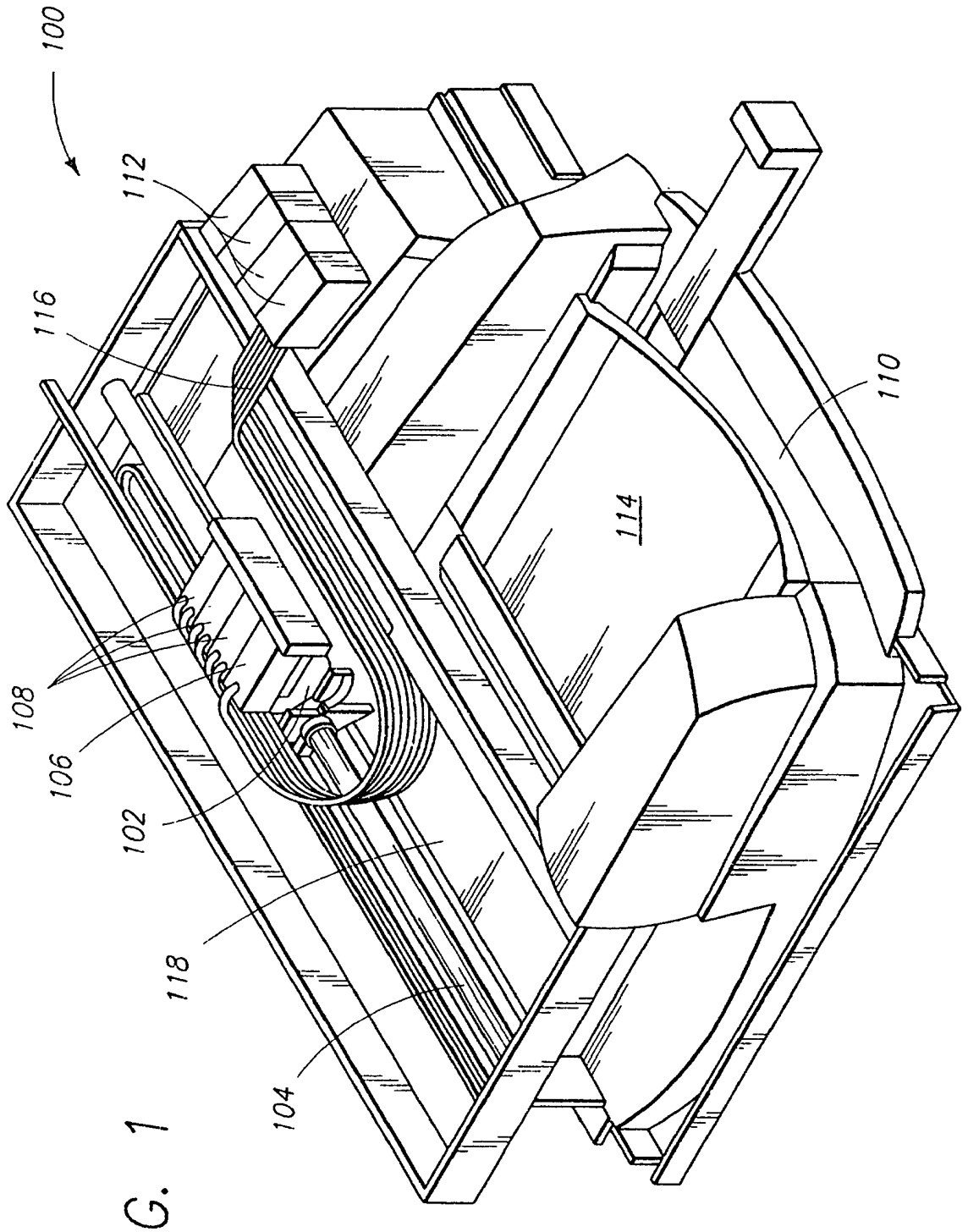

FIG. 1

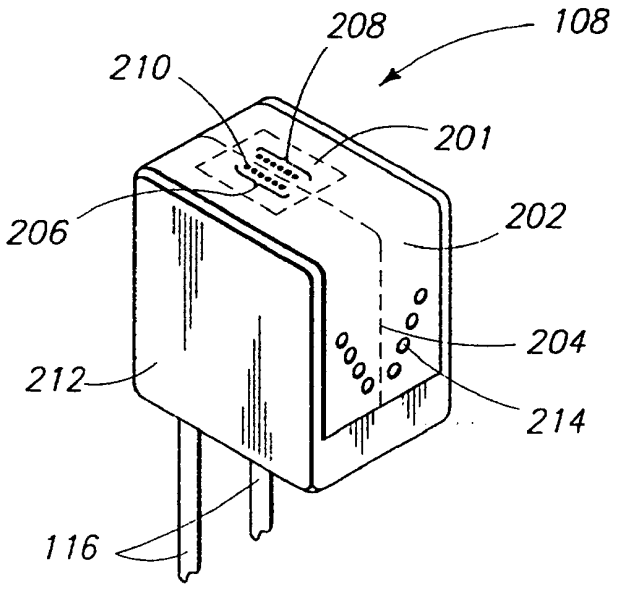
208
108
210
201
206
202
204
212
214
116

FIG. 2

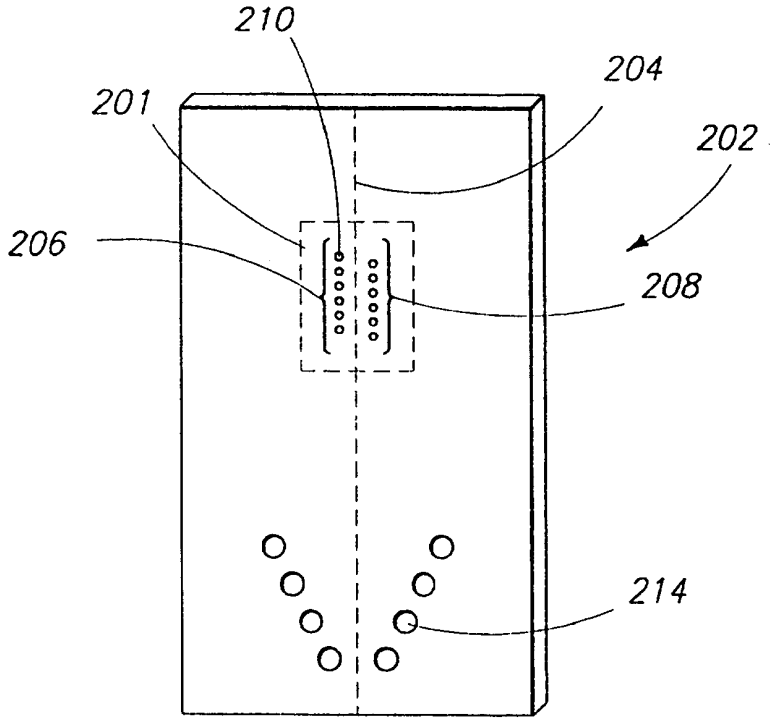
210
204
201
202
206
208
214

FIG. 3

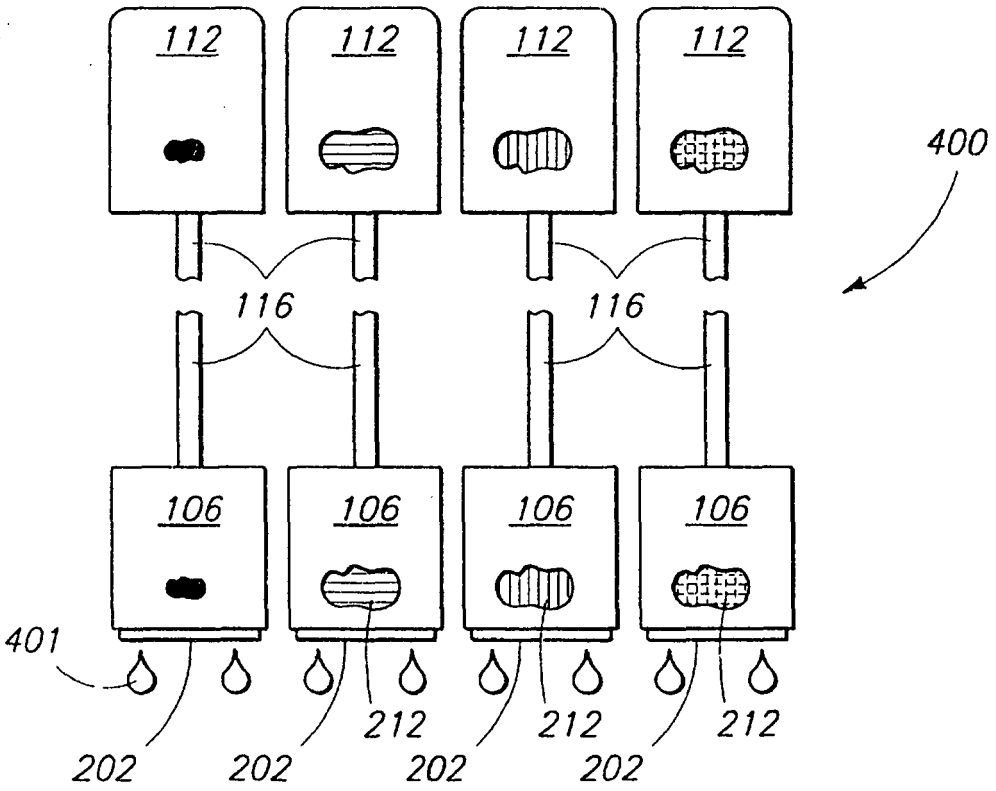
112
112
112
112
400
116
116
106
106
106
106
401
202
202
212
202
212
202
212

FIG. 4

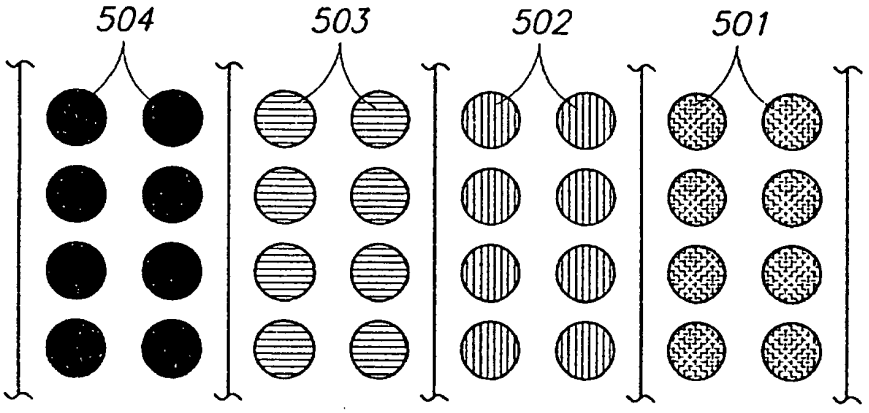

FIG. 5A

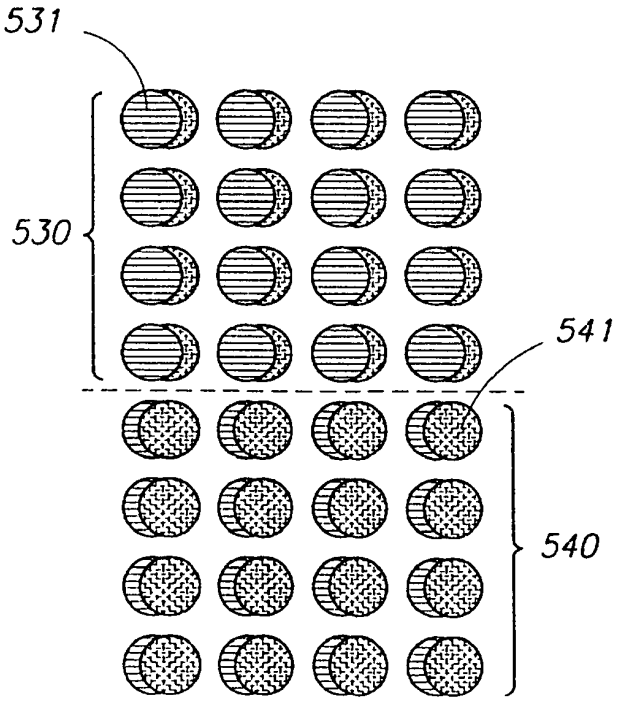

FIG. 5B

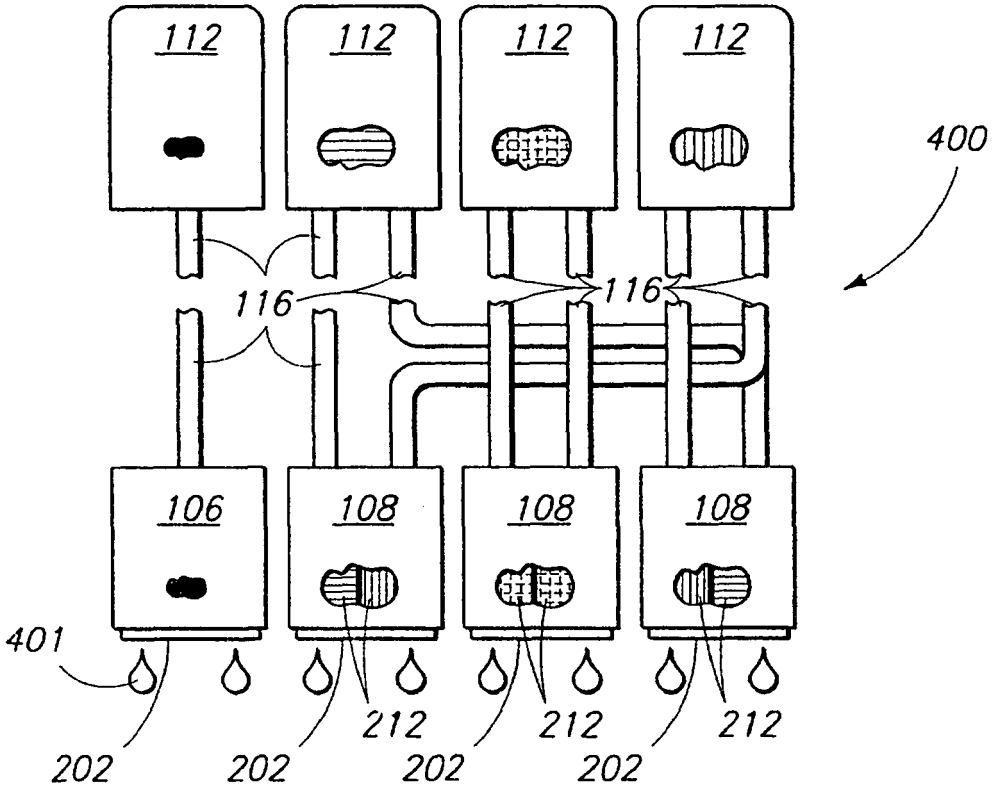
112
112
112
112
400
116
116
106
108
108
108
401
202
202
202
202
212
212
212

FIG. 6

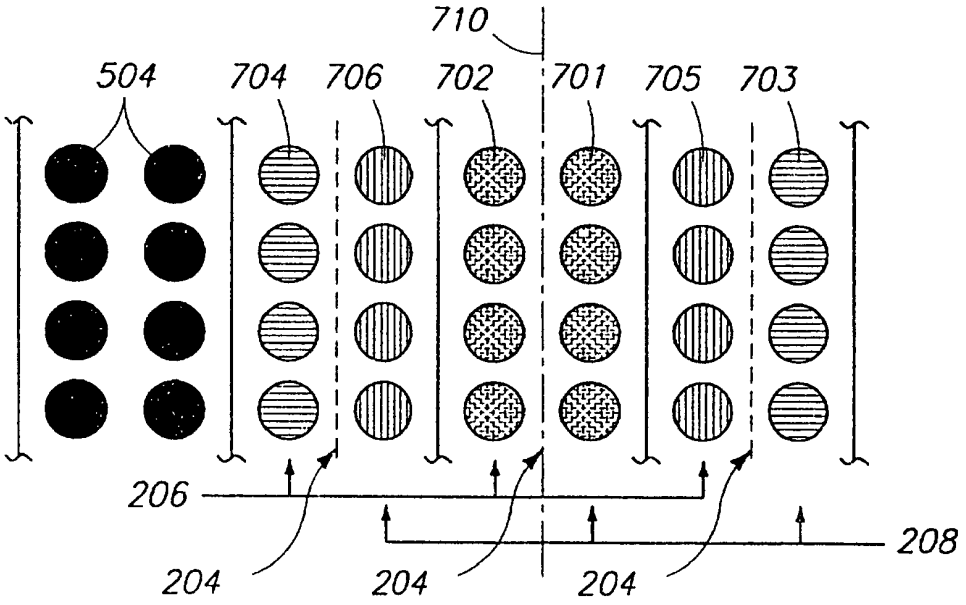
710
504
704
706
702
701
705
703
206
208
204
204
204

FIG. 7A

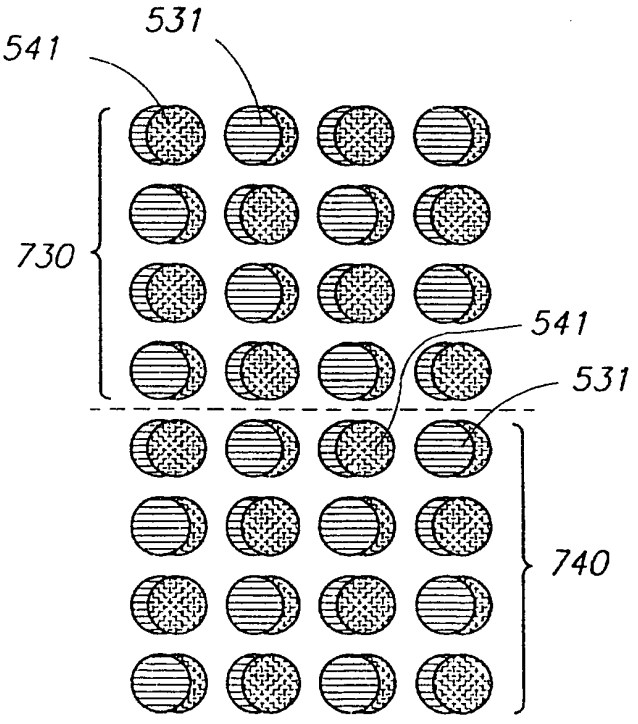
531
541
730
541
531
740

FIG. 7B

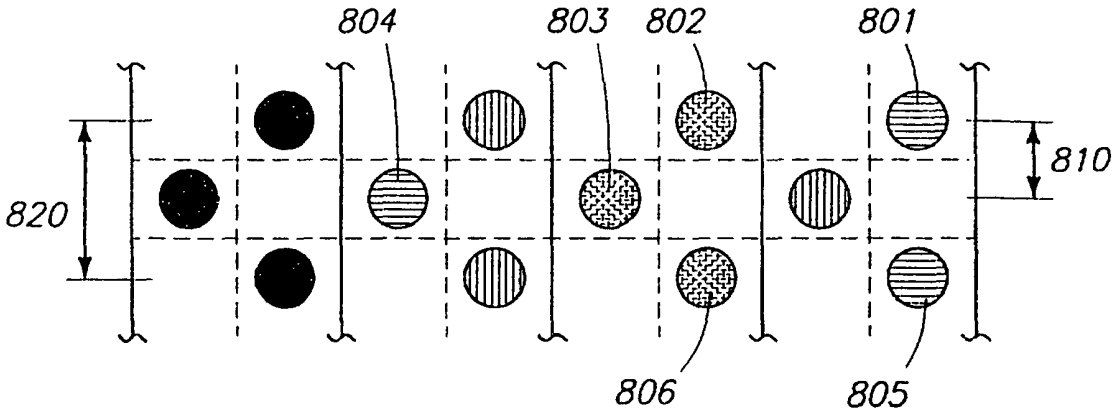

FIG. 8A

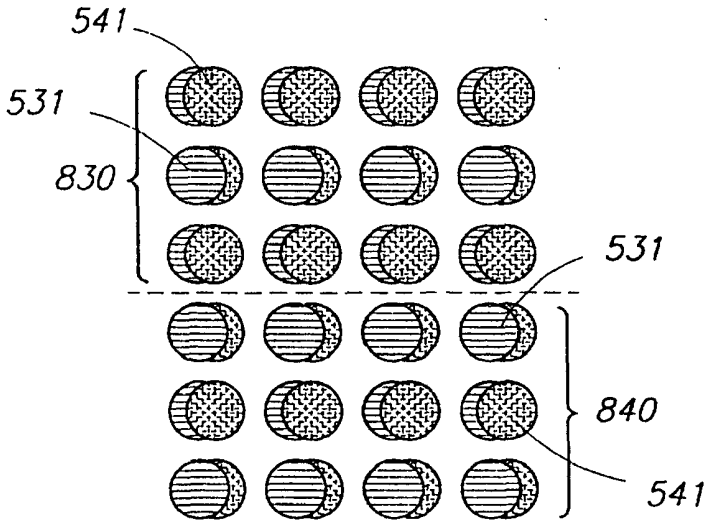

FIG. 8B

REFERENCES CITED IN THE DESCRIPTION

This list of references cited by the applicant is for the reader's convenience only. It does not form part of the European patent document. Even though great care has been taken in compiling the references, errors or omissions cannot be excluded and the EPO disclaims all liability in this regard.

Patent documents cited in the description

- JP 03045351 B **[0013]**
- US 4593295 A **[0014]**
- JP 08295034 B **[0015]**
- US 4917286 A, Pollacek **[0021]**

Non-patent literature cited in the description

- *Hewlett-Packard Journal,* May 1985, vol. 36 (5 **[0003]**
- *HEWLETT-PACKARD JOURNAL,* August 1988, vol. 39 (4 **[0003]**
- *HEWLETT-PACKARD JOURNAL,* October 1988, vol. 39 (5 **[0003]**
- *HEWLETT-PACKARD JOURNAL,* August 1992, vol. 43 (4 **[0003]**
- *HEWLETT-PACKARD JOURNAL,* December 1992, vol. 43 (6 **[0003]**
- *HEWLETT-PACKARD JOURNAL,* February 1994, vol. 45 (1 **[0003]**
- **W.J. LLOYD ; H.T. TAUB.** Output Hardcopy Devices. Academic Press, 1988 **[0003]**