June 26, 1956 W. LIMBERGER 2,751,814

PHOTOGRAPHIC PRINT MAKING MACHINE

Filed June 28, 1952

FIG. 1

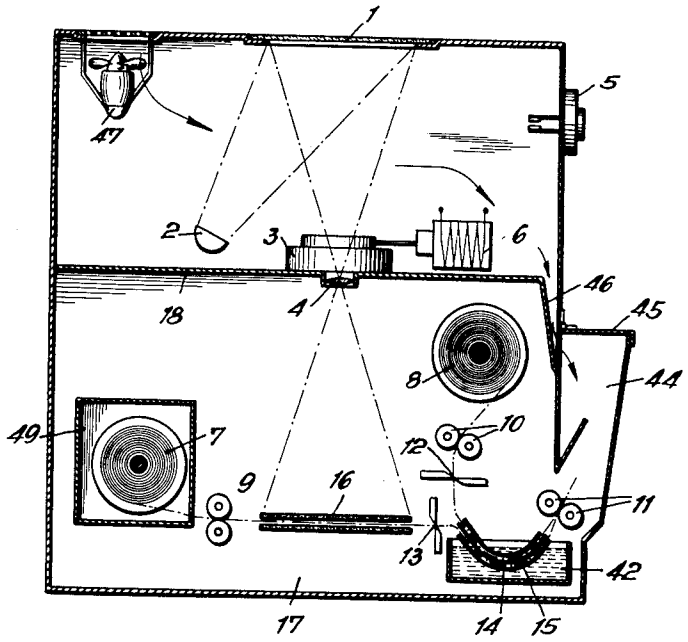

FIG. 2

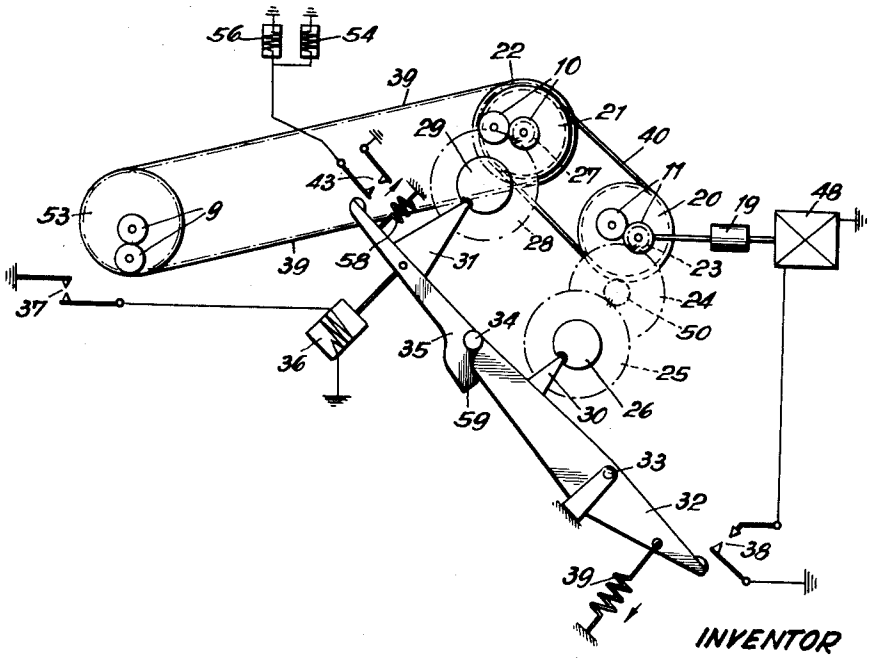

INVENTOR

Walter Limberger

by Lawrence X Beaman

Attorney

United States Patent Office 2,751,814
Patented June 26, 1956

2,751,814

PHOTOGRAPHIC PRINT MAKING MACHINE

Walter Limberger, Hamburg, Germany, assignor to Messrs. Lumoprint Zindler K. G., Hamburg, Germany

Application June 28, 1952, Serial No. 296,170

Claims priority, application Germany December 31, 1951

8 Claims. (Cl. 88—24)

This invention relates to devices for making photographic prints of the kind operating according to the so-called diffusion method. This method consists therein that a light-sensitive coating—a negative paper—will be exposed to the image to be copied in order to produce a latent image therefrom which is transferred to a light-insensitive coating—a transfer paper—and made visible by treating both coatings in a developer solution and pressing or squeezing them against each other.

With regard to the details of this method it is to be noted that negative papers of the type referred to are provided with a normal bromine chlorine silver emulsion containing for instance 70% chlorine silver and 30% bromine silver, the portion of chlorine silver determining the degree of light-sensitivity of the negative paper with a view to permit treating in the presence of daylight. The transfer paper provided for the positive image carries a coating (such as a gelatine coating) containing colloidal silver which has been exposed before emulsionizing, so that the transfer paper is non light-sensitive.

The negative paper after having been exposed to the image to be copied will be treated together with the transfer paper for a short period of time, for instance two or three seconds in a developing fluid such as an alkaline solution. During this treatment, at first the exposed silver of the negative paper becomes black and thereupon the unexposed bromine silver of the negative paper will be fixed and transferred to the transfer paper by diffusion causing a transformation of the transfer paper silver already exposed. To ensure a faultless transfer from the negative to the transfer paper both papers after treatment in the developer are pressed or squeezed—coating against coating—in contact with each other whereupon they may be separated.

Upon working in accordance with this method, two separate devices have been used hitherto, i. e. one device for exposing the paper and a second device for developing the image and for pressing both coating carriers firmly against each other. The exposure device may be constructed to work as direct contact printer, giving copies of only the same size as the original, or to work with an interposed lens, giving copies on any desired scale.

The procedure in handling such two devices includes numerous manipulations, and certain experience and skill are necessary for obtaining good photostats with such outfit. Furthermore, the time consumed in making a copy in this manner is relatively long. In order not to make the exposure too complicated, it was practically necessary to use negative paper of low light sensitivity with a view to permit working in only slightly darkened daylight. The application of such low-sensitivity paper, of course, increases again the time required for making a photostatic copy.

The present invention aims at overcoming the drawbacks mentioned above by providing a device for making photographic prints of the type referred to operating completely automatically and at a considerable higher speed than hitherto possible.

Another object of the present invention is to provide a device for making photographic prints which allows the use of negative paper of high light-sensitivity without complicating its operation and its attendance.

A further object of the present invention is to provide a device for making photographic prints wherein the coating carriers may be wound on reels for continuously supplying the negative and the transfer paper so that upon producing a great number of photostats the operation and the handling are materially facilitated.

These and other objects and advantages of the present invention will be more fully explained with reference to the accompanying drawing showing for the purpose of illustration a preferred embodiment of the device according to the invention, it being understood that the following description is not to be designed as a definition of the limits of the invention.

In the drawing:

Fig. 1 is a diagrammatic side view showing the mechanical arrangement of such a device; and

Fig. 2 is a diagram of electric circuit connections showing the several elements and their connections; and indicating their mode of operation.

As can be seen in Fig. 1 of the drawing, the whole mechanism is mounted within a common housing **17** which is subdivided into two compartments by a partition **18**. Upon a glass plate **1** there is placed the original with the side to be copied downward. However, it is also possible to use a modified arrangement in which this glass plate or window for placing the original is located in the bottom of the housing and the other mechanism is mounted thereabove.

The original is illuminated by a reflector lamp **2**. Instead of such a lamp, magnesium light or the like may be used. It is also possible to apply tubular lamps, fluorescent lamps, mercury-arc lamps, etc. for that purpose.

By means of a lens **4**, mounted in an opening in partition **18**, the image of the original is projected against a screen surface or frame **16** including two glass plates in parallel arrangement forming a small space for receiving the negative paper. In order to render adjustment possible for any desired scale or size of the image relative to the original, the screen frame **16** and the lens are mounted so as to be adjustable in the direction of the light rays in any suitable manner.

The shutter **3** of the lens **4** is arranged to be actuated by an electromagnet **6** and the shutter speed is controlled by an exposure metering device **5**. The exposure metering device may be, for example, an exposure clock, a spring-actuated shutter, such as a Compur shutter, or an electric clock. It is also possible to employ a light-metering device or a combination of a clock and a light-metering device. In this connection, a light-metering device is to be understood as being a device capable of integrating the amount of light reflected from the original and effecting actual light measuring. The shutter **3**, in its opened position, permits the light, reflected from the original, to reach and influence the light-sensitive coating of the negative paper between said two glass plates of the screen frame **16**. The time of exposure depends on the shutter speed which in turn is governed by the exposure metering device **5**, already referred to.

The partition **18** separates the picture or exposure compartment from the paper or copying compartment.

The negative paper **7**, supplied as band material from a reel within a light-proof container or magazine **49**, is guided, with its coating toward the lens, by a pair of feed rollers **9**, through the screen frame **16** so that it

lies parallel relative to the plane of the lens 4 and to the plane of the original. Since negative paper of high light sensitivity is preferably employed, it has been found advisable to arrange the light-proof paper magazine 49 within the housing 17. Instead of the pair of feed rollers 9, other suitable paper passing or feeding means, such as grippers, etc., may be employed.

As soon as the exposure metering device 5 is put in action by the operator, it opens the shutter 3 for the present duration and then closes it again. Thereupon, the exposure metering device delivers an electrical impulse for closing a contact 37 (Fig. 2) in the energizing circuit of an electromagnet 36. Closing of contact 37 and energizing of electromagnet 36 may be effected mechanically, for instance, by the exposure clock lever which, after having switched off the clock, swings elastically a little forward and thus closes contact 37 momentarily, or, in the case of an electric clock or a light-metering device, an electrical impulse can be effected in such a manner that after expiration of the exposure period a charged condenser will be discharged through the coil of electromagnet 36. An electric motor 48, which can be started by closing contacts 38, drives by means of a resilient or elastic coupling 19 a transmission gearing comprising the gears 23, 24, 50 and 25. This transmission gearing will be denoted as first control gear throughout the following description. Gear 23 drives a pair of rollers 11 for moving negative paper and transfer paper in a generally known manner through the developer 42 and squeezes both papers in contact with each other after they have passed the developer. Gear 23 is mounted on a shaft carrying a cam disk 26 provided with a notch coacting with a cam follower or locking member 30 mounted on a double armed lever 32. This lever 32 is pivoted at 33 and is resiliently urged by a spring 39 in such a direction that cam follower 30 rides on the periphery of cam disk 26. One arm of lever 32 is further provided for actuation of a pair of contacts 38 which when closed become effective in starting motor 48. The contacts 38 are opened when cam follower 30 engages the notch in cam disk 26.

Mounted on the shaft of gear 23 is a disk 20 driving by means of an endless round belt or cord 40 another disk 21. The shaft of disk 21 carries a gear 27 which meshes with a gear 28 mounted on a shaft carrying also cam disk 29. This gearing constitutes the second control gear. The shaft of gear 27 furthermore drives a pair of feed rollers 10 adapted to feed transfer paper, supplied as band material from a reel 8 disposed in the paper compartment, into the device in which the negative and transfer papers are developed and thereafter squeezed against each other. A sprocket 22, mounted on the shaft of gear 27, drives by way of a chain 39 and another sprocket 53 the feed rollers 9, above referred to, which serve to feed negative paper 7 from its reel toward the screen frame 16 as already described.

A developing and squeezing device, which may be of any well-known construction, includes the container 42 for the developer solution, the container having channels 14 and 15 provided therein. The exposed negative paper is passed through channel 14 and the transfer paper, through channel 15. On leaving the channels both papers enter between the squeezing rollers 11. A cutting device 13 actuated by an electromagnet 54 is arranged between the screen frame 16 and the entering end of channel 14. Another cutting device 12 is interposed between the feed rollers 10 and the entering end of channel 15, which device 12 is actuated by an electromagnet 56.

One of the arms of double lever 32 carries a lever 35 which is pivotally mounted at 34 and adapted to actuate a pair of contacts 43 for controlling the electromagnets 54 and 56 serving to operate the cutting devices 12 and 13. This lever 35 is also provided with a cam follower 31 cooperating with cam disk 29 having a notch in its periphery. Normally, a spring 58 urges follower 31 into the notch of cam disk 29 and a stop 59 provides that lever 35 may be swung only in a clockwise direction about its pivot 34, i. e., is prevented from being swung backward relative to lever 32.

The contacts 38 are closed when the attracting electromagnet 36 swings levers 35, 32 backward against the action of springs 58 and 59. It will be remembered that the electro-magnet 36 is energized for attraction by an electric impulse initiated by the exposure metering device 5. The backward movement of levers 32, 35 causes the cam followers 30 and 31 to disengage the notches in disks 26 and 29 respectively so that both control gears coordinated to these cam disks 26 and 29 can rotate when motor 48 starts running. The motor 48 drives by means of the elastic coupling 19 the gear 23 which is in rigid operative connection with the pair of squeezing rollers 11 and disks 20 and 21 operate in combination with a round belt or cord 40 and an elastic or slip coupling.

The sprocket 22 is rigidly secured to gear 27 and is in operative connection with sprocket 53 by means of drive chain 39. The meshing gears 27, 28 are designed such that during the time the cam disk 29 has made one revolution the pairs of rollers 9 and 10 feed sufficient lengths of negative and transfer paper, respectively, in accordance with a desired sheet unit. After one revolution of cam disk 29, the cam follower 31 engages its notch again by the action of spring 58, and both pairs of rollers 9 and 10 must stop their rotary movement with the result that the paper movement will be interrupted. Simultaneously, the lever 35 closes the contacts 43 thereby exciting the electromagnets 54 and 56 which in turn actuate the cutting devices 12 and 13. Thus, the cutting device 12 severs a sheet of transfer paper and the cutting device 13, a sheet of negative paper from the respective paper bands.

The motor 48 still continues to run because cam follower 30 has not yet engaged its notch in cam disk 26 and thus the contacts 38 are still held in closed relation. This continued operation of the motor is made possible by the action of the slip connection between the now stalled drive member of the second control gear and the motor as provided by the belt or cord 40 now slipping on its disks 20 and 21.

The ratios of the gear 23, 24, 50 and 25 are properly chosen so that during the time the cam disk 26 has made one revolution (360 angular degrees) the negative and transfer papers have just passed their respective channels 14, 15 in the developer container 42 and the pair of squeezing rollers 11 including a stripping-off device.

When now, after one complete working cycle, cam follower 30 again enters its notch in the periphery of cam disk 26 under the action of spring 39, the downwardly extending arm of double lever 32 releases the contacts 38 which thereby open and interrupt the circuit of motor 48, this motor being preferably a geared head motor. Since the gear train is retained by the cam follower 30, engaged in the notch of cam disk 26, the kinetic energy of the decelerating masses of the motor armature set up a certain tension in the elastic friction coupling 19 in the direction of motor rotation. This moderate torsional tension is transmitted by the drive members to the cam disks 26 and 29 and provides that, at the instant the electric starting impulse energizes the electromagnet 36 to attract and withdraw the cam followers 30, 31 from their respective notches in cam disks 26, 29, the cam disks continue their rotation by a small amount so that the followers engage the peripheries of said disks. The motor 48 remains switched on until the whole working cycle, as just described, is finished.

After leaving the squeezing rollers 11, the finished photostat enters a light-proof chamber 44 closed by a removable cover 45. From this chamber the finished

photostat may be removed and separated from the negative.

An air flow produced by a fan 47 passes through the upper compartment in the housing 17 and through a channel 46 into chamber 44. Upon flowing through the upper compartment comprising the lamp 2 the air will be heated and is adapted therefore to dry the finished photostats in chamber 44.

While I have described and illustrated my invention by a special embodiment shown in the drawing, it will be readily understood by those skilled in the art that the description is not to be taken in a limiting sense, many modifications of the embodiment as shown being possible within the scope of my invention as defined in the appended claims.

What I claim is:

1. A device for making photographic prints comprising exposure means for exposing a light-sensitive sheet including an objective lens, a shutter and a shutter operating mechanism, a developer for developing the exposed light-sensitive paper, feeding rollers for moving the light-sensitive paper and a light-insensitive transfer paper through said developer, pressing rollers at the exit side of said developer for pressing the two papers coming from the developer against each other, a first controlling gear operatively connected to said pressing rollers, a second controlling gear operatively connected to said feeding rollers, an electric driving motor in driving connection with said first and said second controlling gear, switch means for switching on said motor and said two controlling gears in response to the shutting operation of said shutter, and means adapted to be actuated by said first gear for switching off said motor.

2. A device as claimed in claim 1 in which said motor directly drives said first gear, said second gear being driven from said first gear by means of a slip coupling.

3. A device as claimed in claim 1, in which a resilient coupling is provided between said motor and said first gear.

4. A device for making photographic prints comprising exposure means for exposing a light-sensitive paper including an objective lens, a shutter and a shutter operating mechanism, a developer for developing the exposed light-sensitive paper, feeding rollers for moving the light-sensitive paper and a light-insensitive transfer paper through said developer, pressing rollers at the exit side of said developer for pressing the two papers coming from the developer against each other, a first controlling gear operatively connected to said pressing rollers, a second controlling gear operatively connected to said feeding rollers, an electric driving motor in driving connection with said first and said second controlling gears, switch means for switching on said motor and said two controlling gears in response to the shutting operation of said shutter, and means adapted to be actuated by said first gear for switching off said motor, said first and said second gear each including a rotable cam member having a notch and a locking member cooperating in spring pressed relation with said cam member for engaging said notch after each revolution of said cam member, so as to determine the controlling period in accordance with one revolution of said cam member.

5. A device for making photographic prints comprising exposure means for exposing a light-sensitive paper including an objective lens, a shutter and a shutter operating mechanism, a developer for developing the exposed light-sensitive paper, feeding rollers for moving the light-sensitive paper and a light-insensitive transfer paper through said developer, pressing rollers at the exit side of said developer for pressing the two papers coming from the developer against each other, a first controlling gear operatively connected to said pressing rollers, a second controlling gear operatively connected to said feeding rollers, an electric driving motor in driving connection with said first and said second controlling gear,

said first and said second controlling gear each including a rotatable cam member having a notch and a locking member cooperating in spring pressed relation with said cam member for engaging said notch after each revolution of said cam member, a two armed lever, a switch arranged to be actuated by said lever for switching on said motor, said lever carrying said locking member of said first gear, spring means acting on said lever to move it in a position in which the locking member retains the corresponding cam member and the motor is switched off, a second lever rockably mounted in one direction only on said two armed lever, said second lever carrying the locking member for the said second gear, cutting means arranged at the entrance side of said developer for cutting the papers in response to the desired photostat size, an electric contact carried by said second lever for actuating said cutting means, further spring means acting on said second lever to move it in a position in which the second gear locking member retains the respective cam member and the cutting means are switched on, electromagnetic means adapted to be excited in accordance with the shutting of said shutter and to disengage said two locking members of said first and said second gear as well as to switch on said driving motor against the action of said spring means.

6. A device as claimed in claim 5, in which electromagnetic actuators are operatively connected to said cutting means for operating same.

7. A device for making photographic prints comprising exposure means for exposing a light-sensitive sheet including an objective lens, a shutter and a shutter operating mechanism, a developer for developing the exposed light-sensitive sheet, feeding rollers for moving the light-sensitive sheet and a light-insensitive transfer sheet through said developer, pressing rollers at the exit side of said developer for pressing the two sheets against each other after they leave the developer, a first controlling gear operatively connected to said pressing rollers, a second controlling gear operatively connected to said feeding rollers, an electric driving motor for driving said two gears, a resilient coupling arranged between said motor and said first gear, a slip coupling between said first and said second gear to drivingly connect said second gear to said first gear, switch means for switching on said motor and said two controlling gears in response to the shutting operation of said shutter and means adapted to be actuated by said first gear for switching off said motor.

8. A device for making photographic prints comprising a housing, a partition wall in said housing dividing it into a first and a second chamber, exposing means in said first chamber for exposing a light sensitive sheet provided in said second chamber, a developer in said second chamber for developing said exposed light sensitive sheet, a light insensitive transfer sheet disposed in said second chamber, feeding means in said second chamber for moving said light sensitive sheet and said light insensitive transfer sheet through said developer, pressing means in said second chamber on the exit side of said developer for pressing said sheets against each other as they leave the developer, controlling means in said second chamber for controlling the operation of said various means in proper timed relation, a fan associated with said first chamber for producing an air flow through said first chamber, air inlet structure and air outlet structure defined in said first chamber between which said air flow takes place, said exposing means including a lamp in said first chamber in heat exchange relation with said air flow, a drying chamber for said prints associated with said second chamber and communicating therewith through an opening located adjacent the discharge side of said pressing means to receive through said opening said sheets as they are discharged from said pressing means, said outlet structure having air inlet connection to said drying chamber at a point remote from said opening

whereby air heated by said lamp is discharged into said drying chamber with the flow of said air being counter to the discharge movement of said sheets from said pressing means and into said drying chamber.

References Cited in the file of this patent

UNITED STATES PATENTS

2,125,388	Monroe	Aug. 2, 1938
2,249,228	Rogers	July 15, 1941
2,475,973	Luboshez	July 12, 1949
2,552,251	Bornemann	May 8, 1951
2,558,858	Land	July 3, 1951
2,582,001	Bornemann	Jan. 8, 1952
2,664,801	Eisbein	Jan. 5, 1954

FOREIGN PATENTS

879,995	France	Dec. 10, 1942
269,199	Switzerland	Oct. 2, 1950