Nov. 8, 1932. J. H. NELSON 1,887,460

ADHESIVE TAPE DISPENSING MACHINE

Filed June 20, 1929 2 Sheets-Sheet 1

Fig. 1.

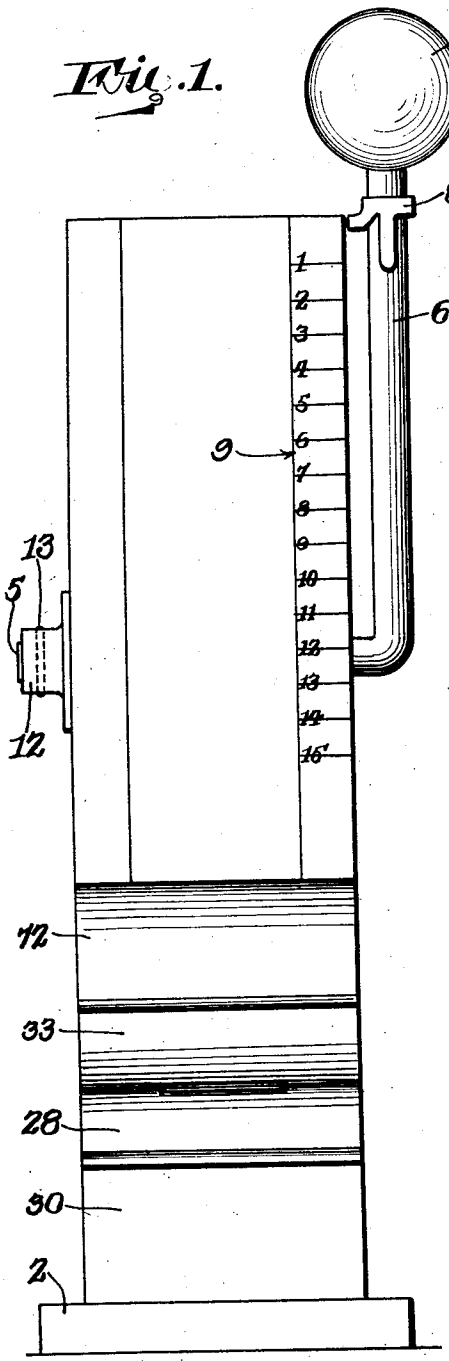

Fig. 2.

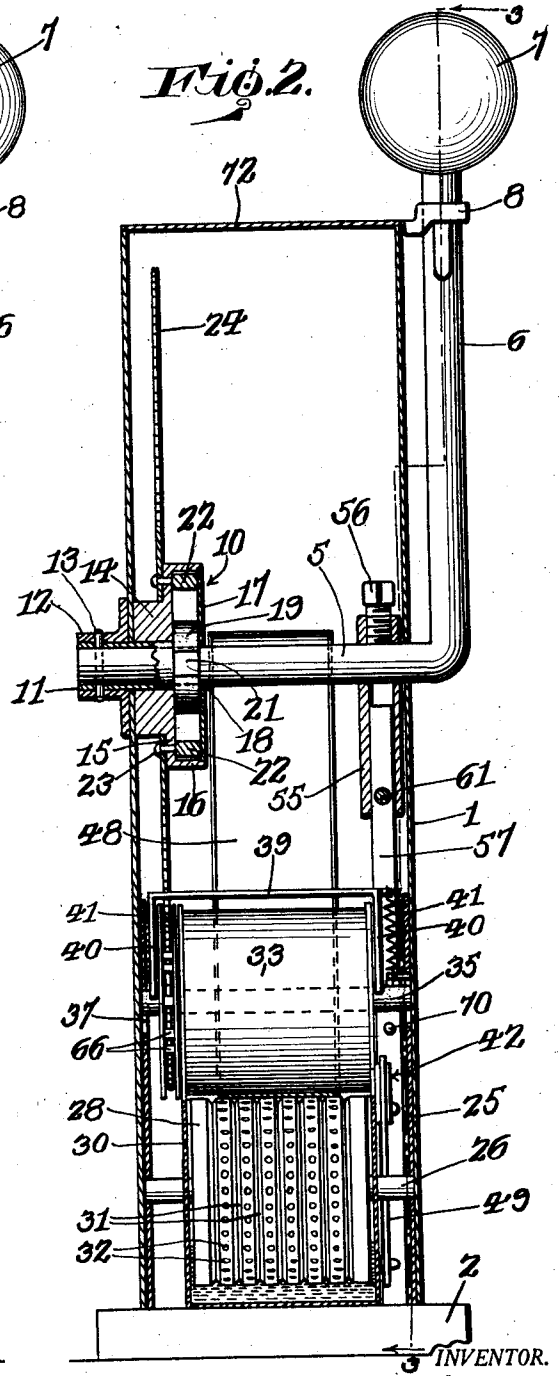

INVENTOR.
John H. Nelson,
BY
Geo. P. Kimmel
ATTORNEY.

Nov. 8, 1932. J. H. NELSON 1,887,460

ADHESIVE TAPE DISPENSING MACHINE

Filed June 20, 1929 2 Sheets-Sheet 2

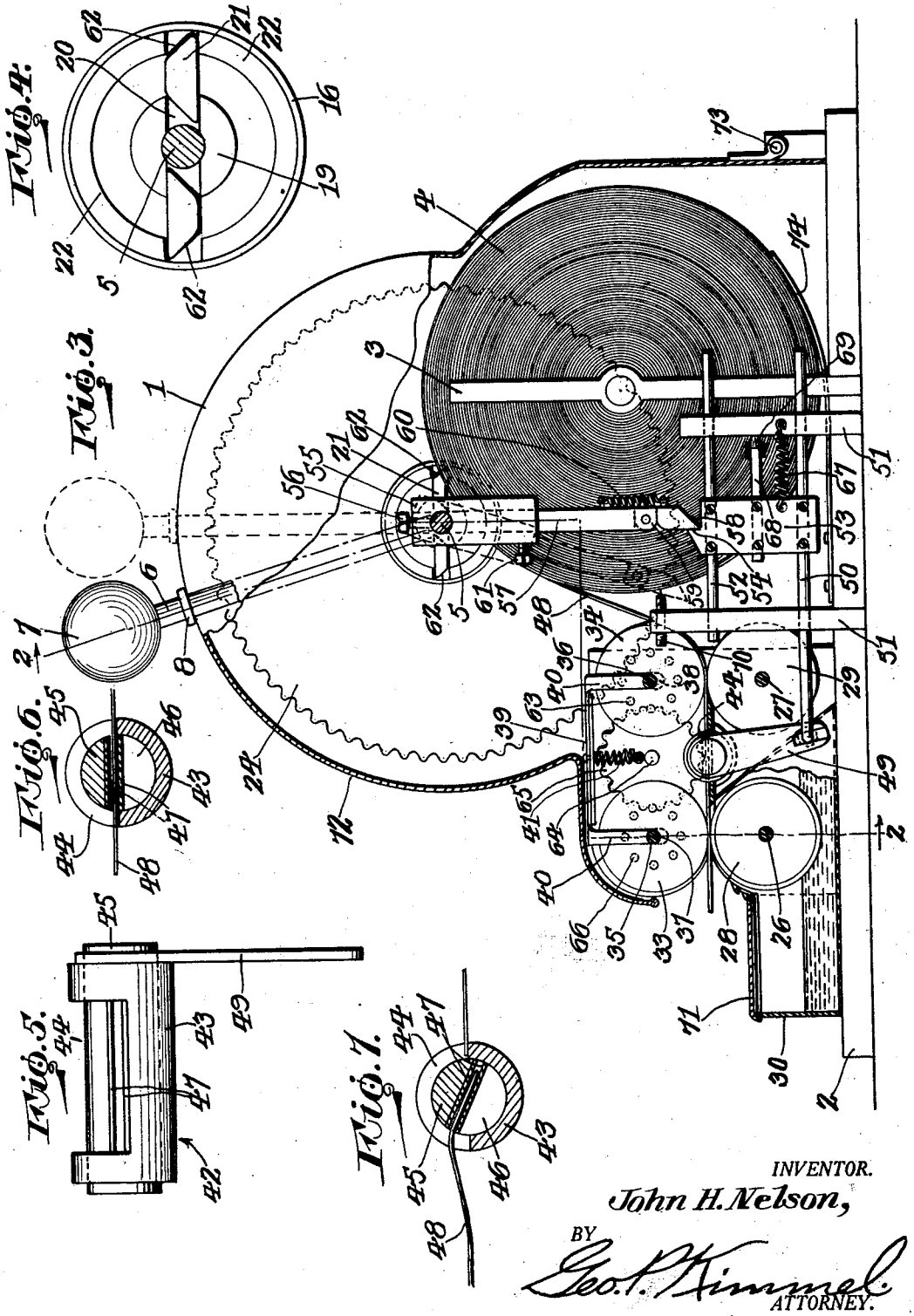

Fig. 4.

Fig. 3.

Fig. 6.

Fig. 5.

Fig. 7.

INVENTOR.
John H. Nelson,
BY
Geo. P. Kimmel.
ATTORNEY.

Patented Nov. 8, 1932 1,887,460

UNITED STATES PATENT OFFICE

JOHN H. NELSON, OF MADISON, WISCONSIN

ADHESIVE TAPE DISPENSING MACHINE

Application filed June 20, 1929. Serial No. 372,489.

This invention relates to an adhesive tape dispensing machine and has for its primary object to provide, in a manner as hereinafter set forth, a machine of such class by means of which a predetermined length of tape may be cut from a roll and ejected from the machine with the adhesive face of the tape moist.

With the foregoing and other objects in view, the invention consists of the novel construction, combination and arrangement of parts as hereinafter more particularly described, and as illustrated in the accompanying drawings wherein is shown an embodiment of the invention, but it is to be understood that the description and drawings are to be taken as illustrative and that the invention is intended to be limited only by the scope of the claim hereunto appended.

In the accompanying drawings in which like numerals are employed to designate like parts throughout the same:

Figure 1 is a front elevation of a machine constructed in accordance with this invention.

Figure 2 is a sectional elevation substantially on the line indicated at 2—2 of Figure 3.

Figure 3 is a vertical section therethrough taken on the line indicated at 3—3 of Figure 2.

Figure 4 is an enlarged elevation of the clutch mechanism with the cover plate removed.

Figure 5 is an enlarged elevation of the cutter mechanism.

Figure 6 is a transverse section through the cutter mechanism.

Figure 7 is a view similar to Figure 6, illustrating the operation of the cutter mechanism.

Referring to the drawings in detail, the numeral 1 indicates a casing mounted on a base plate 2. Extending from the base plate into the casing is a pair of posts, one of which is indicated at 3 and between which is adapted to be mounted a roll of tape 4. Extending through the sides of the casing is a shaft 5, one end of which is formed with a crank 6 preferably formed on its outer end with a knob 7. Carried by the crank 6 is an indicator 8 which is adapted to be brought into selective registry with indicia 9 on the front of the casing by manipulating the crank 6 to rotate the shaft 5.

Carried by the shaft 5 is a clutch mechanism designated generally by the numeral 10 and including a sleeve 11 which is mounted on the shaft 5 and which extends through one of the sides of the casing 1. Mounted on the sleeve 11 is a collar 12, the inner face of which abuts the outer face of the casing 1 and which is rigidly connected with the sleeve 11 and shaft 5 by means of a pin 13. Mounted on the inner end of the sleeve 11 is a hub 14 which is formed with a flange 15 terminating in a right angularly disposed, annular flange 16. The clutch mechanism is provided with a cover plate 17 which is suitably connected with the flange 16 and which is provided with a centrally disposed opening indicated at 18 for the passage of the shaft 5 therethrough.

Formed integrally with the sleeve 11 at the inner end thereof is a head 19 which projects from the shaft 5 into the space between the cover plate 17 and the hub 14. The head 19 is formed with a groove 20 which extends at right angles to the shaft 5 and within which is mounted a pair of cams 21, one of which is disposed on either side of the shaft. Disposed between the cover plate 17 and hub 14 is a pair of gripping members 22 which are of arcuate formation with their ends disposed in opposing relation and abutting the cams 21. Mounted concentrically of the hub 14 and fixedly secured to the flange 15 by means of suitable holdfast devices 23 is a relatively large gear 24.

Mounted on the base plate 2, forwardly of the roll 4, is a pair of spaced rigid plates 25 which are disposed within the casing 1, adjacent the sides of the latter. Extending between the plates 25 is a pair of spaced shafts 26 and 27, upon which is mounted a pair of rollers 28 and 29 respectively. The shaft 26 extends through the sides of a basin 30 which is mounted on the base plate 2 and is adapted to contain water. The roller 28 is formed in its periphery with a plurality of circumferentially extending grooves 31 and between the grooves 31 the roller 28 is formed in its periphery with a plurality of perforations 32.

Mounted in superposed relation to the rollers 28 and 29 is a pair of rollers 33 and 34, the shafts 35 and 36 of which extend through

slots 37 and 38 formed in the plates 25. Extending above the rollers 33 and 34 is a horizontally disposed plate 39 which is provided with a plurality of depending legs 40 secured to the shafts 35 and 36. Secured to the plate 39 and depending therefrom is a pair of springs 41, the lower ends of which are secured to the plates 25 and which operate to maintain a pressure between the rollers 33 and 34 and the lower rollers 28 and 29.

Disposed between the rollers 28, 29, 33 and 34 is a cutter mechanism designated generally by the numeral 42 which includes a stationary cylinder 43 mounted on a frame 44 extending between the plates 25. The cylinder 43 is of hollow construction and is recessed centrally thereof as indicated at 44. Rotatably mounted within the cylinder 43 and extending longitudinally therethrough is a cylinder 45 which is of solid construction and which is recessed centrally thereof as indicated at 46. The recesses 44 and 46 are oppositely disposed with respect to each other. Extending longitudinally of the cylinder 45 and disposed within the recess 46 is a pair of spaced blades 47 between which the tape 48 from the roll 4 extends.

Carried by the cylinder 45 is a crank 49 which is pivotally connected with a push bar 50 which slidably extends through a pair of uprights 51 mounted on the base plate 2. Slidably extending through the uprights 51 in parallel relation to the push bar 50 is a guide rod 52 which is connected with the push rod 50 by means of a plate 53. The upper end of the plate 53 is formed with a shoulder 54 and the upper face of the plate 53 inclines upwardly from the forward edge thereof to the shoulder 54.

Disposed within the casing is a hollow member 55 through which the shaft 5 transversely extends, the member 55 being secured to the shaft 5 to rotate therewith by means of a set screw 56. Telescoped within the member 55 is an arm 57, the lower end of which is formed with a beveled face 58. Spaced from the lower end thereof, the arm 57 is provided with a break joint 59 and extending longitudinally of the arm is a spring 60, the respective ends of which are secured to the arm on opposite sides of the break joint. The arm 57 may be adjusted longitudinally of the member 55 and secured against relative movement by means of a set screw 61.

When the roll 4 is mounted within the casing, the free end 48 of the tape is passed between the rollers 34 and 29 and into the space between the blades 47 of the cutter mechanism. When it is desired to operate the machine, the crank 6 is actuated in a forward direction from the position shown in dotted lines in Figure 3 until the indicator 8 is brought into registry with such of the indicia on the front of the casing as indicates the quantity of tape which it is desired to eject from the machine. Upon the actuation of the crank 6, the beveled outer end faces 62 of the cams 21 are brought into engagement with the ends of the gripping elements 22 causing the gripping elements to spread into frictional contact with the inner face of the flange 16. Such frictional contact causes the hub 14 to rotate carrying with it the gear 24, which moves in a counter clockwise direction as viewed in Figure 3. The teeth in the gear 24 are in mesh with a row of studs 63 projecting from one end of the roller 34 whereby the roller 34 is caused to rotate and the tape 48 is forced through the cutter mechanism to a position between the rollers 33 and 28.

Extending between the plates 25 is the shaft 64 of an idler gear 65, the teeth of which mesh with the studs 63 and also with a similar row of studs 66 projecting from one end of the roller 33 thereby providing for the rotation of the latter. Due to the frictional contact between the rollers 34 and 29, and 33 and 28, the rollers 29 and 28 are rotated simultaneously with the rollers 34 and 33. As the roller 28 is rotated a peripheral portion thereof passes through the water contained in the basin 30 and the lower face of the tape 48 is moistened by the contact of the roller 28 therewith. When the crank 6 is actuated as above stated the arm 57 is swung in a rearward arc and when the beveled face 58 is brought into contact with the inclined upper face of the plate 53, the break joint 59 opens against the tension of the spring 60 and permits the beveled face 58 to ride over the inclined face of the plate 53 and drop behind the shoulder 54.

Upon the actuation of the crank 6 in a rearward direction to return the same to its normal position, the plate 53 is moved forwardly by the arm 57 thereby moving the push rod 50 in a forward direction to operate the crank 49 whereby the cylinder 45 is rotated relative to the cylinder 43 and the tape 48 is cut by the rearward edges of the blades 47. When the plate 53 has moved forwardly a sufficient distance to clear the arc described by the lower end of the arm 57, the latter will clear the shoulder 54 and the plate 53 is returned to its normal position by means of a spring 67, the respective ends of which are secured to the plate 53 and the rearmost of the uprights 51. Extending rearwardly from the plate 53 is a bumper 68 which coacts with a cushion element 69 carried by the rearmost plate 51 to absorb shock to the plate 53 at the end of its return movement.

In Figure 3 of the drawings, the crank 6 and arm 57 are shown in full lines in position just prior to the cutting movement after the crank has been moved a sufficient distance to bring the indicator 8 into registry with the first unit of the indicia 9. In Figure 3, the crank 6 and arm 57 are shown in

dotted lines in their normal positions prior to the measuring and ejecting movements. In normal position, the arm 57 abuts a pin 70 extending through the foremost of the uprights 51 and by manipulation of the pin 70 the normal position of the crank 6 may be adjusted as desired.

Preferably a cover 71 is provided for the basin 30 and the cover portion 72 of the casing 1 is hinged as indicated at 73 to permit the cover portion 72 to be swung open when it is desired to have access to the interior of the casing for changing the roll or the like. A leaf spring 74 is secured to the base plate 2 and abuts the roll 4 to firmly hold the tape in position thereon.

It is thought that the many advantages of an adhesive tape dispensing machine in accordance with this invention will be readily apparent, and although the preferred embodiment of the invention is as illustrated and described, it is to be understood that changes in the size, shape and arrangement of parts may be resorted to, so long as such changes fall within the scope of the invention as defined in the appended claim.

What I claim is:

A tape dispensing machine comprising, means for rotatably mounting a roll of tape, mechanism for feeding the tape from the roll and ejecting the same from the machine, and a cutter mechanism to cut the tape, said cutting mechanism including a stationary hollow cylinder formed with a recess, a solid cylinder rotatably mounted within the hollow cylinder and formed with a recess oppositely disposed with respect to the recess in the hollow cylinder, said recesses overlapping each other in order that the tape may be passed transversely through the cylinders, a pair of spaced blades within the recess in the solid cylinder for the passage of the tape therebetween, and means operatively connecting the crank with the solid cylinder to provide for the rotation of the latter.

In testimony whereof, I affix my signature hereto.

JOHN H. NELSON.