No. 891,105. PATENTED JUNE 16, 1908.

M. SCHWARZ.

NON-REFILLABLE BOTTLE.

APPLICATION FILED JAN. 29, 1908.

Fig. 1.

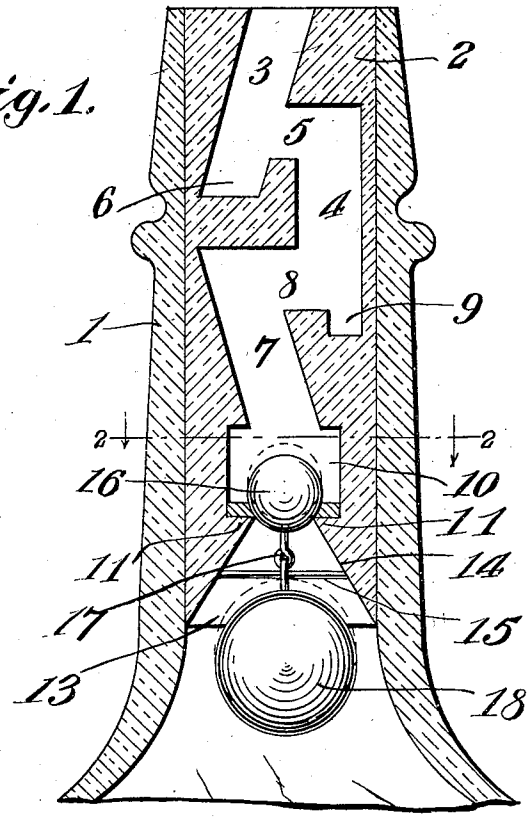

Fig. 2.

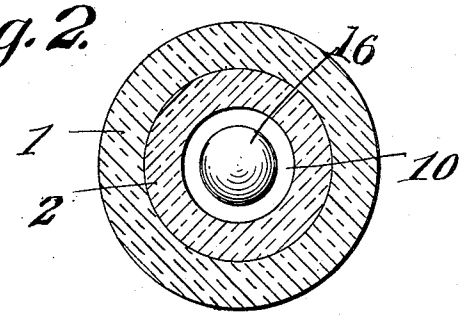

Inventor,
Max Schwarz.

Witnesses:—
Joe. P. Wahler,
P. M. Smith.

By Victor J. Evans,
Attorney.

THE NORRIS PETERS CO., WASHINGTON, D. C.

UNITED STATES PATENT OFFICE.

MAXIMILIAN SCHWARZ, OF CHAMBERSBURG, PENNSYLVANIA.

NON-REFILLABLE BOTTLE.

No. 891,105. Specification of Letters Patent. Patented June 16, 1908.

Application filed January 29, 1908. Serial No. 413,222.

To all whom it may concern:

Be it known that I, MAXIMILIAN SCHWARZ, a citizen of the United States, residing at Chambersburg, in the county of Franklin and State of Pennsylvania, have invented new and useful Improvements in Non-Refillable Bottles, of which the following is a specification.

This invention relates to non-refillable bottles, the object in view being to provide a bottle having a nozzle-form of core and valve by means of which the proper seating and unseating of the valve is obtained and the insertion of a valve unseating wire or other device absolutely prevented.

With the above general object in view, the invention consists in the novel construction, combination and arrangement of parts herein fully described, illustrated and claimed.

In the accompanying drawing:—Figure 1 is a vertical sectional view through the neck of a bottle illustrating the present invention. Fig. 2 is a horizontal section through the same on the line 2—2 of Fig. 1.

Referring to the drawing, 1 designates the neck of a bottle, the internal bore of which is preferably cylindrical while 2 designates a core preferably formed of glass or other hard frangible material, the same fitting snugly in the neck and extending a suitable distance downward therein, the said core preferably terminating flush at its upper end with the top edge of the neck as shown in Fig. 1.

The core 2 is permanently fastened in the neck of the bottle as by cementing the same therein, whereby the removal of said core is made impossible without breaking the bottle. The passage for the liquid extending through the core from end to end is of tortuous or irregular form. The initial portion 3 of the bore or passage is inclined as clearly shown at the top of Fig. 1, the upper end thereof being open to receive a suitable cork or stopper. The secondary or intermediate portion of the bore which is indicated at 4 is preferably straight and extends lengthwise of the core and communicates with the initial portion 3 by means of a lateral and substantial horizontal port 5. This port is at an intermediate point in the length of the initial bore 3, which leaves a trap 6, adapted to receive and arrest the insertion of a wire or other implement used in attempting to unseat the valve hereinafter described.

The third or final portion 7 of the bore or passage is inclined at a reverse angle to the initial portion 3 and communicates with the secondary or intermediate bore 4 by a substantially horizontal port or opening 8 which enters the bore 4 above the bottom of the latter thereby leaving a second trap 9 having the same purpose and function as the trap 6 above referred to.

The lower end of the bore 7 communicates with a valve chamber 10, the lower end of which is partially closed by means of an annular shoulder 11 which forms the valve seat and which is preferably faced on its upper side with a washer 12 preferably of some soft, flexible material. Extending from the valve seat downward, is a conical or bell-shaped recess 13 defined by a corresponding conical wall 14 the purpose of which will hereinafter appear.

15 designates a stop in the form of a wire or bar extending diametrically across the recess 13.

The valve 16 is spherical and is provided with a link 17 which extends downward and connects with a valve seating element 18 which is also preferably spherical and of larger diameter than the valve 16. The arrangement of the valve, the valve seat, the valve seating element, the conical wall and the stop 15 is such that when the bottle is inverted, the valve 16 will leave its seat far enough to permit the contents of the bottle to be poured out. When the bottle is set upright, the valve will be drawn against its seat by the element 18. When the bottle is laid on its side, the sphere 18 will ride against the conical or inclined wall 14 and thereby draw the valve up snugly against its seat. This makes it practically impossible to refill the bottle. The stop 15 prevents the sphere 18 from moving upward far enough to close the recess 13.

Having thus described the invention, I claim as new:—

The combination with a bottle neck, of a core permanently fastened therein and em-

bodying a tortuous liquid passage terminating in a conical recess in the inner end of the core, a valve seat within said core, a spherical valve, a link projecting from said valve, a valve seating element connected to said link, and a stop located in said recess to limit the movement of the valve seating element.

In testimony whereof I affix my signature in presence of two witnesses.

MAX SCHWARZ.

Witnesses:
W. D. HAYS,
JNO. D. SCHAAL.