(No Model.) 2 Sheets—Sheet 1.

# H. BARDSLEY.

## SHUTTLE BOX OPERATING MECHANISM FOR LOOMS.

No. 590,383. Patented Sept. 21, 1897.

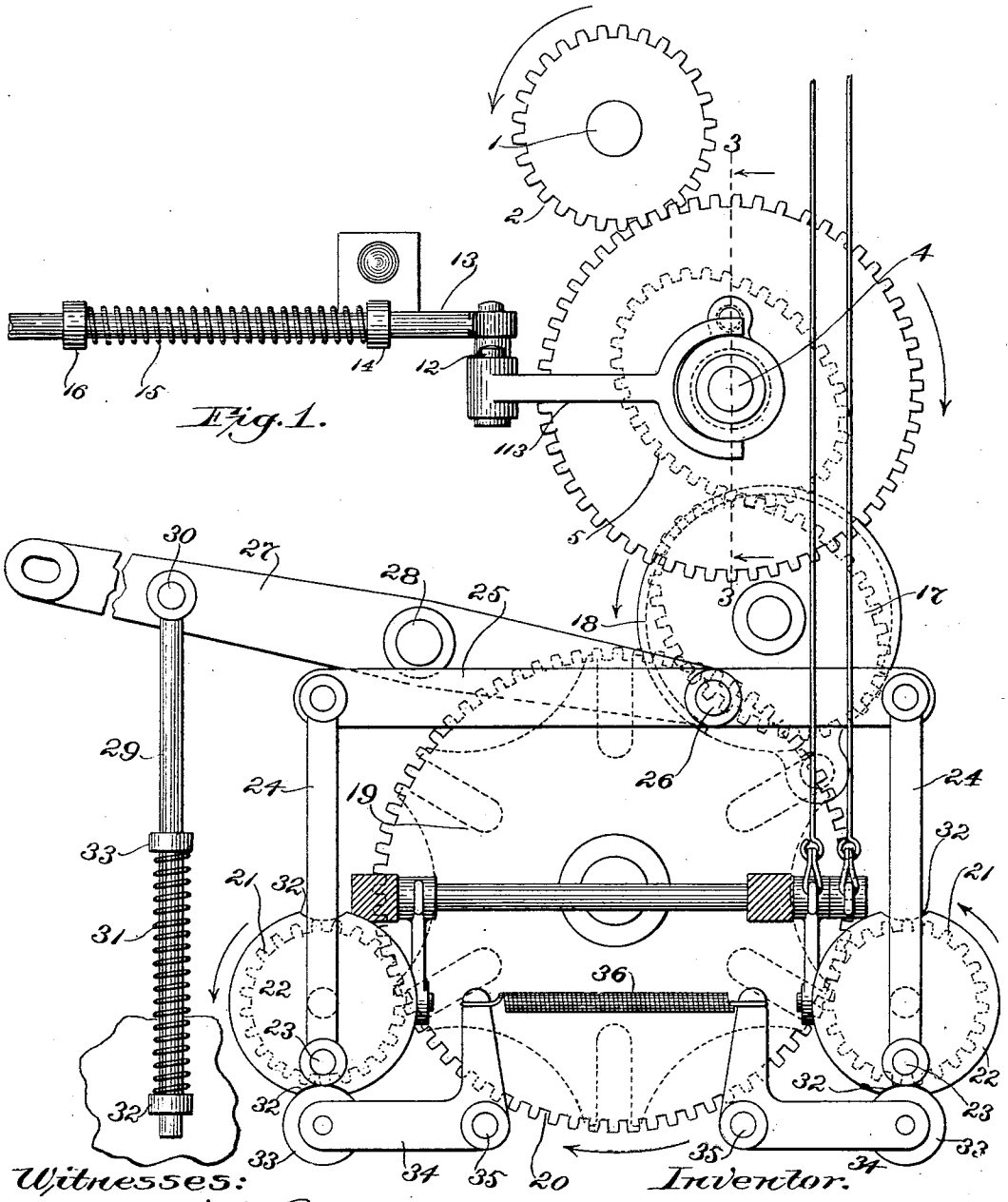


Fig. 1.

Witnesses:
Arthur F. Randall
Oscar F. Hill

Inventor.
Henry Bardsley.
by Macleod Calver & Randall
Attorneys.

THE NORRIS PETERS CO., PHOTO-LITHO., WASHINGTON, D. C.

(No Model.) 2 Sheets—Sheet 2.

# H. BARDSLEY.

## SHUTTLE BOX OPERATING MECHANISM FOR LOOMS.

No. 590,383. Patented Sept. 21, 1897.

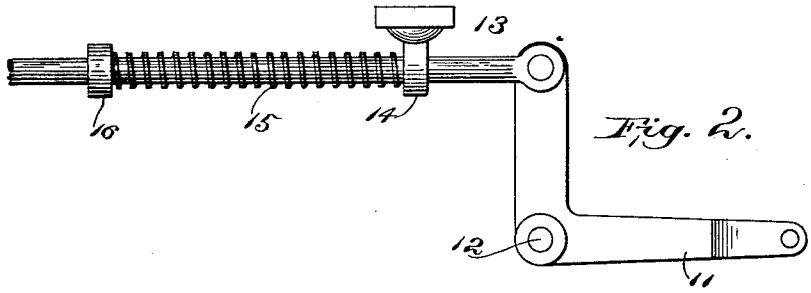


Fig. 2.

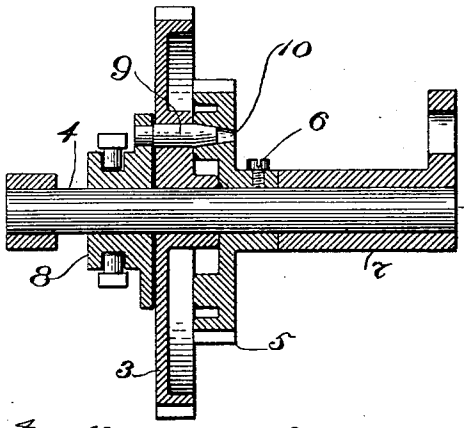


Fig. 3.

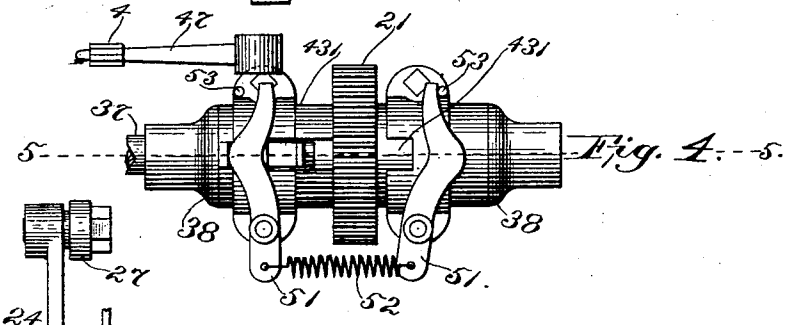


Fig. 4.

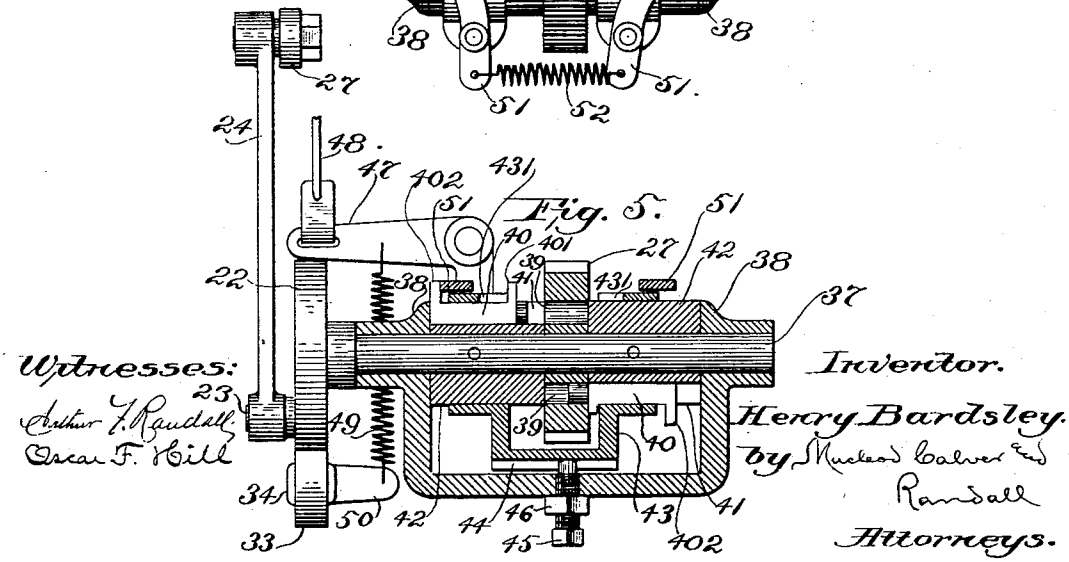


Fig. 5.

Witnesses:
Arthur T. Randall
Oscar F. Hill

Inventor.
Henry Bardsley.
by Mudge Calver & Randall
Attorneys.

THE NORRIS PETERS CO., PHOTO-LITHO., WASHINGTON, D. C.

# UNITED STATES PATENT OFFICE.

HENRY BARDSLEY, OF PROVIDENCE, RHODE ISLAND, ASSIGNOR TO THE KNOWLES LOOM WORKS, OF WORCESTER, MASSACHUSETTS.

## SHUTTLE-BOX-OPERATING MECHANISM FOR LOOMS.

SPECIFICATION forming part of Letters Patent No. 590,383, dated September 21, 1897.

Application filed February 4, 1897. Serial No. 621,911. (No model.)

*To all whom it may concern:*

Be it known that I, HENRY BARDSLEY, a citizen of the United States, residing at Providence, in the county of Providence and State of Rhode Island, have invented certain new and useful Improvements in Shuttle-Box-Operating Mechanism for Looms, of which the following is a specification, reference being had therein to the accompanying drawings.

The invention will be described first with reference to the accompanying drawings, after which the distinguishing characteristics thereof will be more particularly pointed out and distinctly defined in the claims at the close of this specification.

Figure 1 of the accompanying drawings is a view in side elevation representing certain mechanism pertaining to a loom, said mechanism embodying my present improvement. Fig. 2 is a detail view showing in plan certain parts of the clutch-operating devices which are described hereinafter. Fig. 3 is a view in vertical section on the dotted line 3 3 of Fig. 1, looking in the direction indicated by the arrows which are adjacent to the ends of the said line. Fig. 4 is a view showing in plan one of the box-operating pinions which are described hereinafter and certain of the connections thereof which are involved in the actuation of the said pinion. Fig. 5 is a view in section on the line 5 5 of Fig. 4, showing, in addition to the devices of Fig. 4 and in elevation, certain of the connections through which motion is transmitted to the shuttle-boxes of a loom.

1 is a rotating shaft of a loom. It may be and in practice preferably will be the loom crank-shaft.

2 is a gear on the shaft 1.

3 is a large gear with which gear 2 engages. Gear 3 is mounted upon a shaft 4, Figs. 1 and 3, and at the side thereof is located the gear 5. The gear 3 is loose upon the said shaft, while gear 5 is fast thereon, being connected therewith in some suitable manner—as, for example, by means of the clamping-screw 6, which is shown in Fig. 3. Shaft 4 is mounted to turn in a bearing at 7, Fig. 3, which is mounted upon and suitably attached to the loom-framing. (Not shown.) For the purpose of coupling the gear 3 to the gear 5 in order to cause the two to rotate in unison and thereby transmit to the parts hereinafter described which are operated from the gear 5 the motion which is communicated from crank-shaft 1 to the gear 3 I provide means of clutching the said loose gear 3 to the gear 5. Any means suitable for the purpose may be employed. I have represented in Figs. 1 and 3 a hub 8, mounted loosely upon the shaft 4 at one side of gear 3 and free to move upon the said shaft toward and from the gear. This hub carries a pin 9, which latter passes through a hole in gear 3. When the hub is moved close against gear 3, the free end of the said pin projects on the opposite side of the said gear and enters a hole 10 in the gear 5. (See Fig. 3.) Thereby the gears 3 and 5 are caused to rotate in unison. Hub 8 is grooved, as shown in Fig. 3, to receive pins carried by the forked end of one arm of a bell-crank 11, which latter is pivoted, as at 12, to swing horizontally upon a suitable support. The other arm of the said bell-crank has connected thereto the actuating-rod 13, which latter is mounted in a guide 14, through which it is fitted to slide, it having thereon a spiral spring 15, the said spring being compressed between the guide 14 and a collar 16 on the rod, so as that it tends normally to push the rod to the left in the drawings and thereby maintain the gears 3 and 5 clutched to each other. By pressing the rod 13 toward the right in the drawings, which may be effected through power applied by hand or otherwise and through any suitable connections, the clutch-hub 8 is moved so as to unclutch gear 3 from gear 5. The box-operating mechanism is operated from the gear 5, through the devices and connections which are about to be described, so as that after the unclutching operation aforesaid has been performed the shuttle-box-operating mechanism is entirely independent from the rest of the loom. The crank-shaft may be turned, then, in either direction by hand or power, as required, without moving the said mechanism, and also the latter may be adjusted and worked by hand as may be necessary.

Gear 5 meshes with gear 17, (see Fig. 1,) which latter rotates in unison with a pin-

wheel 18. The pin of the said pin-wheel works in the slots of a star-wheel 19, (shown in dotted lines in Fig. 1,) the said star-wheel rotating in unison with the large master-gear 20, which last constitutes a moving toothed surface for the actuation of the crank-operating pinions 21 21. Gears 5 and 17 are by preference made elliptical, as indicated in dotted lines in Fig. 1, and the major and minor axes of the ellipses are disposed as shown so as that the speed of rotation of the pin-wheel 18 is diminished while the pin thereof is within a slot of the star-wheel 19. When the said pin enters the outer end of the slot, the speed of rotation of the pin is diminishing, and it continues to diminish as the pin-wheel rotates and the pin travels radially inward along the slot toward the center of the star-wheel. As the pin travels radially outward again in the said slot the speed of rotation of the pin-wheel gradually increases. In this manner I counteract the tendency of the pin to augment the speed of rotation of the star-wheel and gear 20, which is connected therewith, in proportion as the pin approaches the center of the star-wheel. Ordinarily this augmentation takes place with the result that too great a speed is generated in the rotation of the box-operating pinions and parts connected therewith, this resulting in too great momentum and in overrunning as well as frequent breakage of parts.

In connection with each of the box-operating pinions 21 I employ a disk 22, having applied thereto a crank-pin 23. Each of the said crank-pins 23 (see Fig. 1) has applied thereto one end of a connecting-rod 24, the other end of which latter is joined pivotally to a balance-lever 25, one of the said connecting-rods being connected with one end of the said balance-lever 25, while the other thereof is connected with the opposite end of the said balance-lever. The said balance-lever 25 is pivoted at 26, as shown in Fig. 1, to the box-actuating lever 27, the latter being pivoted at 28, and being in practice connected with the shuttle-boxes by devices of ordinary character, which will be understood by all those who are skilled in the art. I have deemed the illustration of the shuttle-boxes and of the connecting devices aforesaid to be unnecessary.

At 29 is a rod that is pivoted to the box-operating lever 27 at 30, the said rod having applied thereto a spiral spring 31, which is compressed between the fixed portion or guide 32 on the framework and a collar 33 on the said rod 29, the said spring assisting in supporting a part of the weight which is necessary to be moved by the box-operating lever 27.

As usual in box-operating mechanism for looms the crank-disks 22 22 are intended to be rotated at intervals, as may be required, in order to effect the changes of the shuttle-boxes at the proper times. To this end they are operatively connected with the pinions 21 21 only at the times at which movement thereof needs to occur, and they remain stationary at all other times. Each movement of a crank-disk is through a semirevolution, and for the purpose of preventing the said crank-disks from being moved accidentally out of the positions in which they are left at the ends of their movements of semirevolution, at such times as they are free and liable to become jarred from the desired positions, I provide each of the said crank-disks with suitable detent devices. I have shown an ordinary form of detent devices in the drawings. Thus, reference being had more particularly to Figs. 1 and 5, the periphery of each crank-disk 22 is notched at diametrically opposite points, as at 32 32, the said notches being fitted to receive the periphery of a roll 33, which latter is journaled on a bell-crank 34, the latter being pivoted to a fixed part of the framework at 35. The upwardly-extending arms of the two bell-cranks 34 34 are connected together by a spring 36, the said spring acting to hold the rollers 33 33 pressed into the notches in the crank-disks 22 22, which for the time being are in position to receive the said rollers.

In the illustrated embodiment of the invention each crank-disk is fixed upon the outer end of a shaft 37. (See more particularly Figs. 4 and 5.) The corresponding pinion 21 is mounted to turn loosely upon the said shaft 37 at a point intermediate the bearings 38 38 for the latter. Holes 39 39 are made through the body of each of the pinions 21 at diametrically opposite points, as shown clearly in Fig. 5, these holes being fitted to receive the projecting ends of sliding keys 40 40, which are mounted in grooves 41, that are formed in the sleeves 42 42. The grooves and keys of the sleeves are on diametrically opposite sides of the respective sleeves. The said sleeves are pinned or otherwise made fast to the shaft 37 on opposite sides of the pinion 21. When in the operation of the mechanism the inner end of one of the sliding keys 40 is caused to enter one of the holes 39 in the pinion 21, the said pinion will be coupled to the shaft 37, so as to compel the said shaft to rotate in unison with the said pinion. The next movement of partial revolution of the master-gear 20, which is occasioned by the engagement of the pin of the pin-wheel 18 with the star-wheel 19, will produce a semirevolution of the pinion 21 and of the crank-disk 22, which is connected therewith. After this the master-gear and both pinions 21 21 will remain stationary long enough to afford ample opportunity for any movement of the sliding keys 40 40 which may be required in the working of the shuttle-boxes. The keys 40 40 are under the control of a yoke 43, which latter is grooved or slotted longitudinally, as at 44, to receive the inner end of a screw 45, the said screw being provided with a lock-nut 46 and serving as a means of guiding the yoke 43 in its movement lengthwise of shaft 37 and restraining the said yoke from movement of ro-

tation. The said yoke is shaped as shown most clearly in Figs. 4 and 5, it having bearing portions at opposite sides of the pinion 21 within which the sleeves 42 42 rotate and a connecting portion which joins the said bearing portions. Each of the sliding keys 40 has outwardly-projecting lugs 401 402 at the opposite ends thereof, and the said lugs are engaged by the said bearing portions of the yoke to determine the position of the keys. Each yoke 43 is operatively connected with a bell-crank 47, the latter having applied thereto connections 48, extending to the usual pattern devices, by means of which it is customary to control the working of the shuttle-box-operating mechanism of a loom. I have not deemed it necessary to represent such pattern devices or to describe the same further than to state that they are provided with fingers or levers which are moved by means of indicators on the pattern chain or surface, the movement of the fingers or levers aforesaid being transmitted through the connections 48 to the bell-cranks 47 47 and thereby being transmitted to the sliding yokes 43 43. The action of the indicators is to raise the horizontal arms of the bell-cranks 47 47 and to slide the yokes 43 to the left in Figs. 4 and 5 of the drawings. For the purpose of moving the bell-cranks and yokes in the oppsite direction I connect with the horizontal arm of each bell-crank a spring 49, the latter being also connected with a fixed portion of the framework, as 50, in Fig. 5.

Each bearing portion of a yoke 43—as, for example, at the top in Figs. 4 and 5—is notched, as at 431, the notch being of sufficient size to receive the projection 401 at the inner end of a sliding key 40 and also to permit movement of such key away from pinion 21 sufficient in extent to disengage completely the inner end of the key from the said pinion. To the bearing portions of the yoke are pivoted disengaging-levers 51 51, Figs. 4 and 5, which are spring operated, so as to cause the long arms thereof to bear outwardly away from both sides of pinion 21. I have shown these levers as having their short arms connected to each other by the spring 52. Stop-pins 53 53 on the bearing portions of the yoke prevent the long arms of the said disengaging-levers from being swung out too far. These disengaging-levers act upon the outer projections 402 402 of the sliding keys as pinion 21 rotates, and as each key in turn comes opposite a notch 431 it is borne outwardly by the corresponding disengaging-lever, its inner end being withdrawn from the hole 39 in the pinion in which it was located, and its projection 401 entering the notch 431, thereby unclutching the pinion 21 from the shaft 37 and holding the latter locked fast so long as the projection remains in the notch. The retracting movement of the key is arrested by the outer end of the key striking against the adjacent bearing 38.

The working of the devices shown in Figs. 4 and 5 is as follows: The said figures show the yoke as having been moved endwise to the left, as by the action of an indicator on the pattern-chain. As shown, this movement of the yoke has carried the inner end of one key 40 into a hole in the pinion 21 and also has unlocked the other key by withdrawing the notch 431 therefrom. This clutches the shaft 37 and pinion 21 together by means of one key and unlocks the other key from the yoke, so as thereby to leave the parts in readiness to rotate whenever pinion 21 shall be actuated by the master-gear 20. When next the pinion is rotated through a semirevolution through the action of its operating devices, the shaft 37 and parts connected therewith also make a semirevolution. At the end of such semirevolution the key at the left in Fig. 5 is diametrically opposite its present position, while the key at the right is on top in such figure. As the latter key is carried around it approaches the notch 431 at the right in Figs. 4 and 5. When near said notch, the projection 402 of such key begins to bear against the outer edge of the right-hand disengaging-lever 51, which latter acts as soon as the notch is reached to force the key outwardly, carrying projection 401 into the notch, thereby locking the parts fast and preventing the crank-disk and connected parts from overrunning. The parts remain locked in the position which thus has been given them until the pattern-controlling devices occasion a movement of the yoke to the right. This produces a repetition of the action above set forth—namely, it carries the left-hand key inward toward the pinion 21, so as to cause its inner end to enter the hole 39 in the said pinion which at the time being is lowest. It also carries the notched portion 431 at the right away from the right-hand key, the latter being at that time uppermost, so as to unlock the devices and leave them free to be rotated when next the pinion and star-wheel connections of the master-gear communicate movement to the said master-gear. As will be apparent, the key which for the time being is uppermost is the one which is engaged by a notched portion of the yoke to lock the parts from being rotated, either accidentally or otherwise, while the key which is lowermost is the one which at the movement of the yoke that is dictated by the pattern-controlling devices is caused to enter a hole of the pinion 21, so as to clutch the said pinion to the shaft of the crank-disk.

Having described my invention and disclosed the principle thereof, I claim—

1. The combination with a driving-shaft in a loom, a master-gear, and box-operating devices including pinions which are rotated by the said master-gear, a star-wheel for rotating said master-gear, a pin-wheel for engagement with the said star-wheel, and transmitting-gearing for driving said pin-wheel from the driving-shaft, the said gearing embracing elliptical wheels whereby the speed of the pin-

wheel is decreased while the pin thereof is in a slot of the star-wheel in order to equalize the motion of the master-gear, substantially as set forth.

2. In combination, two rotatable parts, means to rotate one of such parts, motion-transmitting connections leading from the other of such parts, oppositely-placed movable clutch-keys carried by one of such parts and engaging with the other part, the yoke by which the clutch-keys are engaged and whereby they are shifted to occasion engagement of such keys with the latter part alternately as desired, devices to operate the said yoke and means to occasion disengagement of the engaged key after the desired movement of rotation has been communicated to the driven part, substantially as set forth.

3. In combination, two rotatable parts, means to rotate one of such parts, motion-transmitting connections leading from the other of such parts, oppositely-placed movable clutch-keys carried by one of such parts and engaging with the other part, the yoke by which the clutch-keys are engaged and whereby they are shifted to occasion engagement of such keys with the latter part alternately as desired, and means to occasion disengagement of the engaged key after the desired movement of rotation has been communicated to the driven part, the said yoke locking with the said keys at the ends of the successive movements to prevent overrunning of the driven part, substantially as described.

4. In combination, a moving toothed surface, a pinion 21 in engagement therewith, a shaft 37, sleeves 42 applied to the said shaft, keys 40, 40 applied to the said sleeves, a sliding yoke 43 to actuate the said keys, the said yoke having notches 431, 431, for coöperation with the said keys, means to move the said yoke, and yielding disengaging-arms 51, 51, for disengaging the keys from the pinion and causing them to enter the notches, substantially as set forth.

In testimony whereof I affix my signature in presence of two witnesses.

HENRY BARDSLEY.

Witnesses:
CHAS. F. RANDALL,
EDITH J. ANDERSON.