(12) UK Patent Application (19) GB (11) 2 276 751 (13) A

(43) Date of A Publication 05.10.1994

(21) Application No 9306838.5

(22) Date of Filing 01.04.1993

(71) Applicant(s)
Recon Limited

(Incorporated in Hong Kong)

19th Floor, Kwong Fat Hong Building, Rumsey Street, Central, Hong Kong

(72) Inventor(s)
Chi Kin Tang

(74) Agent and/or Address for Service
Marks & Clerk
57-60 Lincoln's Inn Fields, LONDON, WC2A 3LS, United Kingdom

(51) INT CL^5
G09F 13/18 , G02F 1/1335

(52) UK CL (Edition M)
G5C CA342 CEK CHX
U1S S2199

(56) Documents Cited
GB 0888255 A **EP 0520623 A1** **EP 0377309 A2**
US 4909604 A **US 2297851 A**

(58) Field of Search
UK CL (Edition M) **G5C CEK CHX**
INT CL^5 **G02F 1/1335 , G09F 13/18**

(54) Illuminating displays

(57) To illuminate a display 11 an illuminator 12 of transparent or translucent material is provided which has one or more light sources 15 such as LEDs at its periphery. The illuminator 12 has a planar side facing the display and a parabolic side facing away from the display which side is also be provided with a light colour coating. The display may be a liquid crystal or comprise opaque elements mounted in front of the illuminator 12. The illuminator 12 may be rectangular or circular in plan and the display may used in a timepiece.

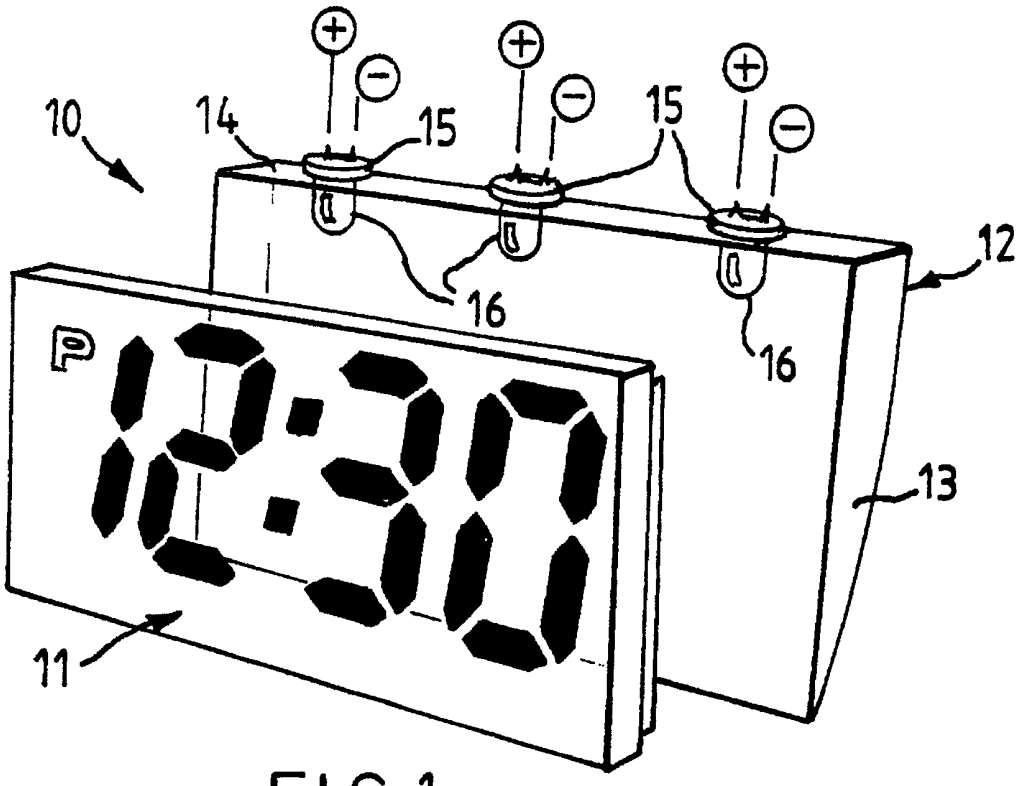

FIG.1

At least one drawing originally filed was informal and the print reproduced here is taken from a later filed formal copy.

The print reflects an assignment of the application under the provisions of Section 30 of the Patents Act 1977.

GB 2 276 751 A

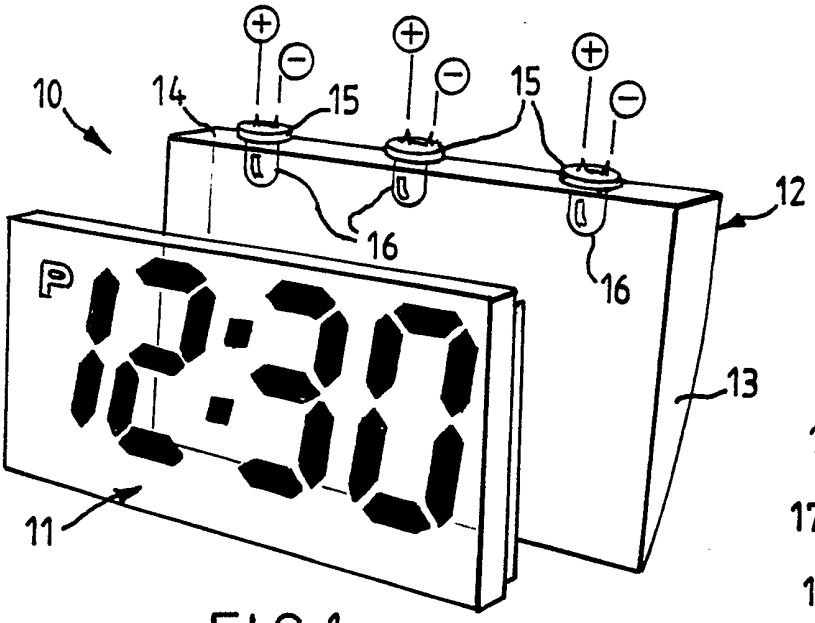

FIG.1

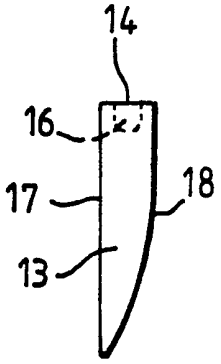

FIG.2

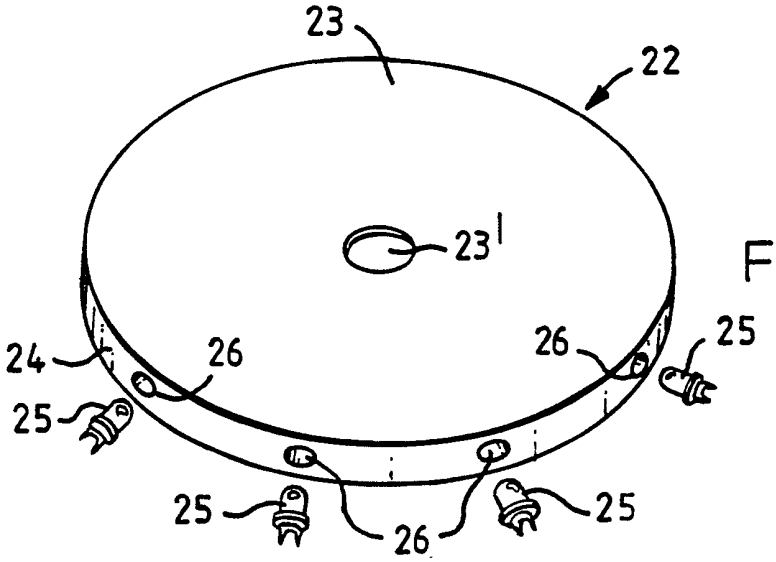

FIG.3

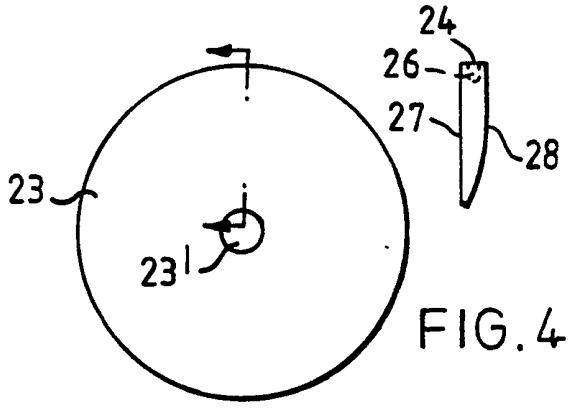

FIG.4

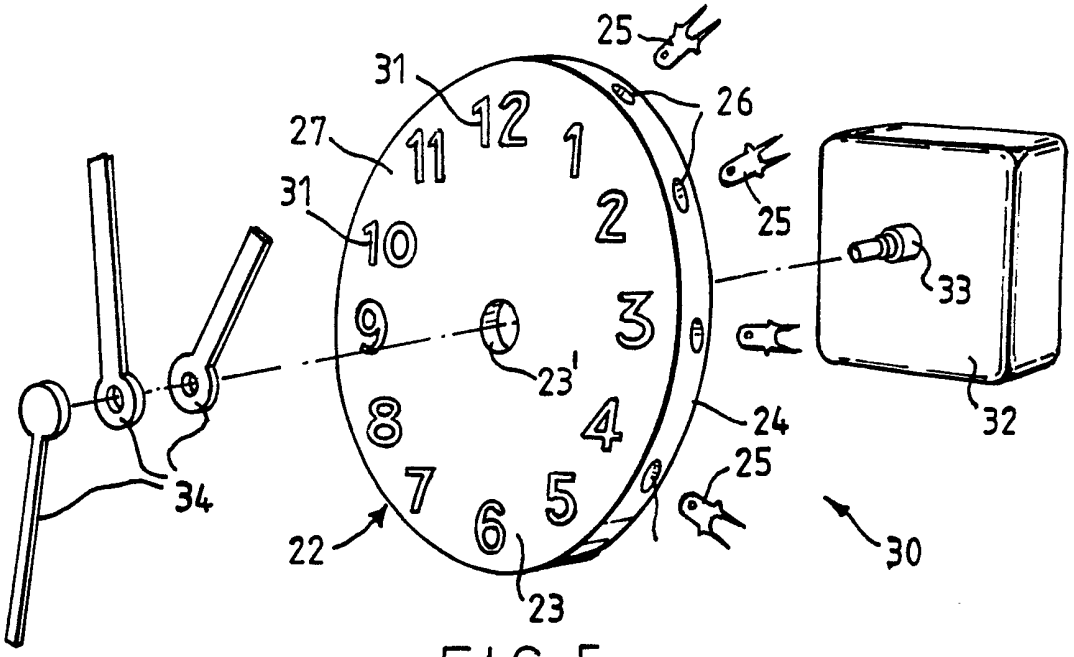
25
31
26
27
12
1
11
2
31
10
25
33
9
3
23'
24
32
8
4
25
34
7
5
6
22
23
30

FIG.5

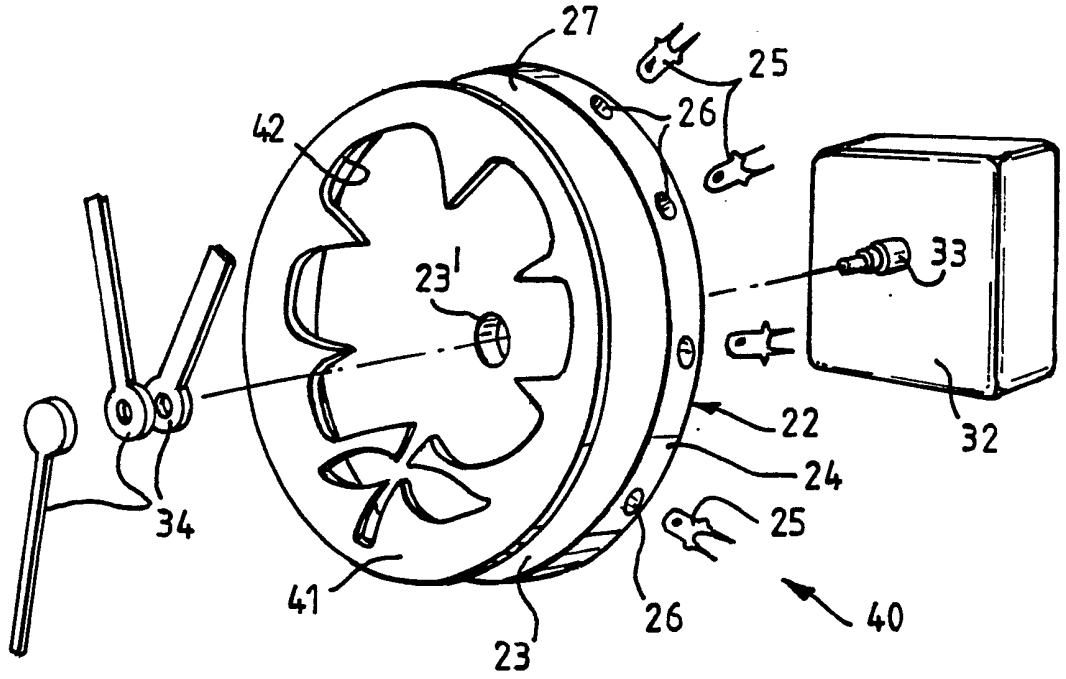
27
25
26
42
33
23'
22
32
24
34
25
41
26
23
40

FIG.6

DISPLAY MODULE

The present invention relates to a display module.

According to the invention, there is a display module which comprises a display and an illuminator provided behind the display, said illuminator being formed by a body of a transparent or translucent material and a light generator provided at the periphery of the body such that light from the light generator is arranged to enter into the body for the illuminator to provide back-light to facilitate reading of the display.

Preferably, the body has a cross-section converging in a direction away from the light generator in order to render the intensity of the back-light provided by the illuminator substantially uniform.

More preferably, the body has a substantially planar front side and a curved rear side.

In a preferred embodiment, the rear side of the body is substantially parabolic.

The display module may further include blocking means which is provided on the rear side of the body in order to avoid or to at least minimise escape of light through the rear

side.

Advantageously, the rear side of the body is provided with a light colour painting or coating.

It is preferred that the light generator is located within the periphery of the body.

Preferably, the light generator is provided by at least one light-emitting diode.

In a first embodiment, the body is provided by a substantially rectangular plate, and the light generator is provided along one peripheral side of the plate.

In a second embodiment, the body is provided by a substantially circular plate, and the light generator is provided around the periphery of the plate.

In a specific construction, the display is provided by a liquid crystal display. In a different construction, the display is provided by opaque element or elements provided on and/or in front of the illuminator.

The invention will now be more particularly described, by way of example only, with reference to the accompanying drawings, in which:

Figure 1 is an exploded front perspective view of a first embodiment of a display module in accordance with the invention, said display module having a rear illuminator;

Figure 2 is a sectional side view of a body of the illuminator of Figure 1;

Figure 3 is a front perspective view of an illuminator of a second embodiment of a display module in accordance with the invention;

Figure 4 shows the radial cross-section of a body of the illuminator of Figure 3;

Figure 5 is an exploded front perspective view of a third embodiment of a display module in accordance with the invention; and

Figure 6 is an exploded front perspective view of a fourth embodiment of a display module in accordance with the invention.

Referring initially to Figures 1 and 2 of the drawings, there is shown a first display module 10 embodying the invention, which display module 10 is formed by a front liquid crystal display or LCD display 11 and a rear illuminator 12. The LCD display 11 is rectangular and of a generally known type for displaying digital time. The

illuminator 12 is also rectangular corresponding to the LCD display 11 and located behind the LCD display 11.

The illuminator 12 has a body plate 13 of a transparent or translucent material, such as acrylic plastics, and three light-emitting diodes 15. The light-emitting diodes 15 are located in corresponding blind holes 16 provided at equal intervals in top side 14 of the body plate 13. As best shown in Figure 2, the body plate 13 has a planar front side 17 and a curved rear side 18, extending downwards to form a converging cross-section. The rear side 18 of the body plate 13 is colour-washed or painted in a light colour or alternatively provided with a light colour, such as white, coating.

In use, light from the light-emitting diodes 15 enters from above into the body plate 13, thereby illuminating the body plate 13. The coating on the rear side 18 of the body plate 13 serves to block or at least minimise escape of light through the rear side 18. This arrangement ensures that most of the light entering into the body plate 13 will be reflected forward through the front side 17 of the body plate 13, thereby providing back-light to facilitate reading of the time given by the LCD display 11, particularly in a dark environment.

The rear side 18 of the body plate 13 has a progressively increasing curvature in a direction away from the light-

emitting diodes 15. Such a curved profile provides a progressively increasing angle of reflection for light transmitted further down from the light-emitting diodes 15, said light having a progressively decreasing intensity. This arrangement ensures a substantially uniform back-light intensity over the vertical extent of the illuminator 12. In this particular embodiment, the rear side 18 of the body plate 13 or its side cross-section has a parabolic shape.

It is to be appreciated that the display module described above may be used to display any information otherwise than time, such as numeric counts for a digital counter or measurement values for a measuring device.

Reference is now made to Figures 3 and 4, in which an illuminator 22 of a second display module embodying the invention is shown. The illuminator 22 has a circular body disc 23 of a transparent or translucent acrylic material. The body disc 23 has a central aperture 23' and an inwardly conveying radial cross-section as best shown in Figure 4. Around peripheral side 24 of the body disc 23, there are provided twelve equi-angularly spaced recesses 26 locating corresponding light-emitting diodes 25.

The body disc 23 has a planar front side 27 and a rear side 28 which is curved radially inwardly towards the central aperture 23'. The rear side 28 is provided with a light colour, such as white, coating. The coating on the rear

side 28 of the body disc 23 serves to block or at least minimise escape of light through the rear side 28. This arrangement ensures that most of the light entering into the body disc 23 will be reflected forward through the front side 27 of the body disc 23.

The curved profile of the rear side 28 of the body disc 23 provides a progressively increasing angle of reflection for light transmitted further radially inwardly from the light-emitting diodes 15, said light having a progressively decreasing intensity. This arrangement ensures a substantially uniform back-light intensity over the radial extent of the illuminator 12. The rear side 28 of the body disc 23 or its radial cross-section has a parabolic shape.

This display module further includes a circular liquid crystal display or LCD display (not shown) to be supported co-axially immediately in front of the illuminator 22.

In use, light from the light-emitting diodes 25 enters radially into the body disc 23 and is reflected by the rear side 28 of the body disc 23 to illuminate through its front side 27 the LCD display. The LCD display is provided with a liquid crystal clock dial comprising a peripheral ring of minute reference numerals from "1" to "12" representing every other five minutes and two central co-axial rings of sixty radially extending lines within the minute numerals for simulating moving hour and minute hands. The LCD

display is controlled by an appropriate electronic clock circuit to display a simulated analogue time, whereas the illuminator 22 serves to provide back-light to facilitate reading of the time.

Figure 5 shows a third display module 30 embodying the invention, said display module 30 incorporating the same disc-like illuminator 22 as in the second embodiment described above. The front side 27 of the body disc 23 is provided with printed numerals 31 from "1" to "12" arranged in a circular manner to represent every other five minutes. These numerals 31 are opaque as to stand out from the back-light provided by the illuminator 22 for easy reading. As analog clock/watch movement 32 is located behind the illuminator 22, with it driving shaft 33 passing co-axially through the central aperture 23' of the body disc 23 to support hour, minute and second hands 34 for displaying time.

Figure 6 shows a fourth display module 40 embodying the invention, said display module 40 incorporating the same disc-like illuminator 22 as in the second embodiment and the same analog clock/watch movement 32 and hour, minute and second hands 34 as in the third embodiment described above, arranged in the same manner. This display module 40 does not have any minute numerals but instead an opaque circular plate 41 located on and in conformity with the front side 27 of th body disc 23. The circular plate 41

has an aperture 42 designed to represent, in this particular embodiment, a flower. This arrangement provides back-light in the shape of a flower for easy time reading as well as for enhancing eye appeal.

The invention has been given by way of example only, and various modifications of and/or alterations to the described embodiments may be made by persons skilled in the art without departing from the scope of the invention as specified in the appended claims.

CLAIMS

1. A display module comprising a display and an illuminator provided behind the display, said illuminator being formed by a body of a transparent or translucent material and a light generator provided at the periphery of the body such that light from the light generator is arranged to enter into the body for the illuminator to provide back-light to facilitate reading of the display.

2. A display module as claimed in claim 1, wherein the body has a cross-section converging in a direction away from the light generator in order to render the intensity of the back-light provided by the illuminator substantially uniform.

3. A display module as claimed in claim 2, wherein the body has a substantially planar front side and a curved rear side.

4. A display module as claimed in claim 3, wherein the rear side of the body is substantially parabolic.

5. A display module as claimed in any one of the preceding claims, wherein blocking means is provided on the rear side of the body in order to avoid or to at least minimise escape of light through the rear side.

6. A display module as claimed in claim 5, wherein the rear side of the body is provided with a light colour painting or coating.

7. A display module as claimed in any one of the preceding claims, wherein the light generator is located within the periphery of the body.

8. A display module as claimed in any one of the preceding claims, wherein the light generator is provided by at least one light-emitting diode.

9. A display module as claimed in any one of the preceding claims, wherein the body is provided by a substantially rectangular plate, and the light generator is provided along one peripheral side of the plate.

10. A display module as claimed in any one of the claims 1 to 8, wherein the body is provided by a substantially circular plate, and the light generator is provided around the periphery of the plate.

11. A display module as claimed in any one of the preceding claims, wherein the display is provided by a liquid crystal display.

12. A display module as claimed in any one of claims 1 to 10, wherein the display is provided by opaque element or

elements provided on and/or in front of the illuminator.

13. A display module substantially as hereinbefore described with reference to Figures 1 and 2, Figures 3 and 4, Figure 5 or Figure 6 of the accompanying drawings.

Amendments to the claims have been filed as follows

CLAIMS

1. A display module comprising a display and an illuminator provided behind the display, said illuminator being formed by a body of a transparent or translucent material and light generator means provided at one edge of the body such that light from the light generator is arranged to enter into the body for the illuminator to provide back-light to facilitate reading of the display, the body having a substantially planar front side and a curved rear side and a cross-section converging in a direction away from the edge in order to render the intensity of the back-light provided by the illuminator substantially uniform along the length of the front side, wherein light blocking means are provided on the rear side of the body in order to avoid or to at least minimise escape of light through the rear side, a plurality of blind holes formed in the edge, and a light emitter mounted in each blind hole.

2. A display module as claimed in claim 1, wherein the rear side of the body is parabolically shaped.

3. A display module as claimed in claim 1 or 2, wherein the blocking means has florescent properties.

4. A display module as claimed in any one of claims 1 to 3, wherein the rear side of the body is provided with a

light coloured painting or coating.

5. A display module as claimed in any one of claims 1 to 4, wherein the illuminator has a sheet of diffuser covering the front of the body.

6. A display module as claimed in any one of claims 1 to 5, wherein the light generator comprises light-emitting diodes.

7. A display module as claimed in any one of claims 1 to 6, wherein the body is provided by a planar substantially rectangular body.

8. A display module as claimed in any one of claims 1 to 7, wherein the body is provided by a planar substantially circular body, the light generator being mounted in holes in the peripheral edge of the body.

9. A display module as claimed in any one of claims 1 to 8, wherein the display is provided by a liquid crystal display.

10. A display module substantially as herein described with reference to Figures 1 to 6 of the accompanying drawings.

Patents Act 1977 Examiner's report to the Comptroller under Section 17 (The Search report) -14-	Application number GB 9306838.5
Relevant Technical Fields (i) UK Cl (Ed.M) G5C (CEK, CHX) (ii) Int Cl (Ed.5) G02F 1/1335 G09F 13/18	Search Examiner G M PITCHMAN Date of completion of Search 8 MARCH 1994
Databases (see below) (i) UK Patent Office collections of GB, EP, WO and US patent specifications. (ii)	Documents considered relevant following a search in respect of Claims :- 1 TO 3

Categories of documents

X:	Document indicating lack of novelty or of inventive step.	P:	Document published on or after the declared priority date but before the filing date of the present application.
Y:	Document indicating lack of inventive step if combined with one or more other documents of the same category.	E:	Patent document published on or after, but with priority date earlier than, the filing date of the present application.
A:	Document indicating technological background and/or state of the art.	&:	Member of the same patent family; corresponding document.

Category	Identity of document and relevant passages		Relevant to claim(s)
X	GB 0888255	(KOLLSMAN) see page 4 lines 85-92	1,2,10
X	EP 0520623 A1	(NISSEN CHEMITEC) see Figure 4	1-5,11
X	EP 0377309 A2	(MINNESOTA MINING) see Figure 8	1-8,11
X	US 4909604	(KOBAYASHI) see Figures 1, 2 and 4	1-5,7,8, 9,11
X	US 2297851	(WYSS) see Figure 2	1-5,12

Databases: The UK Patent Office database comprises classified collections of GB, EP, WO and US patent specifications as outlined periodically in the Official Journal (Patents). The on-line databases considered for search are also listed periodically in the Official Journal (Patents).