US010071784B2

(12) **United States Patent**
Callahan

(10) **Patent No.: US 10,071,784 B2**
(45) **Date of Patent: Sep. 11, 2018**

(54) **BICYCLE FRAME WITH CHAIN STAY CHAMBER**

(71) Applicant: **BCycle, LLC**, Waterloo, WI (US)

(72) Inventor: **Ryan Callahan**, Madison, WI (US)

(73) Assignee: **B-Cycle LLC**, Waterloo, WI (US)

(*) Notice: Subject to any disclaimer, the term of this patent is extended or adjusted under 35 U.S.C. 154(b) by 0 days.

(21) Appl. No.: **15/219,274**

(22) Filed: **Jul. 25, 2016**

(65) **Prior Publication Data**

US 2017/0166279 A1 Jun. 15, 2017

Related U.S. Application Data

(60) Provisional application No. 62/196,411, filed on Jul. 24, 2015.

(51) **Int. Cl.**
B62J 13/04 (2006.01)
B62K 19/44 (2006.01)
B62K 3/06 (2006.01)

(52) **U.S. Cl.**
CPC ***B62K 19/44*** (2013.01); ***B62K 3/06*** (2013.01); *B62J 13/04* (2013.01)

(58) **Field of Classification Search**
CPC .. B62K 19/44; B62K 3/06; B62J 13/00; B62J 13/02; B62J 13/04; B62J 13/06
USPC 474/146; 280/152.2, 288.4
See application file for complete search history.

(56) **References Cited**

U.S. PATENT DOCUMENTS

610,313 A * 9/1898 Waters B62J 13/00 474/147
611,750 A * 10/1898 Fulford B62J 13/00 474/147
613,469 A * 11/1898 Ramsey B62J 13/00 474/147
659,235 A * 10/1900 Jeffery B62J 13/00 474/147
952,647 A * 3/1910 Sorensen B62J 13/00 474/145
3,724,582 A * 4/1973 Wood B62J 13/04 180/219
2003/0224891 A1* 12/2003 Chou B62J 13/00 474/146
2009/0197725 A1* 8/2009 Chuang B62J 13/02 474/144

* cited by examiner

Primary Examiner — Tony H Winner

(57) **ABSTRACT**

An apparatus including a bicycle frame including a drive side chain stay. The drive side chain stay can include a drive side chain stay chamber, an inside chain stay cutout, an outside chain stay cutout; and a dropout. The drive side chain stay can be configured such that a chain of a bicycle including the bicycle frame can be inserted through the inside chain stay cutout, the drive side chain stay chamber, and the outside chain stay cutout without breaking the chain.

14 Claims, 6 Drawing Sheets

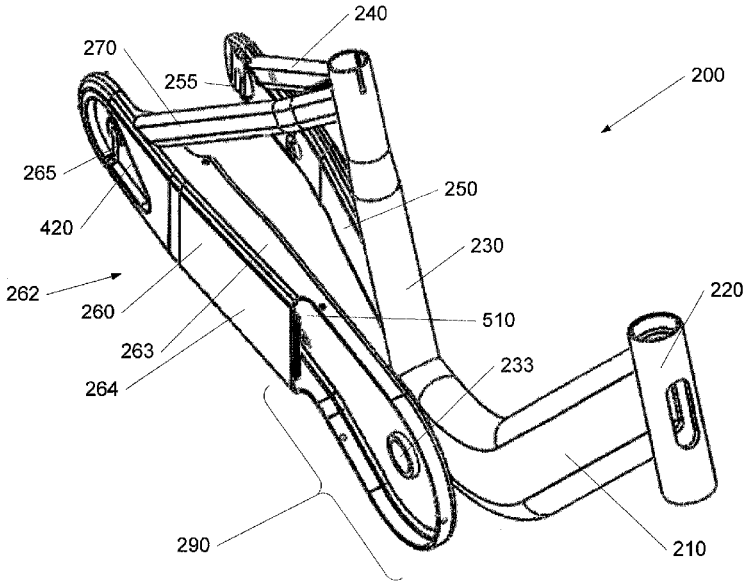

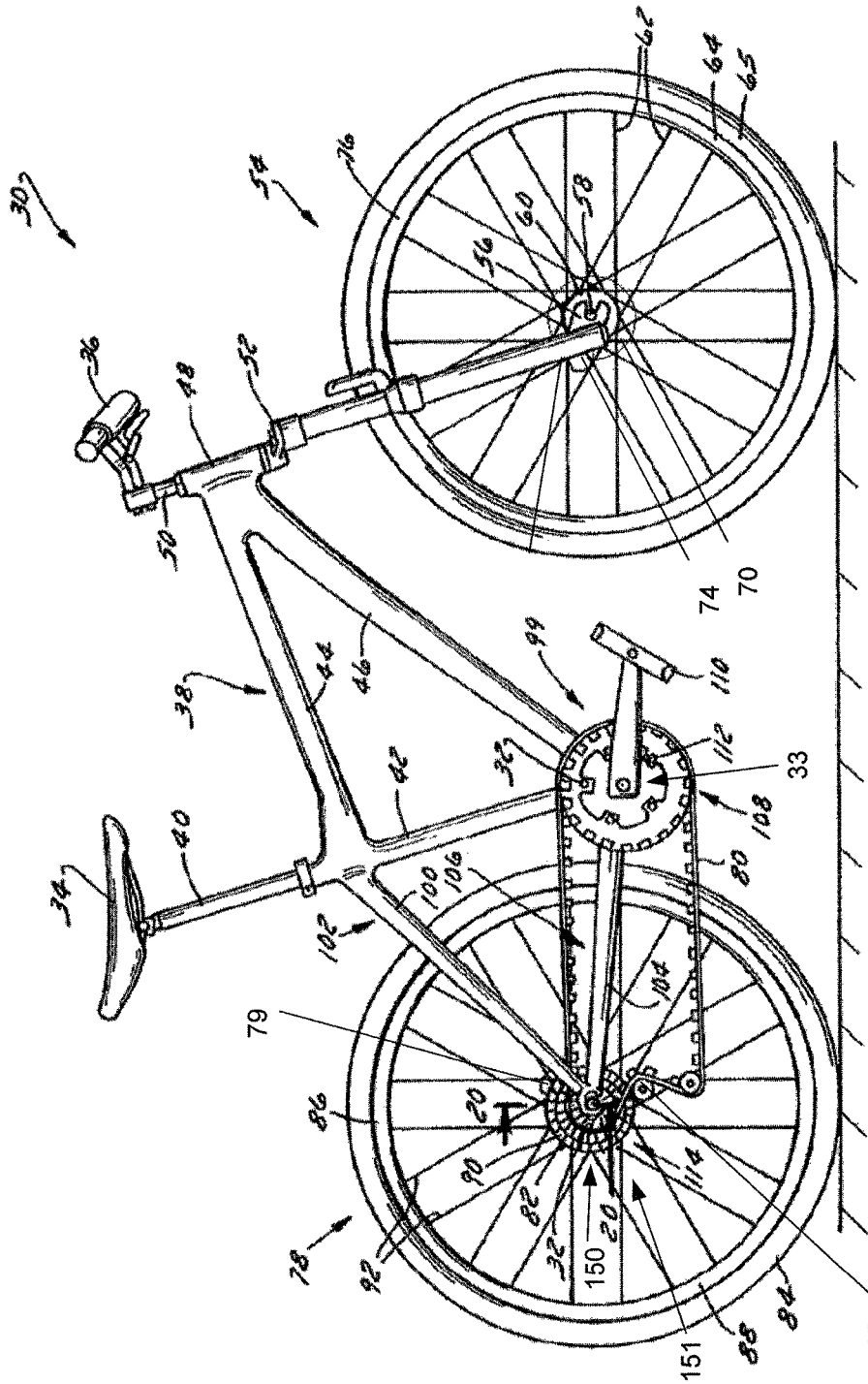
30
54
76
62
64
65
56
60
58
36
48
52
50
74
70
38
44
46
99
110
42
36
112
33
108
40
34
100
106
80
102
104
79
86
20
90
82
32
150
20
114
78
92
151
88
84
15

FIG 1

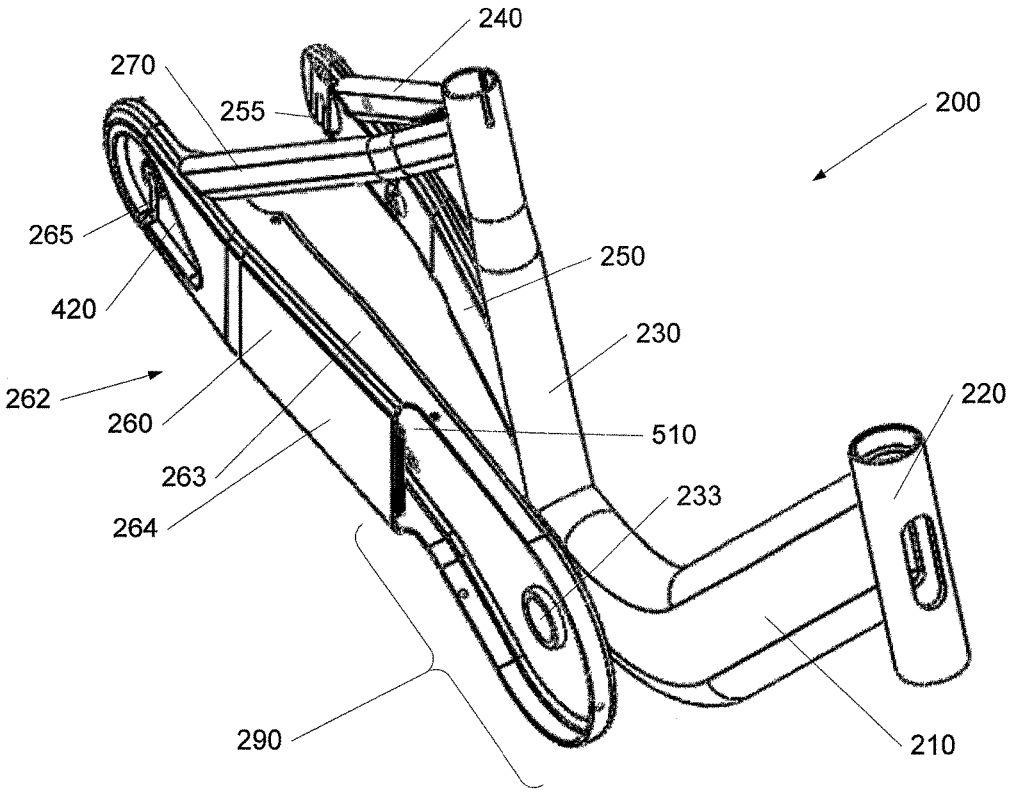
240
270
255
200
265
250
420
230
262
220
260
510
263
233
264
290
210

FIG. 2

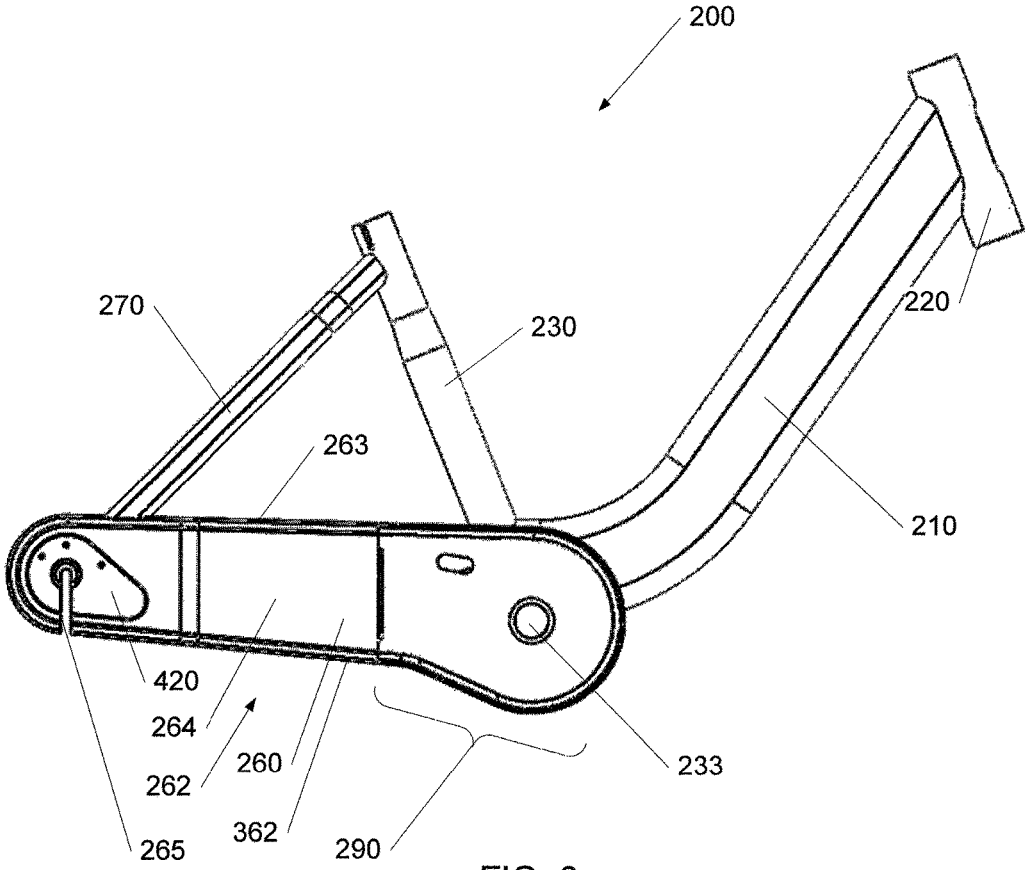

FIG. 3

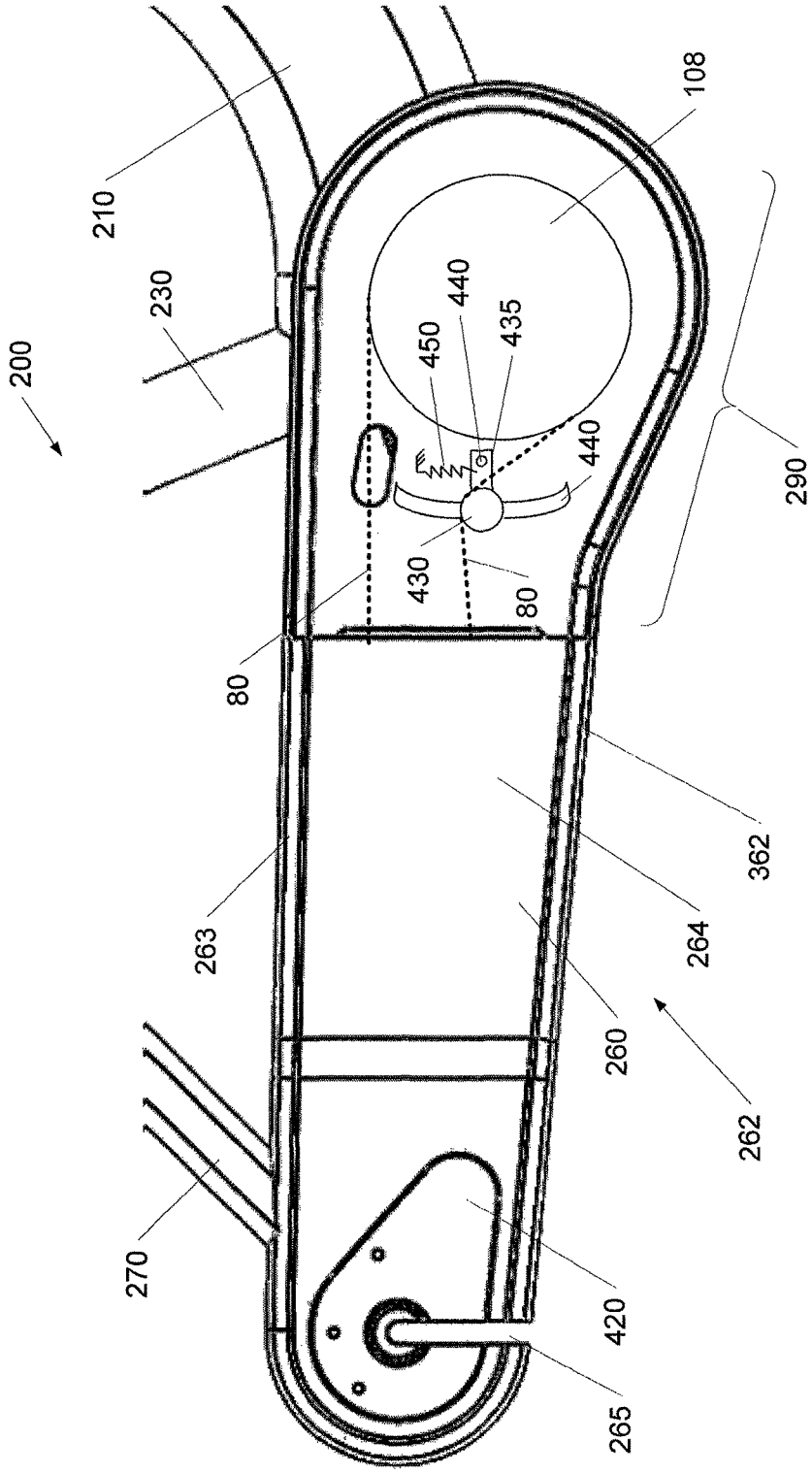
200
210
230
108
440
450
435
440
290
430
80
80
263
362
264
260
262
270
420
265

FIG. 4

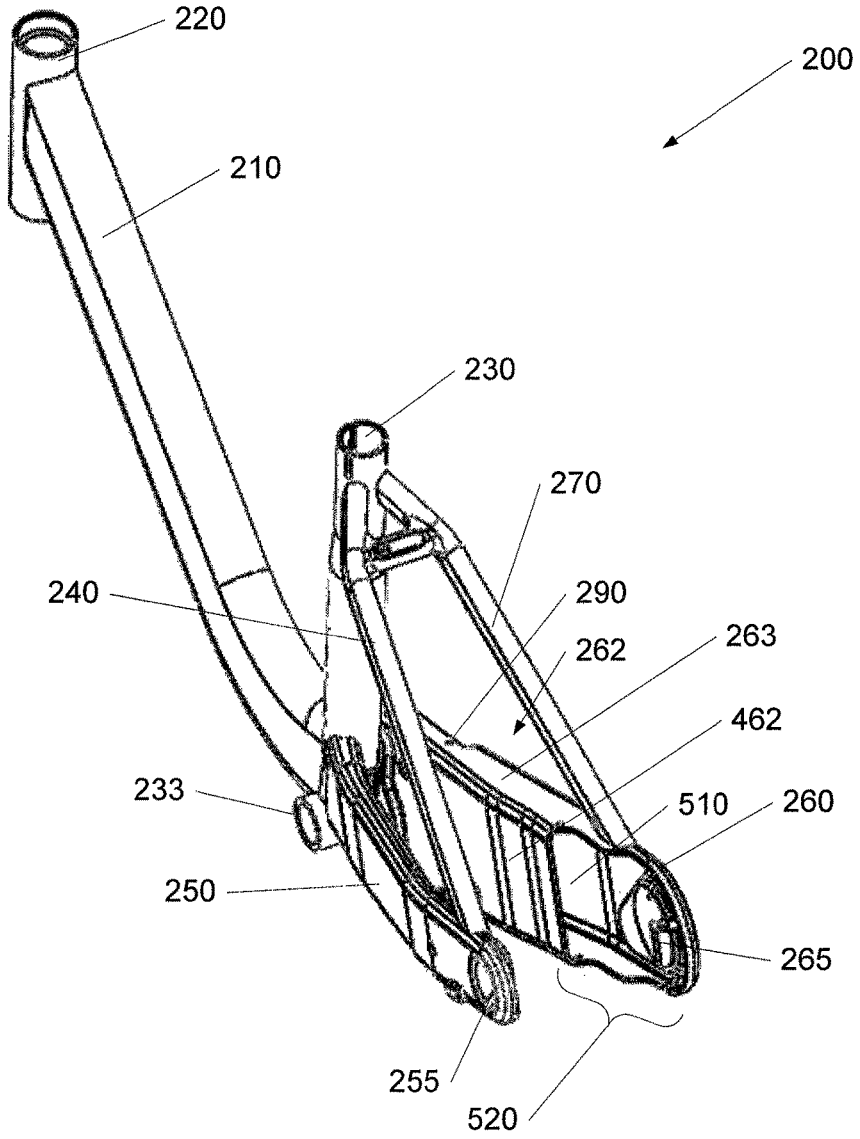
220
200
210
230
270
240
290
262
263
462
233
510
260
250
265
255
520

FIG. 5

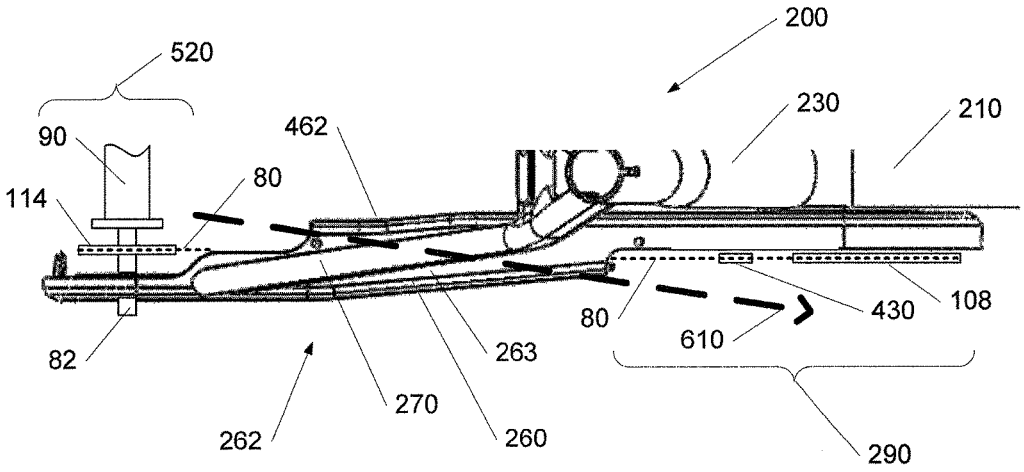
200
520
230
210
462
90
80
114
108
430
80
610
82
263
270
262
260
290

FIG. 6

BICYCLE FRAME WITH CHAIN STAY CHAMBER

CROSS REFERENCE TO RELATED APPLICATIONS

This application claims the benefit of U.S. Provisional Application No. 62/196,411, filed on Jul. 24, 2015, titled Bicycle Frame with Drive Side Seat [sic] Stay Chamber, which is incorporated herein by reference in its entirety.

BACKGROUND

The present invention relates generally to the field of bicycle frames and more particularly to the field of bicycle frames with fleet maintenance features.

A typical bicycle includes a seat tube, a chain stay and a seat stay which are connected together in a triangle. In the typical bicycle, a chain must be broken in order to install the chain through the triangle because the chain must be connected to a cassette, which is on one side (the inside) of the triangle, and the chain ring, which is on the other side (the outside) of the triangle. Thus, a mechanic must spend time to break and assemble chains when serving the chain. Consequently, improved chain maintenance configurations are needed.

SUMMARY

One illustrative embodiment is related to an apparatus including a bicycle frame including a drive side chain stay. The drive side chain stay can include a drive side chain stay chamber, an inside chain stay cutout, an outside chain stay cutout; and a dropout. The drive side chain stay can be configured such that a chain of a bicycle including the bicycle frame can be inserted through the inside chain stay cutout, the drive side chain stay chamber, and the outside chain stay cutout without breaking the chain.

Another illustrative embodiment is related to a bicycle including a bicycle frame including a drive side chain stay. The drive side chain stay can include a drive side chain stay chamber, an inside chain stay cutout, an outside chain stay cutout; and a dropout. The drive side chain stay can be configured such that a chain of a bicycle including the bicycle frame can be inserted through the inside chain stay cutout, the drive side chain stay chamber, and the outside chain stay cutout without breaking the chain.

BRIEF DESCRIPTION OF THE DRAWINGS

The foregoing and other features of the present disclosure will become more fully apparent from the following description and appended claims, taken in conjunction with the accompanying drawings. Understanding that these drawings depict only several embodiments in accordance with the disclosure and are, therefore, not to be considered limiting of its scope, the disclosure will be described with additional specificity and detail through use of the accompanying drawings.

FIG. **1** is a side view of a bicycle in accordance with an illustrative embodiment.

FIG. **2** is a front perspective view of a bicycle frame in accordance with an illustrative embodiment.

FIG. **3** is a side view of the bicycle frame of FIG. **2** in accordance with an illustrative embodiment.

FIG. **4** is a side detail view of the bicycle frame of FIG. **2** in accordance with an illustrative embodiment.

FIG. **5** is a rear perspective view of the bicycle frame of FIG. **2** in accordance with an illustrative embodiment.

FIG. **6** is a top detail view of the bicycle frame of FIG. **2** in accordance with an illustrative embodiment.

DETAILED DESCRIPTION OF THE ILLUSTRATIVE EMBODIMENTS

In the following detailed description, reference is made to the accompanying drawings, which form a part hereof. In the drawings, similar symbols typically identify similar components, unless context dictates otherwise. The illustrative embodiments described in the detailed description, drawings, and claims are not meant to be limiting. Other embodiments may be utilized, and other changes may be made, without departing from the spirit or scope of the subject matter presented here. It will be readily understood that the aspects of the present disclosure, as generally described herein, and illustrated in the figures, can be arranged, substituted, combined, and designed in a wide variety of different configurations, all of which are explicitly contemplated and make part of this disclosure.

The present disclosure is directed to a bicycle frame including a chain stay chamber for routing a chain and a bicycle including the bicycle frame. FIG. **1** shows a bicycle **30** including a chain stay chamber for routing a chain. Bicycle **30** can include a seat **34** and handlebars **36** that are attached to a frame assembly **38** of bicycle **30**. A seat post **40** can be connected to seat **34** and can slidably engage a seat tube **42** of frame assembly **38**. A top tube **44** and a down tube **46** can extend forwardly from seat tube **42** to a head tube **48** of frame assembly **38**. Handlebars **36** can be connected to a stem **50** that passes through head tube **48** and engages a fork crown **52**.

A pair of fork blades **53** extend from generally opposite ends of fork crown **52** and are constructed to support a front wheel assembly **54** at an end of each fork or a fork tip **56**. Fork tips **56** engage generally opposite sides of an axle **58** that supports a hub **60** of front wheel assembly **54**. A number of spokes **62** extend from hub **60** to a rim **64** of front wheel assembly **54**. A tire **65** is engaged with rim **64** such that rotation of tire **65**, relative to forks **53**, rotates rim **64** and hub **60**.

Bicycle **30** can include a front brake assembly **70** having an actuator **72** attached to handlebars **36** and a caliper **74** positioned on a rotor **73**. Caliper **74** is constructed to engage the rotor **73**, which is attached to front wheel assembly **54**, thereby providing a stopping or slowing force to front wheel assembly **54**. A rear wheel assembly **78** can include a similar caliper **79** positioned on a rotor (not shown) although either of front and/or rear wheel assemblies could be provided with rim type braking assemblies. Regardless of the specific configuration of the respective braking system, similar to front wheel assembly **54**, rear wheel assembly **78** also can include a skewer, shaft, or axle **82** that secures rear wheel assembly **78** to frame assembly **38** of bicycle **30** via axle mounting **150**.

Rear wheel assembly **78** can include a tire **84** that is supported by a wheel **86**. Wheel **86** can include a rim **88** that is offset from a hub **90** by a number of spokes **92**. Alternatively, wheel **86** could include laterally opposite discs that extend between rim **88** and hub **90**. Hub **90** can cooperate with axle **82** such that wheel **86** rotates about an axis of rotation defined by axle **82** relative to frame assembly **38** during use of bicycle **30**. Rear wheel assembly **78** and axle **82** can be selectively positioned relative to bicycle **30** to tension a drive member, such as a chain or belt **80** of a drive

train **99** of bicycle **30**. Drive member **80** can be formed of a chain or fairly robust but pliable material such as reinforced carbon fiber material.

Frame assembly **38** can include a pair of seat stays **100**, **102** and a pair of chain stays **104**, **106** that offset rear axle **82** from a crankset **108** of bicycle **30**. As described further below, stays **100**, **102**, **104**, **106** can be oriented to generally flank rear wheel assembly **78**. Seat stays **100**, **102** and chain stays **104**, **106** can be positioned on and support the generally laterally opposite sides axle **82** of wheel assembly **78**. In other embodiments, a single chain stay and a single seat stay of robust construction could be provided such that wheel assembly **78** could be mounted in a lateral cantilevered fashion relative thereto. Chain stay **106** can include a chain stay chamber for routing chain/belt **80** from crankset **108** to cassette **114** without breaking the chain/belt **80**.

Crankset **108** can include a set of pedals **110** that are operationally connected to chain/belt **80** via a drive member such as a chain ring, sprocket or drive cog **112**. Crankset **108** can be attached to the frame by bottom bracket **33**. Although crankset **108** is shown as having only one sprocket **112**, it is envisioned that crankset **108** can include more than one sprocket having an alternate operating diameter thereby increasing the gearing ratios that can be achieved with drive train **99**. Rotation of chain/belt **80** communicates a drive force to a rear section or driven sprocket(s), element(s), pulley(s), gear(s), or cog(s) that, in a multi-ratio free-wheel capable configuration, is commonly referred to as a cassette **114**. Rotation of chain/belt **80** drives cassette **114** which is turn rotates rear wheel assembly **78** so as to propel bicycle **30** in a forward direction. A derailleur **15** can control the position of the chain/belt **80** on the cassette **114**.

Crankset **108** and cassette **114** can each include one or more variable diameter drive members or cogs so that drive train **99** can be operated at a number of gearing ratios. The construction of the drive train members or cogs can vary as a function of the type of chain or flexible drive **80**. That is, the construction and operation of the drive train members associated with crankset **108** and/or cassette **114** when flexible drive **80** is provided as a belt can be different than those used with drive train systems equipped with a chain. Regardless of the specific material and/or shape of the construction of the chain or flexible drive member, the drive train members or cogs can mate with the flexible drive member in a manner such that the flexible drive member includes a projecting or male structure that interfering cooperates with a cavity or female structure associated with each of respective cog. Such differences are readily appreciated. The axle mounting **150** can be used with belt and/or chain, single and multiple driven member crankset and wheel cassettes, bicycle drive train systems.

Regardless of the specific modality of flexible drive **80** and the driving arrangement for interacting with the flexible drive **80**, forward rotation or clockwise operation (when viewed from a right hand of lateral drive side of bicycle **30**) of drive cog **112** can interact with at least one driven cog associated with rear wheel assembly **78** or a cassette **114** to rotate wheel **86** in a clockwise or forward driving direction. Cassette **114** can be generally concentrically orientated with respect to rear axle **82**. Cassette **114** can be operationally connected to hub **90** of a rear wheel **86** of rear wheel assembly **78**. Rider operation of pedals **110** powers drive train **99** to drive belt **80** and thereby drive rear wheel **86** which in turn propels bicycle **30**. Alternatively, a motor can be used to power drive train **99**. In other embodiments, rather than being provided with a free-wheel configuration, it is envisioned that one or more cogs as disclosed below can be directly to secured to hub **90** of rear wheel **86** to impart the driving force thereto.

Referring now to FIG. **2**, a front perspective view of a bicycle frame **200** in accordance with an illustrative embodiment is shown. Referring to FIG. **3**, a side view of the bicycle frame **200** of FIG. **2** in accordance with an illustrative embodiment is shown. Referring to FIG. **4**, a side detail view of the bicycle frame **200** of FIG. **2** in accordance with an illustrative embodiment is shown. Referring to FIG. **5**, a rear perspective view of the bicycle frame **200** of FIG. **2** in accordance with an illustrative embodiment is shown. Referring to FIG. **6**, a top detail view of the bicycle frame **200** of FIG. **2** in accordance with an illustrative embodiment is shown.

The bicycle frame **200** can include a down tube **210**, a head tube **220**, a seat tube **230**, bottom bracket **233**, a non-drive side seat stay **240**, a non-drive side seat stay **250**, a non-drive side dropout **255**, a drive side chain stay **260**, a drive side dropout **265**, and a drive side seat stay **270**. The down tube **210**, head tube **220**, seat tube **230**, bottom bracket **233**, non-drive side seat stay **240**, non-drive side seat stay **250**, non-drive side dropout **255**, drive side chain stay **260**, drive side dropout **265**, and drive side seat stay **270** can be configured as noted above.

The drive side chain stay **260** can include a drive side chain stay structure **262**. The drive side chain stay structure **262** can include a top side **263**, an outside **264**, a bottom **362**, and an inside **462**. The top side **263**, an outside side **264**, a bottom **362**, and an inside side **462** can form a chamber **510** through which a chain or belt **80** can be routed without breaking a loop of the chain or belt **80**. An outside chain stay cut out **290** can be located on a front end of the drive side chain stay **260** towards the head tube **220** and face toward an outside of the bike (i.e., away from the non-drive side dropout **255**). An inside chain stay cut out **520** can be located on a rear end of the drive side chain stay **260** towards the dropouts **265**, **255** and face toward an inside of the bike (i.e., towards the non-drive side dropout **255**). Thus, the chain or belt **80**, when inserted, can extend from the outside chain stay cut out **290** on the outside of the bicycle frame **200** to the inside chain stay cut out **520** on the inside of the bicycle frame **200** as shown by arrow **610**.

The outside chain stay cut out **290** can expose the crankset **108** of the bicycle. In one embodiment, the outside chain stay cut out **290** can be covered by a shroud (not shown). The inside chain stay cut out **520** can expose the cassette **114**. In one embodiment, the inside chain stay cut out **520** can be covered by a shroud (not shown). The drive side chain stay **260** can include a rear axle access port **420** for accessing the rear axle **82**. The rear axle access port **420** can be covered by a shroud (not shown). In one embodiment, the chain or belt **80** is at least partially enclosed by the drive side chain stay structure **262**. In another, embodiment, the chain or belt **80** is fully enclosed by the drive side chain stay structure **262** and shrouds.

In one embodiment, the drive side chain stay **260** can include a tensioning sprocket **430**. The tensioning sprocket **430** can be attached to a tensioning arm **435** that pivots on a pivot **440**. A spring **450** can be attached to the tensioning arm **435** and the drive side chain stay structure **262**. The tensioning sprocket **430** can travel in a travel slot **440**. The tensioning sprocket **430** can tension chain or belt **80**. In an alternative embodiment, the chain or belt **80** can be tensioned using only the non-drive side dropout **255** and the drive side dropout **265**.

The rear axle **82** can be installed between the non-drive side dropout **255** and the drive side dropout **265**. To remove a chain or belt **80**, first a mechanic would remove any shrouds. If the chain or belt **80** is tensioned using a tensioning sprocket **430**, the chain or belt **80** can be removed from the tensioning sprocket **430**. The rear axle **82** can be loosened from the non-drive side dropout **255** and the drive side dropout **265**. When the rear axle **82** is slid out of the dropouts **255**, **265**, the chain or belt **80** can be removed from the cassette **114**. The chain or belt **80** can be removed from the crankset **108**. Finally, the chain or belt **80** can be removed from the drive side chain stay structure **262**, either from the outside chain stay cut out **290** or the inside chain stay cut out **520**.

To install a chain or belt **80**, the reverse is executed. The mechanic can insert the chain or belt **80**, which is in a completely loop, into the drive side chain stay structure **262**, either from the outside chain stay cut out **290** or the inside chain stay cut out **520**. The chain or belt **80** can be mated to the crankset **108**. When the rear axle **82** is slid out of the dropouts **255**, **265**, the chain or belt **80** can be mated to the cassette **114**. The rear axle **82** can be installed into the non-drive side dropout **255** and the drive side dropout **265** and tightened. If the chain or belt **80** is tensioned using a tensioning sprocket **430**, the chain or belt **80** can be installed on the tensioning sprocket **430**. Finally, a mechanic would install any shrouds.

Advantageously, the chain or belt **80** can be installed or replaced without breaking the chain or belt **80**.

One or more flow diagrams may have been used herein. The use of flow diagrams is not meant to be limiting with respect to the order of operations performed. The herein described subject matter sometimes illustrates different components contained within, or connected with, different other components. It is to be understood that such depicted architectures are merely exemplary, and that in fact many other architectures can be implemented which achieve the same functionality. In a conceptual sense, any arrangement of components to achieve the same functionality is effectively "associated" such that the desired functionality is achieved. Hence, any two components herein combined to achieve a particular functionality can be seen as "associated with" each other such that the desired functionality is achieved, irrespective of architectures or intermedial components. Likewise, any two components so associated can also be viewed as being "operably connected", or "operably coupled", to each other to achieve the desired functionality, and any two components capable of being so associated can also be viewed as being "operably couplable", to each other to achieve the desired functionality. Specific examples of operably couplable include but are not limited to physically mateable and/or physically interacting components and/or wirelessly interactable and/or wirelessly interacting components and/or logically interacting and/or logically interactable components.

With respect to the use of substantially any plural and/or singular terms herein, those having skill in the art can translate from the plural to the singular and/or from the singular to the plural as is appropriate to the context and/or application. The various singular/plural permutations may be expressly set forth herein for sake of clarity.

It will be understood by those within the art that, in general, terms used herein, and especially in the appended claims (e.g., bodies of the appended claims) are generally intended as "open" terms (e.g., the term "including" should be interpreted as "including but not limited to," the term "having" should be interpreted as "having at least," the term "includes" should be interpreted as "includes but is not limited to," etc.). It will be further understood by those within the art that if a specific number of an introduced claim recitation is intended, such an intent will be explicitly recited in the claim, and in the absence of such recitation no such intent is present. For example, as an aid to understanding, the following appended claims may contain usage of the introductory phrases "at least one" and "one or more" to introduce claim recitations. However, the use of such phrases should not be construed to imply that the introduction of a claim recitation by the indefinite articles "a" or "an" limits any particular claim containing such introduced claim recitation to inventions containing only one such recitation, even when the same claim includes the introductory phrases "one or more" or "at least one" and indefinite articles such as "a" or "an" (e.g., "a" and/or "an" should typically be interpreted to mean "at least one" or "one or more"); the same holds true for the use of definite articles used to introduce claim recitations. In addition, even if a specific number of an introduced claim recitation is explicitly recited, those skilled in the art will recognize that such recitation should typically be interpreted to mean at least the recited number (e.g., the bare recitation of "two recitations," without other modifiers, typically means at least two recitations, or two or more recitations). Furthermore, in those instances where a convention analogous to "at least one of A, B, and C, etc." is used, in general such a construction is intended in the sense one having skill in the art would understand the convention (e.g., "a system having at least one of A, B, and C" would include but not be limited to systems that have A alone, B alone, C alone, A and B together, A and C together, B and C together, and/or A, B, and C together, etc.). In those instances where a convention analogous to "at least one of A, B, or C, etc." is used, in general such a construction is intended in the sense one having skill in the art would understand the convention (e.g., "a system having at least one of A, B, or C" would include but not be limited to systems that have A alone, B alone, C alone, A and B together, A and C together, B and C together, and/or A, B, and C together, etc.). It will be further understood by those within the art that virtually any disjunctive word and/or phrase presenting two or more alternative terms, whether in the description, claims, or drawings, should be understood to contemplate the possibilities of including one of the terms, either of the terms, or both terms. For example, the phrase "A or B" will be understood to include the possibilities of "A" or "B" or "A and B."

The foregoing description of illustrative embodiments has been presented for purposes of illustration and of description. It is not intended to be exhaustive or limiting with respect to the precise form disclosed, and modifications and variations are possible in light of the above teachings or may be acquired from practice of the disclosed embodiments. It is intended that the scope of the invention be defined by the claims appended hereto and their equivalents.

What is claimed is:

1. An apparatus, comprising:

a bicycle frame including a drive side chain stay, wherein the drive side chain stay comprises:

a drive side chain stay chamber,

an inside chain stay cutout,

an outside chain stay cutout; and

a dropout;

configured such that a chain can be inserted through the inside chain stay cutout, the drive side chain stay chamber, and the outside chain stay cutout without breaking the chain.

2. The apparatus of claim **1**, further comprising a tensioning sprocket for tensioning the chain.

3. The apparatus of claim **1**, wherein the outside chain stay cutout is located at a bottom bracket of the bicycle frame.

4. The apparatus of claim **1**, wherein the outside chain stay cutout is configured to expose a crankset of the bicycle, wherein the crankset is configured to drive the chain.

5. The apparatus of claim **1**, wherein the inside chain stay cutout is located at an inside side of the dropout of the bicycle frame.

6. The apparatus of claim **1**, wherein the inside chain stay cutout is configured to expose a cassette of the bicycle.

7. The apparatus of claim **1**, wherein the drive side chain stay chamber includes a top side, an outside side, a bottom, and an inside side.

8. An apparatus, comprising:

a bicycle including a bicycle frame comprising a drive side chain stay, wherein the drive side chain stay includes:

a drive side chain stay chamber,

an inside chain stay cutout,

an outside chain stay cutout; and

a dropout;

configured such that a chain can be inserted through the inside chain stay cutout, the drive side chain stay chamber, and the outside chain stay cutout without breaking the chain.

9. The apparatus of claim **8**, further comprising a tensioning sprocket for tensioning the chain.

10. The apparatus of claim **8**, wherein the outside chain stay cutout is located at a bottom bracket of the bicycle frame.

11. The apparatus of claim **8**, wherein the outside chain stay cutout is configured to expose a crankset of the bicycle, wherein the crankset is configured to drive the chain.

12. The apparatus of claim **8**, wherein the inside chain stay cutout is located at an inside side of the dropout of the bicycle frame.

13. The apparatus of claim **8**, wherein the inside chain stay cutout is configured to expose a cassette of the bicycle.

14. The apparatus of claim **8**, wherein the drive side chain stay chamber includes a top side, an outside side, a bottom, and an inside side.

* * * * *