July 11, 1950 G. D. HANCHETT, JR 2,514,863

MULTIPLE CIRCUIT BREAKER

Filed Dec. 6, 1947

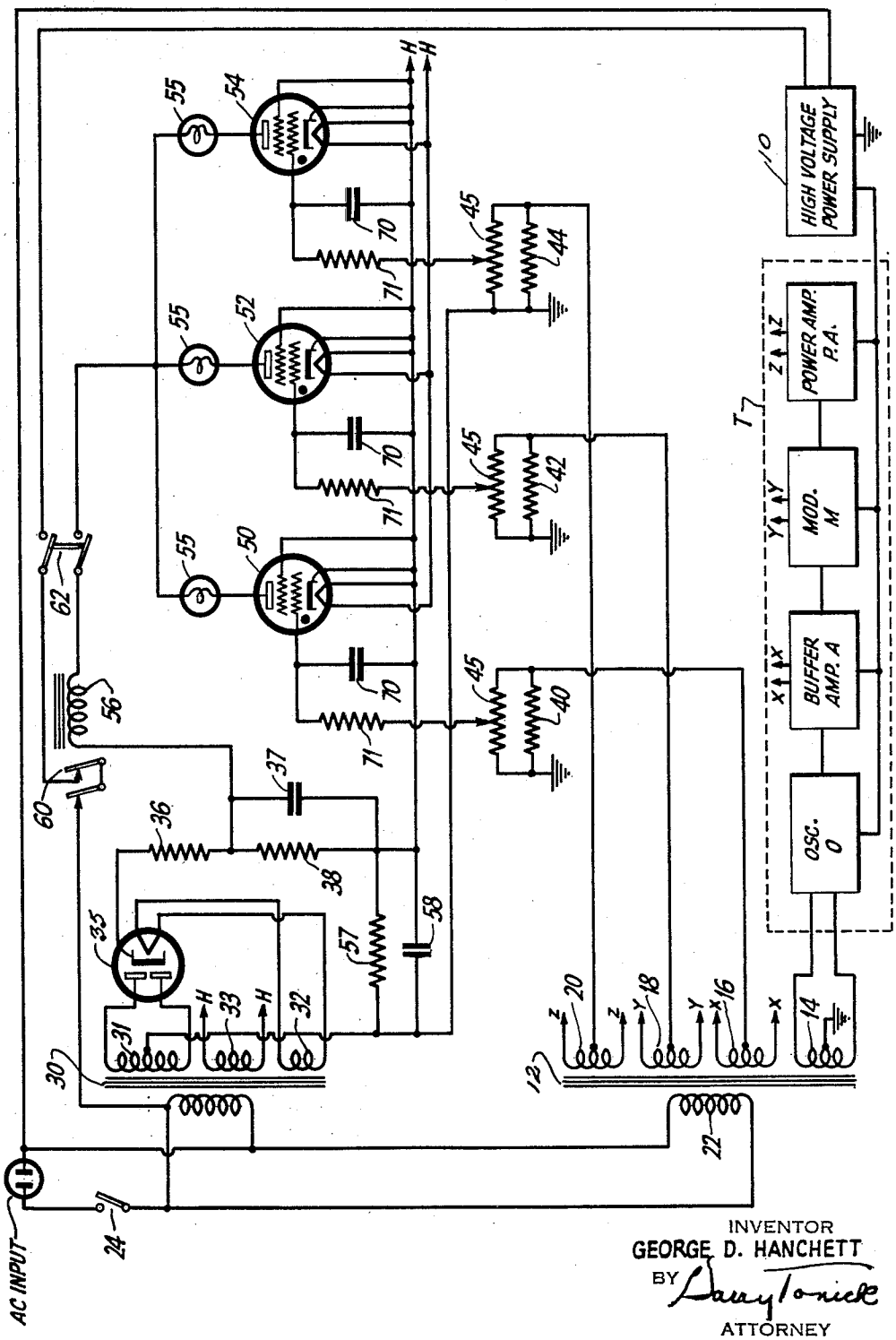

INVENTOR
GEORGE D. HANCHETT
BY Barry Tonick
ATTORNEY

Patented July 11, 1950 2,514,863

UNITED STATES PATENT OFFICE

2,514,863

MULTIPLE CIRCUIT BREAKER

George D. Hanchett, Jr., Millburn, N. J., assignor to Radio Corporation of America, a corporation of Delaware

Application December 6, 1947, Serial No. 790,060

12 Claims. (Cl. 250—17)

1

The present invention relates to circuit breakers and, more particularly, to a circuit arrangement for providing overload protection for a plurality of separate circuits. All of the other heretofore known methods available for protecting radio transmitters and equipment of which I am aware have certain disadvantages. Fuses are not very reliable and for high voltage protection are relatively expensive. Magnetic circuit breakers, while ordinarily superior to fuses, ore quite expensive when a number of circuits have to be protected. Furthermore, a magnetic circuit breaker is not easily reset. Circuit breakers of this type are ordinarily equipped with a local directly acting operating lever for resetting. The circuit breakers are either mounted directly on a radio transmitter panel itself or somewhere on the power supply chassis. Thus, when a breaker operates, it is necessary to leave the operating position and go to the breaker to return the transmitter to the air. In the event it is desired to arrange such circuit breakers for remote resetting, some form of magnetic resetting device is required but this feature greatly increases the cost of the circuit breaker.

An object of the present invention, therefore, is to provide a multiple circuit breaker which will overcome the foregoing difficulties.

Another object of the present invention is the provision of an arrangement for using electronic tubes to accomplish circuit protection.

Another object of the present invention is the provision of an electronic circuit breaker which will protect several independent circuits with the same breaker.

A further object of the present invention is the provision of an electronic circuit breaker which may be reset by throwing a simple switch which may be located at any convenient location.

Still another object of the present invention is the provision of a circuit breaker as aforesaid which will immediately reoperate if the circuit fault has not cleared.

Still a further object of the present invention is to provide a circuit breaker which is fast enough in action to prevent damage to meters associated with the circuits protected.

The foregoing objects and others which may appear from the following detailed description are attained by providing an electronic circuit breaker using a number of "Thyratrons" or gas discharge tubes having a common plate circuit including a circuit opening relay. The gas discharge tubes are so arranged that space currents of the various stages in the radio transmitter

2

with which they are associated apply predetermined voltages to the control grids of the tubes. When these values are exceeded, the gas discharge tubes are triggered into action. The resultant plate current flow through the common relay winding opens a circuit supplying plate potential to the transmitter. Due to the nature of a gas discharge tube, once the grid has been triggered, plate current continues to flow until the plate potential is reduced below ionization potential. The control circuit for reclosing the main circuit breaker is so arranged that the operation of closing the main circuit breaker removes plate potential from the gas discharge tubes.

An additional feature of the present invention is the arrangement of small filamentary lamps in the individual plate circuits of the gas discharge tubes adapted to become illuminated when the gas tubes draw current. These small lamps thus act as pilot lights to indicate which of the various stages of the transmitter is causing the trouble.

While the present invention is described as being applied to a radio transmitter, it may equally well be employed for circuit protection when a number of separate circuits are supplied with current from a single source and it may not be undesirable to disable all circuits upon failure of any one individual circuit.

To insure fast action, the initial relay current may be increased by about 50% through the use of a condenser charged by a resistance in series with the source of anode potential for the gas tubes. Upon ionization of the gas discharge tubes, the energy in the condenser is discharged through the relay coil, causing increased speed of operation of the protective relay. After the initial charge has been dissipated, only normal relay current flows.

The present invention will be more fully understood by reference to the following detailed description which is accompanied by a drawing having a single figure. In this figure a radio transmitter T is indicated in block diagram form as including, for example, an oscillator O, a buffer amplifier A, a modulator M and power amplifier PA, each of which is to be separately monitored for excessive anode current. A high voltage supply for the anode circuits of the various stages in transmitter T is supplied by high voltage power supply 10. The filaments of the various stages are preferably supplied from separate windings of a filament transformer 12. Thus winding 14 supplies filament current to the

oscillator stage and windings 16, 18 and 20 supply filament current to the buffer amplifier A, modulator M and power amplifier PA respectively. The primary 22 of the filament transformer is connected to the usual 110 volt, 60 cycle power source through the filament control switch 24. The filament control switch also applies 110 volt, 60 cycle energy to the primary of a power transformer 30 having a high voltage winding 31, a rectifier filament winding 32 and a further filament winding 33. The high voltage winding 31 and the filament winding 32 are connected to rectifier tube 35 in a conventional full wave rectifier connection. The resultant direct current output is filtered by a series resistance 36 and a filter condenser 37 having a bleeder resistor 38 thereacross. The filtered direct current is applied, through relay winding 56 to the anodes of gas tubes 50, 52 and 54.

Now, the filament windings 16, 18 and 20 supplying the transmitter stages A, M and PA each have mid-taps which would normally be directly connected to ground or the negative side of the high voltage supply to complete the anode current circuit. In some cases bias resistors may be inserted at this point. In order to provide a source of potential, the magnitude of which varies in accordance with the load carried by various stages of the transmitter, series resistors 40, 42 and 44 are connected between the center taps of windings 16, 18 and 20 respectively and ground. These resistors are large enough in resistance to produce a voltage thereacross somewhat in excess of two volts at the minimum current desired for circuit breaker operation. Potentiometers 45 connected across each of the resistors 40, 42 and 44 provide for fine adjustment to the exact voltage to be applied to the grids of tubes 50, 52 and 54 for triggering off these tubes when excessive anode currents are drawn by the various stages of the transmitter. The moving arm of each of the potentiometers 45 is connected to the control grid of one of the gas discharge pentodes 50, 52 and 54. In the anode circuits of each of these tubes is connected a filament lamp 55 serving as a pilot light to indicate which gas tube is operating, and thus the stage of the transmitter which is in trouble. The screen electrodes and cathodes of each of the tubes 50, 52 and 54 are connected together and to the negative end of resistor 38. This terminal is connected to ground through the further resistor 57 bypassed by condenser 58. Resistor 57 acts as a cathode bias resistor setting the standing bias on tubes 50, 52 and 54 simultaneously, which must be at least overcome by the positive potential applied to their grids from resistors 40, 42 and 44. Now, when the voltage drop across any of the resistors 40, 42 and 44 exceeds the predetermined negative grid potential applied by resistor 57 the grid of corresponding tube 50, 52, or 54 becomes positive to such an extent that the tube becomes conductive. This causes a flow of current from the rectifier 35 through the winding of relay 56, causing relay 56 to separate its contacts 60. This opens the circuit between the 110 volt supply and the input terminals of the high voltage power supply 10. The lamp 55 associated with the conductive gas tube also lights.

In the circuit between the power source and the input terminals of power supply 10 is connected half of a double pole single throw switch 62. The other half of the switch is connected in series between the winding of relay 56 and the anodes of tubes 50, 52 and 54. Now, to reenergize the transmitter the operator opens switch 62 which removes the input to the high voltage power supply 10 and simultaneously opens the circuit between the rectifier and the gas discharge tubes 50, 52 and 54. This causes the conductive one of these tubes to cease drawing anode current. Relay 56 drops back and closes its contacts 60. Reclosing the plate power switch 62 reapplies anode potential to the transmitter T. If the fault in the transmitter which causes the increase of voltage drop across the resistors 40, 42 and 44 is still present, the circuit breaker immediately reopens.

The use of a large filter capacitor 37 for the rectifier supply and the gas discharge tubes provides a reservoir of energy which increases the speed of operation of relay 56. After the initial charge stored in condenser 37 has been dissipated, however, only normal relay current flows because it is limited by the resistance of resistor 36 and the pilot lamp 55 in the energized gas discharge tube circuit. It has been found that the action of the circuit breaker is fast enough in most cases so that the pointer of a meter connected in the plate supply of the transmitter will not reach full scale deflection even on a dead short circuit.

Since the electronic circuit breaker is usually operated near strong radio frequency fields, it is desirable to incorporate some radio frequency filter in the grid circuit of each gas discharge tube. This is provided by a mica-capacitor 70 connected directly across tube socket connections to the grid and cathode of each gas discharge tube and a resistor 71 in series between each of the grids and its respective potentiometer 45.

While the present invention has been described from the viewpoint of protecting three separate stages in a radio transmitter, any additional number of circuits which it may be desired to protect, may be protected by merely adding extra gas discharge tubes in circuits similar to those shown for 50, 52 and 54 and connected to a resistor in the circuit to be protected having a voltage drop thereacross which varies in the desired sense. Furthermore, while the foregoing description has been predicated on the use of the filamentary type tubes utilizing a center tapped filament winding on transformer 12, indirectly heated cathode type tubes may be used in the transmitter, the protective resistances 40, 42 and 44 being placed in series between the cathode returns of the various stages and a common ground connection.

What is claimed is:

1. A circuit breaker arrangement including a number of resistors, one individual to each of a number of circuits to be protected, a gas discharge tube associated with each of said resistors, said tubes each having a control electrode and an anode, a connection from the control electrode of each of said tubes to its associated resistor and connections from said anodes through a common winding of a relay to a source of potential, said relay having normally closed back contacts connected between all of said circuits and another source of potential.

2. A circuit breaker arrangement including a number of resistors, one individual to each of a number of circuits to be protected, a gas discharge tube associated with each of said resistors, said tubes each having a control electrode and an anode, a connection from the control electrode of each of said tubes to its associated resistor and connections from said anodes through a common

winding of a relay to a source of potential, said relay having normally closed back contacts connected between all of said circuits and another source of potential, and means for disconnecting and reconnecting said source of anode potential to reset said circuit breaker arrangement.

3. A circuit breaker arrangement including a number of resistors, one individual to each of a number of circuits to be protected, a gas discharge tube associated with each of said resistors, said tubes each having a control electrode and an anode, a connection from the control electrode of each of said tubes to its associated resistor so arranged that as the current through said resistor increases, said control electrode becomes positive, means for applying a standing negative bias to each of said control electrodes and connections from said anodes through a common winding of a relay to a source of potential, an indicator lamp in each of the last-mentioned connections, said relay having normally closed back contacts connected between all of said circuits and another source of potential.

4. A circuit breaker arrangement including a number of resistors, one individual to each of a number of circuits to be protected, a gas discharge tube associated with each of said resistors, said tubes each having a control electrode and an anode, a connection from the control electrode of each of said tubes to its associated resistor to render said control electrode positive as the current through said resistor increases, means for applying a standing negative bias to each of said control electrodes and connections from said anodes through a common winding of a relay to a source of potential, an indicator lamp in each of the last-mentioned connections, said relay having normally closed back contacts connected between all of said circuits and another source of potential, and means for disconnecting and reconnecting said source of anode potential to reset said circuit breaker arrangement.

5. In a radio transmitter having a number of separate stages, a connection from a power supply for said transmitter to each of said stages, said connection including normally closed back contacts of a relay, individual resistors connected from each of said stages to ground, a number of gas discharge tubes each having a control electrode and an anode, a connection from each of said control electrodes to one of said resistors, connections from all of said anodes through a winding of said relay to a source of potential, means for biasing said control electrodes to render said tubes inactive for normal current flow through said resistors, said control electrode connections being arranged whereupon an increase in current through any of said resistors above a predetermined value will cause the associated gas tube to ignite, the anode current flowing through said relay winding acting to open said normally closed contacts.

6. In a radio transmitter having a number of separate stages, a connection from a power supply for said transmitter to each of said stages, said connection including normally closed back contacts of a relay, individual resistors connected from each of said stages to ground, a number of gas discharge tubes each having a control electrode and an anode, connections from each of said control electrodes to one of said resistors, connections from all of said anodes through a winding of said relay to a source of potential, means for so biasing said control electrodes to

render said tubes inactive for normal current flow through said resistors, said control electrode connections being arranged whereupon an increase in current through any of said resistors above a predetermined value will cause the associated gas tube to ignite, the anode current flowing through said relay winding acting to open said normally closed contacts, and means for disconnecting and reconnecting said source of anode potential to extinguish said ignited gas tube.

7. In a radio transmitter having a number of separate stages, a connection from a power supply for said transmitter to each of said stages, said connection including normally closed back contacts of a relay, individual resistors connected from each of said stages to ground, a number of gas discharge tubes each having a control electrode and an anode, connections from each of said control electrodes to one of said resistors, connections from all of said anodes through a winding of said relay to a source of potential, means for biasing said control electrodes to render said tubes inactive for normal current flow through said resistors, said control electrode connections being arranged to ignite any of said tubes upon an increase in current above a predetermined value through the associated resistor, the anode current flowing through said relay winding acting to open said normally closed contacts, and an indicator lamp in each of the connections from said anodes to said relay winding.

8. In a radio transmitter having a number of separate stages, a connection from a power supply for said transmitter to each of said stages, said connection including normally closed back contacts of a relay, individual resistors connected from each of said stages to ground, a number of gas discharge tubes each having a control electrode and an anode, connections from each of said control electrodes to one of said resistors, connections from all of said anodes through a winding of said relay to a source of potential, means to bias said control electrodes to render said tubes inactive for normal current flow through said resistors, said control electrode connections being arranged to render any one of said tubes active upon an increase in current above a predetermined value through the corresponding resistors, the anode current flowing through said relay winding acting to open said normally closed contacts, means for simultaneously disconnecting and reconnecting said power supply and said source of potential to reinactivate said activated tubes and reactivate said transmitter, and an indicator lamp in each of the connections from said anodes to said relay winding.

9. An arrangement for disconnecting a power supply from a plurality of circuits upon the current in any one of said circuits exceeding a value predetermined therefor, said arrangement including a plurality of gaseous discharge tubes each having a cathode, a control electrode and an anode, a source of direct operating potential for said tubes, a relay having a winding connecting said source of direct operating potential across the anode-cathode path of all of said tubes and a normally closed contact structure, contacts of said structure being interposed between said power supply and all of said circuits, a resistive element in each of said circuits responsive to said current flow therein, and means to connect the resistive element in each of said circuits to the control electrode of a corresponding tube to render the same conductive upon the current flowing in said resistor exceeding a predetermined

value therefor to actuate said relay and open said contacts to disconnect said power supply from said circuits.

10. An arrangement for disconnecting a power supply from a plurality of circuits upon the current in any one of said circuits exceeding a value predetermined therefor, said arrangement including a plurality of gaseous discharge tubes each having a cathode, a control electrode and an anode, a source of direct operating potential for said tubes, a relay having a winding connecting said source of direct operating potential across the anode-cathode path of all of said tubes and a normally closed contact structure, contacts of said structure being interposed between said power supply and all of said circuits, a resistive element in each of said circuits responsive to said current flow therein, means to connect the resistive element in each of said circuits to the control electrode of a corresponding tube to render the same conductive upon the current flowing in said resistor exceeding a predetermined value therefor to actuate said relay and open said contacts to disconnect said power supply from said circuits, and means connected to said relay winding to provide an initial surge of relatively high current therethrough to increase the speed of operation of said relay.

11. An arrangement for disconnecting a power supply from a plurality of circuits upon the current in any one of said circuits exceeding a value predetermined therefor, said arrangement including a plurality of gaseous discharge tubes each having a cathode, a control electrode and an anode, a source of direct operating potential for said tubes, a relay having a winding connecting said source of direct operating potential across the anode-cathode path of all of said tubes and a normally closed contact structure, contacts of said structure being interposed between said power supply and all of said circuits, a resistor in each of said circuits responsive to said current flow therein, means to connect the resistor in each of said circuits to the control electrode of a corresponding tube to render the same conductive upon the current flowing in said resistor exceeding a predetermined value therefor to actuate said relay and open said contacts to disconnect said power supply from said circuits, and means interposed in the anode circuit of said tubes to disconnect and reconnect said source of operating potential to render the conductive tube inactive to reset said arrangement.

12. An arrangement for disconnecting a power supply from a plurality of circuits upon the current in any one of said circuits exceeding a value predetermined therefor, said arrangement including a plurality of gaseous discharge tubes each having a cathode, a control electrode and an anode, a source of direct operating potential for said tubes, a relay having a winding connecting said source of direct operating potential across the anode-cathode path of all of said tubes and a normally closed contact structure, contacts of said structure being interposed between said power supply and all of said circuits, a resistor in each of said circuits responsive to said current flow therein, means to connect the resistor in each of said circuits to the control electrode of a corresponding tube, means to bias said tubes to render the same conductive only upon the current flowing in the corresponding resistor exceeding a predetermined value therefor to actuate said relay and open said contacts to disconnect said power supply from said circuits, and a filter circuit comprising a series resistor and a shunt capacitor connected to said relay winding to provide an initial surge of relatively high current therethrough to increase the speed of operation of said relay and thereafter to limit the current to the normal value.

GEORGE D. HANCHETT, JR.

REFERENCES CITED

The following references are of record in the file of this patent:

UNITED STATES PATENTS

Number	Name	Date
1,506,275	Stevenson	Aug. 26, 1924
1,671,205	Oswald	May 29, 1928
1,743,443	Fearing	Jan. 14, 1930
2,064,192	Brown	Dec. 15, 1936
2,079,446	Goldsmith	May 4, 1937