Sept. 11, 1956 A. VENDITTY 2,762,369

HYPODERMIC INJECTOR WITH ADJUSTABLE IMPACT PLUNGER

Filed Sept. 7, 1954

FIG. 1

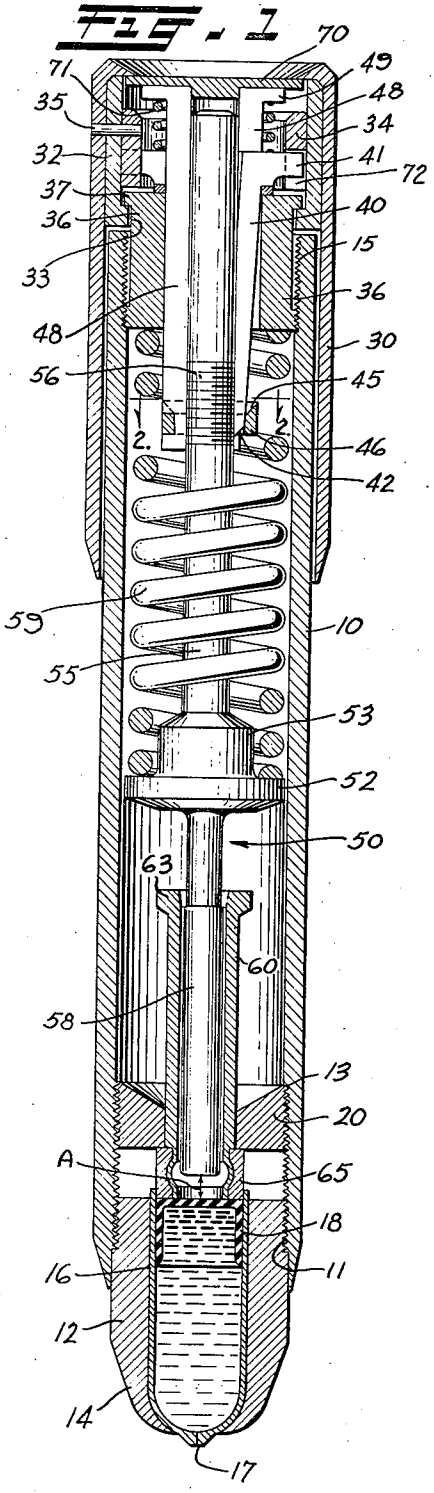

FIG. 5

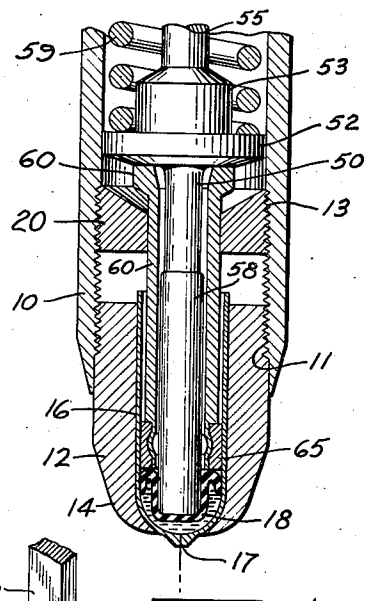

FIG. 3

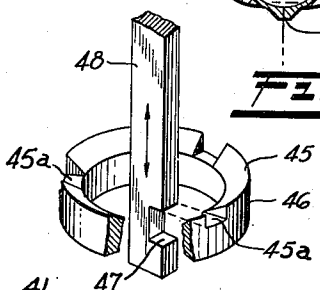

FIG. 4

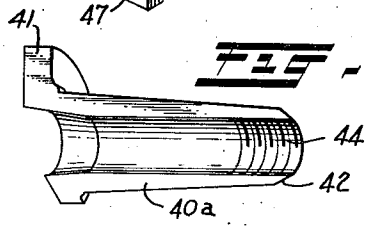

FIG. 2

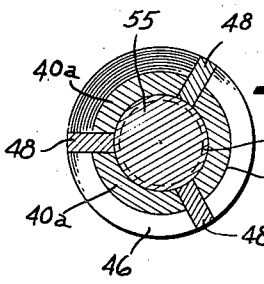

INVENTOR.
Anthony Venditty
BY
Bair, Freeman & Molinare

United States Patent Office

2,762,369

Patented Sept. 11, 1956

1

2,762,369

HYPODERMIC INJECTOR WITH ADJUSTABLE IMPACT PLUNGER

Anthony Venditty, Detroit, Mich., assignor to R. P. Scherer Corporation, Detroit, Mich., a corporation of Michigan

Application September 7, 1954, Serial No. 454,446

4 Claims. (Cl. 128—173)

This invention relates to a needleless hypodermic injector for injecting fluid into the human or animal body and relates more particularly to a compact, light-weight instrument of simplified construction. It has been demonstrated that the most successful injectors of this type are those capable of discharging a minute stream or jet of liquid from an ampule at two different pressure stages sequentially. The initial high-pressure discharge causes the jet stream to distend the skin and force the liquid to a predetermined depth beneath the surface, depending upon the magnitude of the pressure. After the opening has been produced, the pressure of the stream is immediately reduced to a lower, second stage for completing transfer of the remainder of the liquid from the ampule. The two pressure stages are generally produced by a spring-actuated dual plunger assembly comprising a primary plunger of small diameter slidably mounted within a secondary plunger having a diameter equal to that of the flexible rubber-like follower or stopper within the bore of the ampule. The follower is cup-shaped and is adapted to expel liquid through the minute orifice in the end of the ampule as it advances down the bore. As the power springs expand, the primary plunger exerts a force against the central portion of the follower to distend that portion a short distance into the ampule and simultaneously eject a small amount of liquid from the orifice under high pressure. After the primary plunger has traveled to the end of its stroke, the secondary plunger engages the entire area of the bottom of the follower and moves the follower down the bore of the ampule to complete the injection at reduced pressure.

The instrument employed for the two-stage injection contains a plurality of springs, usually five, to provide the quick acting power of high magnitude required to produce high pressure discharge. This instrument is described in detail in the copending application of R. P. Scherer, Serial No. 170,101, filed June 24, 1950.

The present invention is directed to a very small, compact instrument having considerably less space in the body thereof for power means. It is a primary object of the invention to provide such a small, compact instrument which has primary and secondary plungers capable of producing two different pressure stages just like the prior instruments, but which employs power means of substantially less magnitude for propulsion of the plungers.

Another object is to provide an instrument in which the initial pressure stage is variable in magnitude by adjusting the impact force with which the primary plunger strikes the follower in the ampule.

A further object is the provision of novel compact means for storing and releasing the power required to propel the primary and secondary plungers.

These and other objects of the invention will become apparent from the following description and the accompanying drawings, in which:

Figure 1 is a longitudinal sectional view of the instrument of the invention.

2

Figure 2 is a section taken along the line 2—2 of Figure 1.

Figure 3 is a perspective view of the collet ring and one of the draw bars comprising part of the power means within the instrument.

Figure 4 is a perspective view of one of the collets comprising part of the power means of the instrument.

Figure 5 is a view similar to Figure 1 in which the plungers have been advanced to the point where all of the liquid has been expelled from the ampule.

Referring now to the details of the instrument, numeral **10** designates an elongated body, preferably cylindrical, having reamed portions **11** and **15** at either end which are threaded. The lower end of the instrument, as shown in Figure 1, is fitted with a removable ampule holder **12** having a rough-surfaced nose **14**. The nose may be coated with an abrasive or roughened in any suitable manner to prevent the instrument from slipping on the skin during an injection. The ampule **16** fits inside the ampule holder **12** and has a spherical nose terminating in a pointed end **17** provided with a minute discharge orifice through which liquid is expelled. A rubber follower **18**, made from an oil resistant rubber, fits within the ampule to seal off the liquid contents from the air and to act as a piston for discharging the fluid from the ampule when pressure is applied thereto.

The opposite end of the body is fitted with a winding sleeve **30** adapted to rotate about a collet housing **36** which is screwed into the end **15** of the body **10**. The winding sleeve **30** has a spacing sleeve **32** fitted with an inwardly turned flange **33** which is adapted to overlap the flange **37** extending outwardly from the collet housing **36**, to prevent axial movement of the sleeve in one direction. The sleeve **30** rotates on a thrust bearing **72** between the collet **40** and the collet housing **36**. A locking ring **34** is fitted inside of the spacing sleeve and is adapted to lock with the flange of the collet so the ring and collet will rotate together. The collet flange and the ring may contain complementary notches for this purpose. The winding sleeve **30**, the spacing sleeve **32** and the locking ring **34** are secured together by means of a pin **35** so that rotation of the winding sleeve **30** will turn the collet **40**. The collet **40**, rotatably mounted within the collet housing **36**, comprises collet segments **40*a*** (Figure 4) which are assembled alternately with draw bars **48**.

An end bearing or end plug **20** is screwed into the lower threaded end **11** of the instrument. The bearing **20** serves as a support for the secondary plunger **60**, which is slidably mounted in the central opening therein. One end of the secondary plunger **60** has a flange **63**. The other end of the plunger **60** carries a sleeve **65** of enlarged diameter which prevents the plunger from moving inwardly past the bearing **20**. In other words, the secondary plunger **60** can move only in a downward direction from the position shown in Figure 1. The height of the sleeve **65** is equal to the distance between the bearing **20** and the top of the follower **18** within the ampule. The sleeve **65** is adapted to slide within the bore of the ampule to advance the follower **18**. A primary plunger **50**, of smaller diameter than the secondary plunger **60**, fits within the bore of the plunger **60** and is adapted to slide beyond the end thereof to distend the central area of the top of the follower **18** when force is applied thereto. The piston end of the plunger **50** is designated by the numeral **58** and is the portion which is adapted to slide within the secondary plunger and engage the ampule follower. The primary plunger **50** has a spring seat **52** formed integrally therewith which slides axially within the body **10**. The spring seat **52** has a boss **53** projecting therefrom which terminates in a long shaft **55**, the outer end of which is threaded as indicated at **56**. The spring seat **52** serves to confine the

spring 59 within the upper end of the body 10, the top of the spring bearing against the collet housing 36. The threaded portion 56 of the primary plunger fits within the collet and draw bar assembly, which is best illustrated in Figures 3 and 4. One of the three collet sections 40*a* comprising the collet 40 is illustrated in Figure 4 and has an outwardly extending flange 41 at one end and a tapered wall having internal threads 44 at the opposite end. The outer edge of the threaded end terminates in a tapered surface 42. The collet segments 40*a* are assembled with draw bars 48 interposed therebetween, as best shown in Figure 2, the assembly forming a sleeve of circular cross section. The threads 44 of the collet are adapted to engage the threads 56 on the end 55 of the primary plunger 50 when the collet is closed. The collet ring 46 normally surrounds the outer end of each of the collet segments so that the threads 44 are engaged with threads 56. The draw ring 46 may be moved back and forth axially by means of the draw bars 48 which have notches 47 that cooperate with the slots 45*a* in the ring to connect the draw bars with the ring. A release button 70, which consists of a disc having a boss projecting from the center thereof, fits within the end of the winding sleeve 30 with the boss inserted within the circle defined by the inner circumference of the draw bars and collets. A spring 71 normally forces the draw bars 48 away from the collet, as shown in Figure 1, said spring bearing against the outer surface of the collet flange 41 and the inner surface of the draw bar flanges 49. In this position the collet ring 46 encircles the ends of the collets and draw bars. By means of the release button 70, axial pressure may be applied to all three draw bars simultaneously, which causes the collet ring 46 to which the draw bars are connected to be pushed beyond the end of the collet 40. It will be noted that the draw ring 46 has a tapered surface 45 which is tapered at the same angle as the terminating portion 42 of the collet. Thus, when the draw ring 46 is pushed downwardly, the surface 42 may slide past the surface 45 to permit the threads 44 in the collet to disengage from the threads 56 in the end of the shaft 55.

In operating the instrument the winding sleeve 30 is turned in a clockwise direction and the threads 44 on the collet, which are engaged with the threads 56 on the end of the shaft 55, lift the primary plunger 50 until the spring 59 has been fully compressed between the collet housing 36 and the spring seat 52. Normally, the collet segments 40*a* are engaged with the shaft 55 due to the action of spring 71 which keeps the draw bars raised, which in turn causes the draw ring 46 to embrace the lower end of the collet and force the threads 44 into engagement with the threads 56. When the spring 59 is fully compressed, an ampule 16 is placed within the ampule holder 12 which is screwed into the end of the injector. The ampule holder 12 is screwed up to the point where the sleeve 65 just engages the follower 18. If less than the total content of the ampule is to be injected, the ampule holder may be turned further into the instrument to predischarge any desired portion of the liquid contents of the ampule by causing the sleeve 65 to force the follower 18 down into the ampule. The volume of liquid discharged may be shown by graduations marked on body 10 and the holder 12.

The distance between the primary plunger 58 and the follower 18 designated at A in Figure 1 can be regulated by adjustment of the winding sleeve. When the spring is fully compressed the distance between the primary plunger and the follower, and thus the impact with which the follower is struck, is greatest. It may be reduced to any desired point by rotating the winding sleeve in a counterclockwise direction until the primary plunger 58 engages the follower 18, which provides no impact at all. Since the pressure at which the liquid is discharged depends upon the force with which the primary plunger 58 strikes the ampule follower 18, this pressure may be adjusted by regulating the distance A. The greater the impact or distance A, the greater the pressure at which the liquid is ejected. For intramuscular injections which are to go deep below the skin, maximum impact is desired. For subcutaneous injection, less impact is desired. The amount of impact may be made visible to the operator by providing complementary graduations on the winding sleeve 30 and body 10 indicating the rotational position of the sleeve with respect to the body and, consequently, the axial position of the primary plunger 50.

To release the energy in the compressed spring 59, the release button 70 is depressed against the force of the coil spring 71. This causes the draw bars 48 to move downwardly, thus sliding the draw ring 46 off of the end of the collet 40. The force of the spring 59 exerted against the seat 52 of the primary plunger 50 causes the threads 56 to slide out of the threads 44 in the collet, and the collet segments 40*a* are moved radially by this force so that they become recessed behind the inner surfaces of the draw bars. In this way a clear opening is provided within the draw bars and the collet, and the primary plunger 58 is forced downwardly by expansion of the spring 59. The primary plunger is rapidly accelerated because it carries no load until it has traveled through the distance A. Thus, it quickly builds up inertia and strikes the follower 18 a sharp blow. Care must be taken to keep the release button depressed until the spring has been fully released or else the threads will tend to reengage while the primary plunger is in motion.

The primary plunger 58 will distend the central portion of the follower 18 to eject liquid at high pressure until the spring seat 52 engages the flange 63 of the secondary plunger 60. At this point both the primary plunger and the secondary plunger descend together until the ampule follower has been forced into the end of the ampule and all of the liquid contents discharged therefrom, as illustrated in Figure 5.

When the injection has been completed, the release button is permitted to assume its normal position whereupon the draw ring 46 slides over the ends of the collet to once again engage the threads thereof with the threads 56 in the end of the shaft 55. The winding sleeve 30 is then turned in a clockwise direction once again to compress the spring and cause primary plunger 50 to be retracted within the instrument. It will be noted that it is not necessary to "back off" the collets before rewinding, as is required in prior instruments. The ampule holder 12 may then be removed from the end of the instrument, the used ampule discarded and a new one put in.

From the foregoing description it becomes apparent that the invention provides a novel construction for a hypodermic injector which is characterized by a novel means for storing and releasing power applied to the primary and secondary plungers. Furthermore, because the distance between the primary plunger and the ampule follower is variable, the pressure at which the liquid is discharged during the primary state is fully adjustable. Subsequently, when the secondary plunger engages the follower, the pressure is reduced by reason of the fact that the area is increased without any increase in the force imposed by the spring.

Various modifications in the structure of the instrument will occur to those skilled in the art without departing from the spirit and scope of the invention. It is, therefore, not my intention to limit the invention to the forms illustrated other than as necessitated by the scope of the appended claims.

I claim as my invention:

1. In a hypodermic injector, an assembly comprising an elongated body, an ampule holder detachably connected to one end thereof and adapted to hold an orificed ampule having liquid and a follower in the bore thereof, primary and secondary plungers mounted within said body

for engaging and propelling said follower to discharge liquid from said ampule at two different sequential pressures, said primary plunger being associated with power means within said body and adapted to propel the secondary plunger after traveling an initial distance, said primary plunger being adjustable with respect to said follower to permit varying the distance therebetween, thus varying the force of impact imposed upon the follower by the primary plunger, said power means comprising a coil spring interposed between the end of said body and said plunger head, a screw disposed within said spring and fixed to said head for compressing the spring, latch means manually rotatable within said body and having threads adapted to engage the threads of said screw to constrain it against axial movement and to disengage the threads of said screw to suddenly release the energy of the spring.

2. In a hypodermic injector, an assembly comprising an elongated body, an ampule holder detachably connected to one end thereof and adapted to hold an orificed ampule having liquid and a follower in the bore thereof, a plunger slidably mounted within the body and adapted to engage and propel said follower to discharge said liquid from the ampule, said plunger having a head associated with power means within said body for propelling said plunger, said power means comprising a coil spring interposed between the end of said body and said plunger head, a screw disposed within said spring and fixed to said head for compressing the spring, latch means manually rotatable within said body and having threads adapted to engage the threads of said screw to constrain the screw

against axial movement and to disengage the threads of said screw to suddenly release the energy in the spring.

3. The injector of claim 2 wherein said latch means comprises an internally threaded collet having a plurality of segments surrounding said screw, a draw ring adapted to embrace said segments to bring them into engagement with said screw threads, draw bars disposed between said segments for actuating said draw ring, and means accessible from outside said body for actuating said draw bars to release said spring.

4. The injector of claim 2 wherein said latch means comprises an internally threaded collet having a plurality of segments surrounding said screw, said collet having a radial flange at the upper end thereof, a draw ring adapted to embrace said segments to bring them into engagement with said screw threads, draw bars disposed between said segments having the lower ends thereof connected to said draw ring and terminating at their upper ends in radially extending flanges, means engaging said upper ends for actuating said draw bars to move said ring from the collet and permit the collet threads to disengage the screw threads, and compressible means disposed between said collet flange and said draw bar flanges adapted normally to hold the draw ring in collet-embracing position.

References Cited in the file of this patent

UNITED STATES PATENTS

2,669,230	Smoot	Feb. 16, 1954
2,704,543	Scherer	Mar. 22, 1955