3 Sheets—Sheet 1.

Z. S. STOCKING & D. LIPPY.

CLOVER-THRASHING AND HULLING-MACHINES.

No. 193,786. Patented July 31, 1877.

Fig. 1.

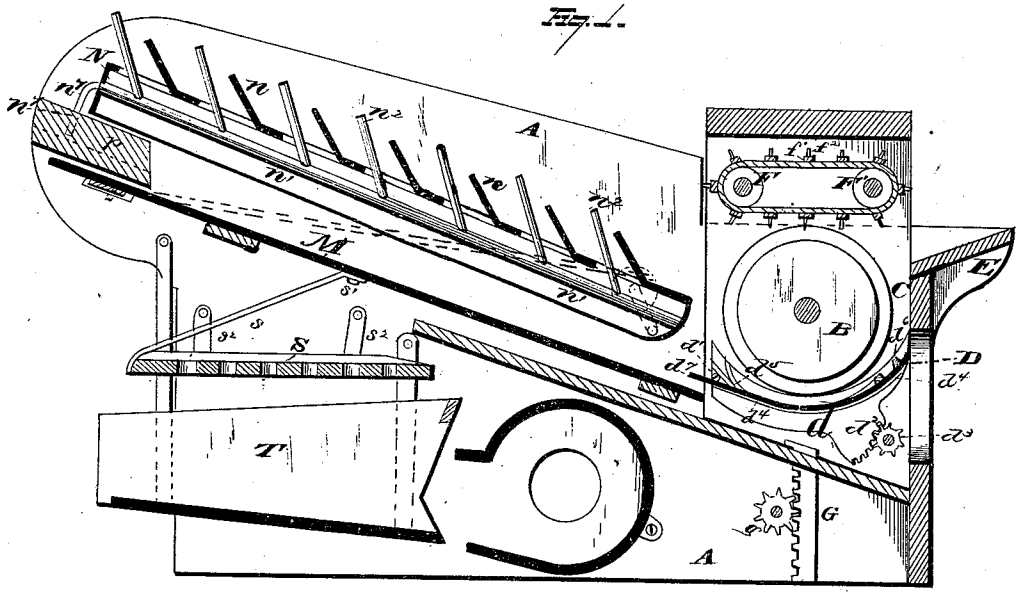

WITNESSES

E. L. Nottingham

A. W. Bright

INVENTOR

Z. S. Stocking.

David Lippy.

By Leggett & Leggett, ATTORNEYS

N. PETERS, PHOTO-LITHOGRAPHER, WASHINGTON, D. C.

3 Sheets—Sheet 2.

Z. S. STOCKING & D. LIPPY.

CLOVER-THRASHING AND HULLING-MACHINES.

No. 193,786. Patented July 31, 1877.

Fig. 2.

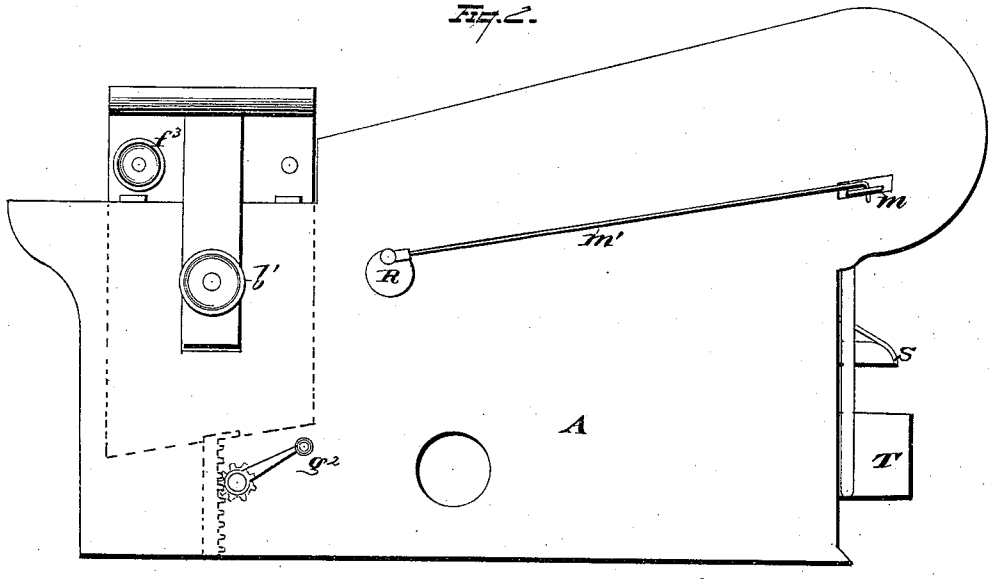

Fig. 3.

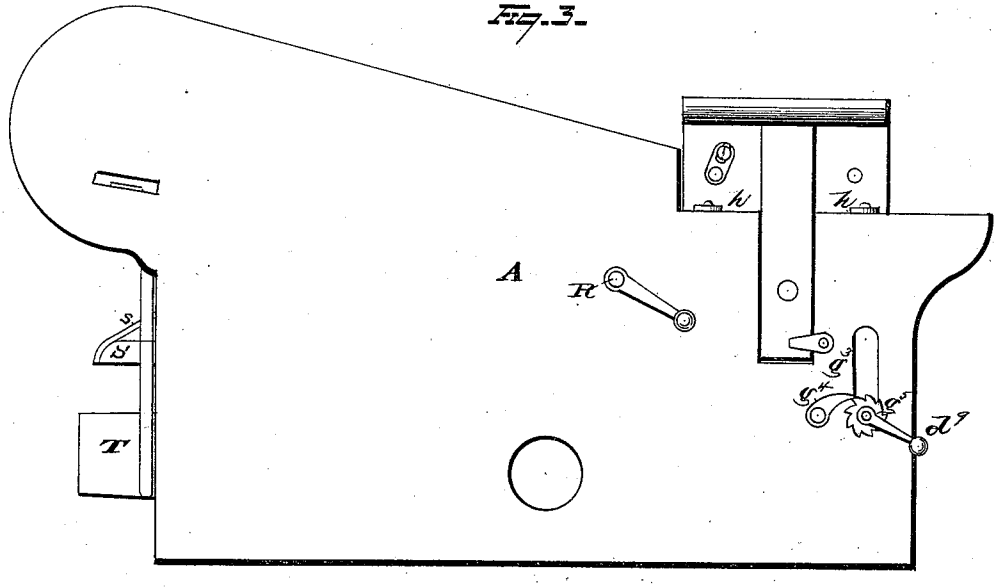

WITNESSES

Ed. F. Nottingham

A. W. Bright.

INVENTOR

Z. S. Stocking.

and

David Lippy

By Leggett and Leggett, ATTORNEYS

N. PETERS, PHOTO-LITHOGRAPHER, WASHINGTON, D. C.

3 Sheets—Sheet 3.

Z. S. STOCKING & D. LIPPY.

CLOVER-THRASHING AND HULLING-MACHINES.

No. 193,786. Patented July 31, 1877.

Fig. 4.

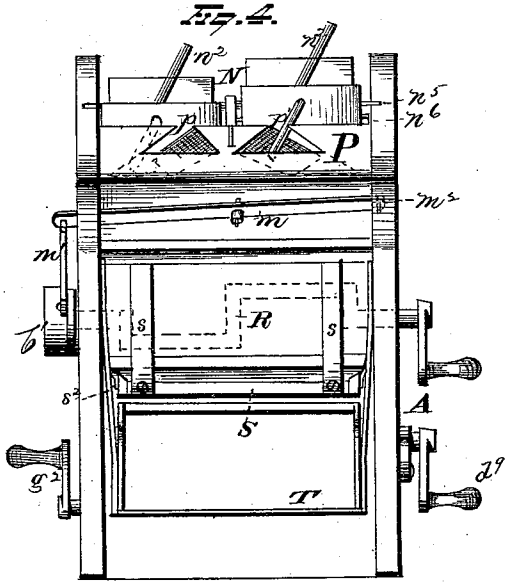

Fig. 6.

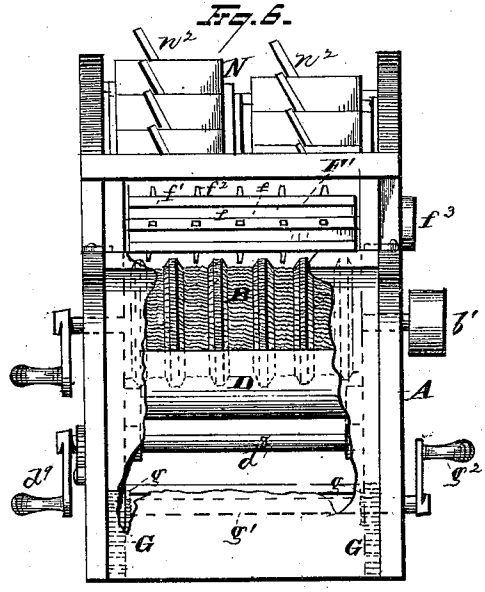

Fig. 5.

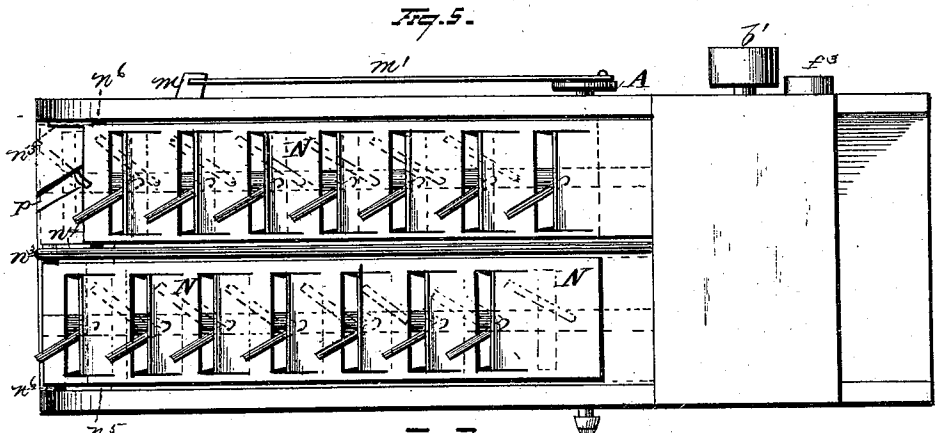

Fig. 7.

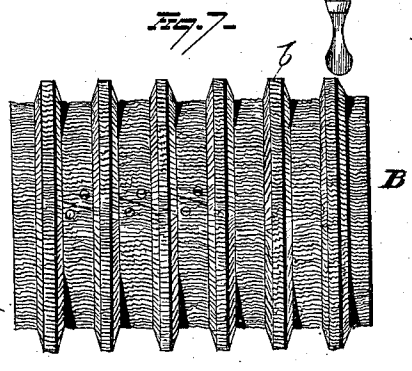

WITNESSES

Ed. F. Nottingham

A. W. Bright.

INVENTOR

Z. S. Stocking and D. Lippy

By Leggett and Leggett, ATTORNEYS

N. PETERS, PHOTO-LITHOGRAPHER, WASHINGTON, D. C.

UNITED STATES PATENT OFFICE.

ZALMON S. STOCKING, OF CLEVELAND, AND DAVID LIPPY, OF MANSFIELD, OHIO.

IMPROVEMENT IN CLOVER THRASHING AND HULLING MACHINES.

Specification forming part of Letters Patent No. **193,786**, dated July 31, 1877; application filed May 24, 1877.

To all whom it may concern:

Be it known that we, ZALMON S. STOCKING and DAVID LIPPY, the former of the city of Cleveland and the latter of Mansfield, in the county of Richland and State of Ohio, have invented certain new and useful Improvements in Thrashing and Clover-Hulling Machines; and we do hereby declare the following to be a full, clear, and exact description of the invention, such as will enable others skilled in the art to which it pertains to make and use it, reference being had to the accompanying drawings, which form part of this specification.

Our invention relates to a combined grain-thrasher and clover-huller; and consists in certain improvements, fully described and claimed hereinafter.

In the drawing, Figure 1 represents a longitudinal and vertical section of a machine embodying our invention. Figs. 2 and 3 repsent opposite side views of the same. Fig. 4 is a rear-end view. Fig. 5 shows a top view of the separator. Fig. 6 is a front-end view. Fig. 7 is a detached view of the cylinder.

The device herein described is an improvement on the machine for which Letters Patent No. 182,318, dated September 19, 1876, were granted to us.

A is a suitable frame, to which the various parts of the machine are attached. B is the thrashing-cylinder. It is provided with a series of collars or elevations, *b*, which may be of any suitable size or form. The sides of the collars may be inclined, as shown in the drawing, or they may be at right angles to the main surface of the cylinder. There may be a greater or less number of collars, and their distance from each other may vary. The surface of the cylinders and collars is corrugated or roughened to a greater or less extent. The cylinder is, preferably, constructed in sections, so that if any part is worn out it can be easily replaced. It may, however, be formed of one piece. Said cylinder is journaled in the frame C, which is vertically adjustable. D is the concave, provided with teeth d^6. It is secured on each side in a slot of the swinging arms *d*. Said swinging arms are pivoted at d^1 to the frame C, and are further provided with slots d^4 and d^5 for the insertion of the receiving-plate d^7. The swinging arms may have any number of slots, so that the receiving-plate can be placed in any desired position. Each swinging arm *d* also carries a segmental rack, d^2, which gears with a pinion, d^3, on the shaft d^8. By turning the crank d^9 in the proper direction the concave may be adjusted nearer to or farther from the thrashing-cylinder, as the revolution of the pinion d^3 operates to effect said result. By this arrangement the operation of this portion of the machine can be regulated, and the cleaning of the parts, in case they become foul, is facilitated.

F F′ are two rollers journaled in the frame C over the thrashing-cylinder. Around them passes the endless-apron feeder, which consists of the endless apron *f*, upon which are secured the slats or bars f^1, carrying the teeth f^2. The teeth of the feeder extend or pass between the sides of the collars on the cylinder when the machine is in operation. They are, preferably, roughened on their surfaces.

The machine is operated by power applied to the shaft of the cylinder, and it may be transmitted from thence to the feeder by means of belt-and-pulley gearing, or in any other suitable and well-known manner. The feeder revolves in an opposite direction from, and at a lower rate of speed than, the cylinder, for the purpose of effecting the necessary amount of friction or rubbing action to feed the machine, and to feed and head and hull the clover.

E is the feeding-board. To the side pieces of the frame C are attached the racks G, one on each side. A pinion, *g*, on the shaft g^1 engages with each rack, and by turning the handle g^2 on said shaft in the proper direction the whole frame C, in which the cylinder and feeder-rollers are journaled, and to which the concave and its adjusting mechanism are attached, is elevated or depressed, as may be required. The slot g^3 in the main frame of the machine permits the shaft of the concave-adjusting mechanism to move in the same when the frame C is elevated or lowered. The pawl g^4 and ratchet-wheel g^5 serve to hold the concave in any position in which it may be placed. Bolts *h*, or other suitable means,

are provided for holding the frame C in position.

When the machine is to be used for clover, the frame C, with its contained mechanism, is placed in its lowest position, and the cylinder is revolved in such a direction as to be called "overshot," the clover being fed to the upper face of the cylinder, and passes between it and the endless-belt feeder, which latter serves the function of a feeder in addition to the function of a header and huller, its action being similar to that of the lower concave.

When used for grain, the frame C is elevated, so that the grain can be fed to the lower face of the cylinder, and therefore passes between it and the lower concave, the cylinder in this instance revolving, of course, in an opposite direction from the former.

N is the separator, which may consist of two or more sections. Each section consists of a frame of suitable material, provided with the slanting plates n, the series of them forming and serving the function of a rake. They may be placed at any effective angle. Each section also carries a shaft or rod, n^1, journaled in each end of the section, which rod is provided with a series of teeth, n^2, of wood or suitable metal, placed at an angle with the rod. This shaft or rod, with its teeth, may be called the "agitator." These teeth project between the slanting plates, and have an oscillating or vibrating motion, as will be hereinafter described.

Between each two sections is placed a division plate or board, n^3, which prevents the falling through of the straw, and serves as a means for the attachment of guide-pieces n^4. To the main frame are also attached short guide-pieces n^5. To the upper end of each section, on each side, are attached short grooved projections n^6, in which the guides n^4 and n^5 fit, whereby the upper end of each section is guided in its movements.

P is a slotted guide-piece, having the dovetail slots p p', running in a diagonal direction, as shown. The upper end of each rod n^1 is provided with a finger or bent projection, n^7, which extends into said slots p.

R is a crank, bent after passing through frame and before entering the section, and again bent after passing through and before entering the adjoining section, as shown in the drawings. This crank, therefore, moves one section forward while it moves the adjoining section backward, and depresses the crank end of one while it elevates the other.

A given point in the lower end of each section describes the line of a circle when the machine is in operation. As the sections move longitudinally the shafts or rods n^1 are oscillated on their axes through the medium of the dovetail slots p and fingers n^7, which causes the agitators n^2 to vibrate laterally, as indicated in dotted lines in Fig. 5. These described movements of the separator operate to carry forward the straw and to effect the separation of the grain.

M is the upper shaking-board, situated immediately below the separator, which has a longitudinal reciprocating movement imparted to it from the same shaft that operates the separator through the medium of lever m, pivoted to the under side of the shaking-board, and connecting-link m^1, the latter being eccentrically pivoted to a disk on the end of said shaft or crank-shaft R. The lever m is hinged or pivoted to the frame of the machine at m^2. On this shaking-board the clover which has passed through the separator is carried back to the cylinder, and undergoes a second operation. Attached to this upper shaking board or deck, at s^1 s^1, by arms s s, is the lower or perforated shaking-board S, which is freely pivoted or suspended to each side frame of the machine by rods or straps s^2. It moves in the same manner and direction as the upper shaking-board, and, as is evident, receives its motion from the same.

Next below the perforated shaking-board is placed the shoe T, which serves to carry the screens for cleaning, and has a lateral or shaking motion when the machine is operated.

The teeth of the endless-apron feeder and concave may be of iron or of wood, and the apron may be of leather or cloth.

The separator may be constructed of iron or of wood, or both materials may be employed.

What we claim is—

1. A thrashing-cylinder formed with a series of annular shoulders, whose surfaces, and also the surfaces of their cylinder-interspaces, are roughened or corrugated, substantially as described.

2. A thrashing-cylinder having a series of detachable annular shoulders, whose surfaces, together with the cylinder-spaces between the shoulders, are made roughened, the said cylinder-spaces being formed sectional, each partly in piece with the two consecutive shoulders between which it intervenes, substantially as described.

3. In a thrashing and hulling machine, a feeder and header or concave, consisting of an endless apron passing over rollers, and provided with rows of teeth, placed to pass between the collars of the thrashing-cylinder, substantially as described.

4. The combination, with a thrashing-cylinder having a series of annular shoulders or collars, of a feeder and concave, consisting of an endless apron passing over rollers, and provided with rows of teeth, which are so placed as to pass between the projections of said cylinder, substantially as and for the purpose specified.

5. A thrashing-cylinder adapted to be adjusted, relative to the feed end of the shaker, substantially as described.

6. In a thrashing and hulling machine, the swinging arms d, provided with several grooves, d^4 and d^5, for the insertion and adjustment of the receiving-plate d^7 and attachment of the concave D, substantially as described.

7. The combination of a thrashing-cylinder, a feeder and concave, and a lower concave, with a frame, in which said parts are housed, and which is capable of vertical adjustment relative to the feed end of the shaker, substantially as described.

8. The combination, with the adjustable frame carrying the thrashing-cylinder, of the rack and pinion-shaft, actuating the same in its vertical movement, substantially as described.

9. The combination, with the swinging arms *d*, provided with several grooves, of the receiving-plate d^7, adjustable in said grooves, substantially as described.

10. A separator constructed in one or more sections, each section provided with a series of slanting plates, and a series of laterally-vibrating teeth extending between said plates, substantially as and for the purpose described.

11. A separator constructed in one or more longitudinal sections, each section provided with a series of slanting plates and openings between said plates, through which project a series of teeth attached to a longitudinal rod or shaft, by which the teeth are laterally vibrated, substantially as and for the purpose specified.

12. A separator constructed in one or more sections, each section provided with a series of slanting plates, and a series of laterally-vibrating teeth extending between said plates, in combination with the groove *p* and finger n^7, substantially as and for the purpose described.

In testimony whereof we have signed our names to this specification in the presence of two subscribing witnesses.

ZALMON S. STOCKING.
DAVID LIPPY.

Witnesses:
JAMES JACKSON,
GEORGE W. STATLER.