(No Model.) 2 Sheets—Sheet 1.

F. H. DANIELS.

ROLLING MILL APPARATUS.

No. 390,285. Patented Oct. 2, 1888.

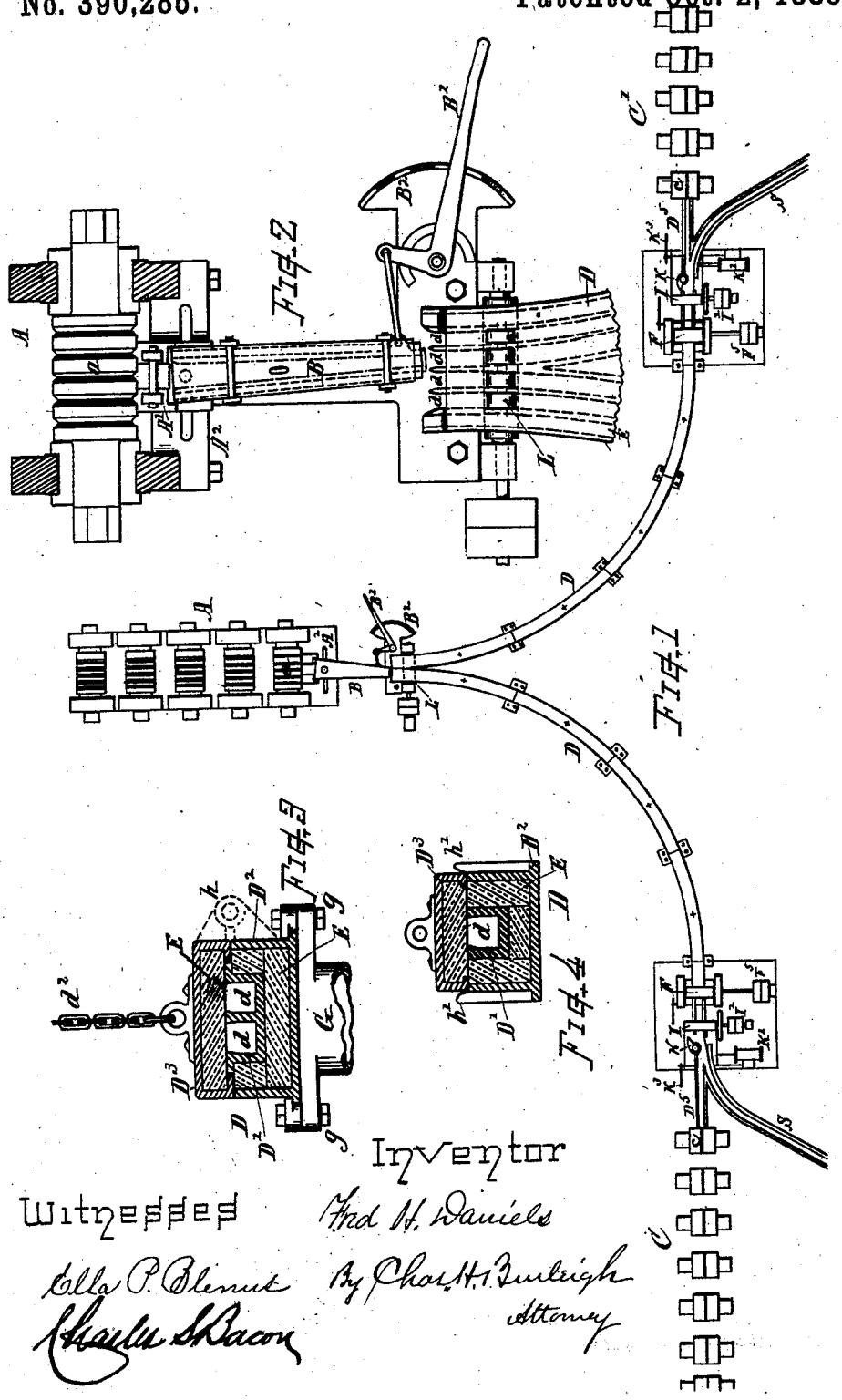

Witnesses
Ella P. Blemut
Charles S. Bacon

Inventor
Fred H. Daniels
By Chas. H. Burleigh
Attorney

(No Model.) 2 Sheets—Sheet 2.

F. H. DANIELS.

ROLLING MILL APPARATUS.

No. 390,285. Patented Oct. 2, 1888.

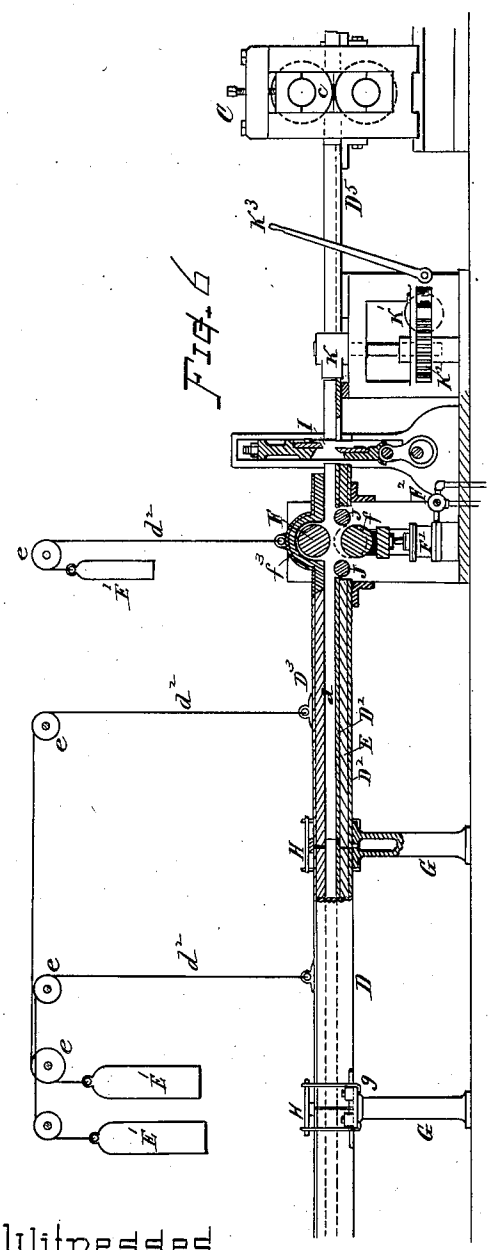

Fig. 6

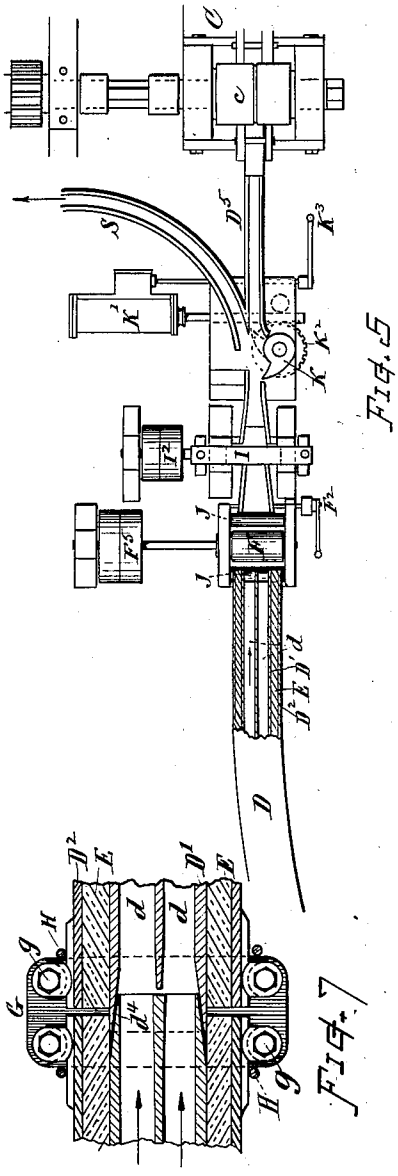

Fig. 5

Fig. 7

Witnesses.

Ella P. Blenus

Charles S. Bacon

Inventor

Fred H. Daniels

By Chas. A. Burleigh

Attorney

UNITED STATES PATENT OFFICE.

FRED H. DANIELS, OF WORCESTER, MASSACHUSETTS.

ROLLING-MILL APPARATUS.

SPECIFICATION forming part of Letters Patent No. 390,285, dated October 2, 1888.

Application filed December 15, 1887. Serial No. 257,925. (No model.)

To all whom it may concern:

Be it known that I, FRED H. DANIELS, a citizen of the United States, residing at Worcester, in the county of Worcester and State of Massachusetts, have invented certain new and useful Improvements in Rolling-Mill Apparatus, of which the following, together with the accompanying drawings, is a specification sufficiently full, clear, and exact to enable persons skilled in the art to which this invention appertains to make and use the same.

The objects of my present invention are, first, to provide, in a rolling-mill for making wire rods, bands, and similar small shapes, facilities for maintaining the inherent heat of the metal while conducting it at an intermediate stage of its reduction from the billet-mill or first train of rolls to the rod-mill or finishing train or trains, and thereby rendering it practical to produce a product of small size by rolling direct from primarily-heated blooms or bars of large section without additional application of heat to the metal at any intermediate stage in the reducing process; second, to provide an incased guide or guides, as more fully hereinafter described, through which the partially-reduced product is conducted from the first to the second rolling-trains; third, to provide, in combination with the rolling-trains, an incased guide or guiding-conductor, which also serves as a receiving-chamber, having capacity for containing a given length of material in an extended condition or free from kinks, snarls, or short bends, mechanism for clipping or severing the product, and also facilities for feeding forward the partially-reduced bars to the second train. These objects I attain by mechanism the nature, construction, and operation of which are explained in the following description, the particular subject-matter claimed being hereinafter definitely specified.

In the drawings, Figure 1 is a plan diagram showing in a general way an adaptation of my invention for use in a rolling-mill plant, comprising a billet-mill or large section-train and two rod-mills or finishing-trains. Fig. 2 is a sectional plan of switching mechanism at the foot of the billet-mill. Fig. 3 is a transverse vertical section of the incased conductor as made with two guiding-channels. Fig. 4 is a similar view of the conductor as made with a single guide-channel. Fig. 5 is a plan view of the mechanism at the foot of the conductor and head of the rod-mill or second train. Fig. 6 is a part side and part vertical section view of the same, and Fig. 7 is a horizontal section through the connecting-joints of the conductor.

Referring to parts, A indicates a billet-mill or first train of rolls, consisting of any desired number of pairs, preferably arranged to operate in continuous order, though other order may, in some cases, be employed, and provided with the usual guides and operating-gearing, which parts, being well known, are not herein shown. The respective rolls have grooves of suitable size and form for reducing a bloom or bar of large section, or, say, four by four inches, more or less, to a section of about one inch, more or less, as it issues from the last pair of rolls, *a*, in said billet-mill, or first series.

B indicates a switch or movable guide, through which the bar or product is projected from the rolls *a*, and by means of which the product can be directed into the proper guide-way to run to either of the rod-mills or second series of rolls, C or C′, which are located at the right and left at some distance from the billet-mill A, and are, in the present instance, disposed in a direction at right angles to that of the billet-mill, but, if preferred, might be disposed in other suitable relation thereto. I have illustrated the second series as a continuous mill, but other form of mill can be used, if desired. The rod-mills C C′ may consist of any number of pairs of rolls—say fourteen or sixteen pairs, more or less, in each train—the same arranged and operated in the same manner as now employed in continuous rod-rolling mills. The supporting-housings, operating-gearing, and guides, being such as commonly used in this class of mill, and well known, need not be herein shown and described.

D D indicate the guides or conducting-ways for directing the product from the first to the second rolling-trains. Said conductors are constructed as indicated, preferably with two guiding grooves or channels, *d*, formed in an inner casting or metal trough, D′, which trough is inclosed by an outer box or casting, D^2, of considerably larger diameter, and the inter-

vening space between the inner and outer metal is filled with fire-brick, asbestus plaster, or other non-radiating or non-conducting refractory material, E, or, if desired, with a dead-air space for retaining the inherent heat of the worked product while within said conductor and for protecting the hot metal from the oxidizing influence of the atmosphere. The conducting-way D is provided with a removable cover or covers, D^3, which may be formed in short lengths or sections convenient for handling. These covers are preferably suspended in connection with counterbalance-weights E′ by suitable chains, d^2, that pass over pulleys *e*, mounted on overhead supports, so that the covers can be conveniently raised when desired.

If desired, the covers D^3 may be hinged to the lower part of the casing, as indicated by dotted lines at *h* in Fig. 3; or the casing may be provided with lugs, as at *h′*, Fig. 4, for retaining the cover in position laterally.

The conducting-way is preferably made in sections with connecting joints, as indicated in Figs. 6 and 7, to allow expansion and contraction in its length, the sections of the interior trough or metal lining, D′, being fitted together in the manner indicated at d^1 in Fig. 7, so that the expansion and contraction will not open or offset the parts in a manner to interfere with the free running of the product through the guiding-channels *d*. The conductor casing or box D^2 is preferably supported on posts G, to which the respective sections are bolted, as indicated at *g*, or a brick wall can be used for the support of the conducting-way.

The covers D^3 can be locked down by straining-bars H and suitable binders, as indicated in Fig. 6.

In the line of the conductor D and near to the head of the rod-mill or secondary rolling-train C is arranged a set of feed-rolls, F, one of which rolls, *f*, has its bearings connected with a hydraulic piston working in a cylinder, F′, by means of which said roll can be raised and depressed accordingly as pressure is let into or from said cylinder by the controlling-valve F^2, thereby causing the feed-rolls to grip or release the product for feeding it forward or stopping its movement within the inclosed guiding-channel *d*, as desired. The feed-rolls can have a removable counterweighted cover, f^3, as indicated in Fig. 6, or otherwise.

J J indicate small rolls for supporting the product while roll *f* is depressed. Adjacent to said feed-rolls is a power-shears, I, adapted for clipping or severing the bar or product. Motion is imparted for operating the shears I and feed-rolls F by suitable belts running on the pulleys I^2 and F^6 from any convenient driving-shaft. Beyond the shears I the guide D^5, in continuation of the guide or conducting way D, extends to the leading pair of rolls *c* in the rod-mill or second train, C or C′, so that the product as it runs forward will enter the bite of said rolls *c* automatically.

An offshoot guide or channel leading away from the rod-mill is provided, as indicated at S. A cutting and switching device, K, is arranged in connection with the main guide for severing the bar and directing the following portion thereof into said offshoot-guide, where it can run out upon the floor or other place of deposit at one side of the mill without entering the second train of rolls. Said cutting and switching device consists of a suitably-formed head mounted on a rotating shaft, which is provided with a gear, K^2, that meshes with an actuating-rack operated by a hydraulic piston and cylinder, K′, brought into action under control of the valve and valve-lever K^3 when required. The purpose of this cutter, switch K, and offshoot-channel S is for severing the bar while running, and thus stop the feeding of the bar into the rod-train in case of any accident, such as the choking of the guides, breaking out of the rod, or other irregularity in the running of the finishing-train.

The switch B is pivoted to the guide-box A′, supported in connection with the slotted bar A^2, fixed to the housing-frame of the billet-mill, and which box is laterally adjustable on its support to bring the guide in line with either of the several grooves of the rolls *a*. A suitable operating-lever, B′, is combined with said switch for shifting it to direct the rod to either of the guiding-channels in the right or left conducting-ways D.

B^2 indicates a notched segment for retaining the lever B′ and switch B at the various positions of adjustment. This switching-guide B is preferably incased in a non radiating or refractory casing similar to that of the conductor D, as indicated in Fig. 2.

Feed-rolls L are arranged at the head of the conducting-way D for advancing the product clear of the switch B after its rear end has left the last rolls, *a*, of the billet-mill.

The length of the respective conducting-ways D is sufficient to contain the entire length of the bar or product as delivered from the first train, A, it being deposited within the guiding-channel *d* as it is rolled out from said train with its forward end just reaching through the shears I to the extent of the crop end to be cut off, its rear end being clear of the switch B, so that a following bar can be directed thereby into one of the other guiding-channels *d*. Alternate billets are directed to the right and left rod-mills or trains C C′ when working the apparatus to its full capacity. After the rough head or crop end of the partially-reduced bar has been clipped off by the shears I the feed-rolls F are brought into action to advance the bar into the second train of rolls, C C′, by means of which it is reduced to the required finished size. The rod may be subsequently coiled by any suitable mechanism, the entire product of a single bloom being made into a single coil; or, if coils of a smaller quantity

are desired, the partially-reduced product can be severed into sections of a desired length by means of the shears I, and each of the several sections in turn advanced by means of the feed-rolls F to be finished and separately coiled, as above stated.

By making the conducting-way D with two guiding-channels, *d*, ample opportunity is afforded for clearing the conductor of one section of the product before another is brought into position, as the second groove can be used for the second billet or bar when the first channel or any portion thereof is occupied by a preceding bar.

I have in a previous application, Serial No. 228,280, described an apparatus having a first or billet-rolling mill, a conducting-guideway, and means for delivering the partially-reduced product into the furnace of a second or rod-rolling mill. It will therefore be understood that in the present application I do not claim the features illustrated and embraced in said previous application; but in the present application I include new features of construction and combinations that render the apparatus practically more efficient and economical.

What I claim as my invention, and desire to secure by Letters Patent, is—

1. In a rolling-mill apparatus, a conducting-way incased within a heat-retaining covering, as described, into and through which the product is guided and deposited preparatory to shearing the crop end therefrom and feeding it into the rod-rolling train or finishing series of rolls.

2. In a rolling-mill for producing wire rods, an intermediate receiving-channel or guiding-way between the reducing roll-trains, into or through which the partially-reduced product is delivered, said guiding-way being covered with a non-conducting or non-radiating material for retaining the heat of the partially-reduced metal previous to its delivery to a final or finishing series of rolls.

3. The conductor having a plurality of guiding-channels incased within a heat-retaining covering, substantially as described, in combination with a rolling-mill from which the hot bar or product is projected and deposited into said conductor, for the purpose set forth.

4. The conductor composed of the inner metal lining, having a guiding groove or grooves, an exterior metal casing with an intermediate heat-retaining filling, and the removable cover-sections, substantially as and for the purpose set forth.

5. The long conducting-way incased within a heat-retaining covering or case, and composed of a series of sections having interlocking connections that permit the expansion and contraction, in combination with the primary and secondary series of reducing-rolls in a rolling-mill.

6. In a mill for producing wire rods, the combination of a first series of rolls for partially reducing the product, an inclosed heat-retaining conducting-way into and through which the product is delivered, shears for cutting the partially-reduced product, and a second or final series of rolls to which the product is delivered from said conducting-way and reduced to finished wire rod.

7. In a mill for producing wire rods in continuous order from blooms or bars of large sectional area, the combination of a primary series of rolls, a non-radiating inclosed conducting-way that receives the partially-reduced products from said primary series of rolls, shears for cutting the same, feed-rolls for moving the product within the conducting-way, and a continuous rod-train or series of rolls for completing the reduction of the product to finished size and form.

8. The combination, with the billet-mill or primary series of rolls and the rod-mills or secondary series of rolls, of a plurality of conducting-ways inclosed in a heat-retaining covering and respectively leading from the primary to the secondary trains, switching mechanism for directing the partially-reduced product from the primary train into either of the conducting-ways, and feed-rolls in connection with said conducting-ways for drawing the product from the switch and advancing it therein.

9. The combination, with the primary rolls, conducting-way, and secondary rolls, of the offshoot conductor and cutting and switching devices for severing the product and directing it into said offshoot at the head of the secondary train, as set forth.

10. The movable switch, its pivot-supporting box laterally adjustable upon the supporting-frame, in combination with the rolls A, having a number of grooves, the conducting-ways D, and the switch-operating mechanism, substantially as and for the purpose set forth.

11. In a rolling-mill for producing wire rods, having separate series of reducing-rolls, an intermediate receiving-channel into or through which the partially-reduced product is delivered, said receiving-channel being conformed to support the rod from buckling and covered with a non-conducting or non-radiating material.

Witness my hand this 12th day of December, A. D. 1887.

FRED H. DANIELS.

Witnesses:

CHAS. H. BURLEIGH,

ELLA P. BLENUS.