Office de la Propriété Intellectuelle du Canada
Un organisme d'Industrie Canada

Canadian Intellectual Property Office
An agency of Industry Canada

CA 2430507 A1 2004/05/21

(21) 2 430 507

(12) DEMANDE DE BREVET CANADIEN
CANADIAN PATENT APPLICATION

(13) A1

(22) Date de dépôt/Filing Date: 2003/05/30

(41) Mise à la disp. pub./Open to Public Insp.: 2004/05/21

(30) Priorité/Priority: 2002/11/21 (2002-72751) KR

(51) Cl.Int.^{7}/Int.Cl.^{7} A47L 9/16

(71) Demandeur/Applicant:
SAMSUNG GWANGJU ELECTRONICS CO., LTD., KR

(72) Inventeurs/Inventors:
OH, JANG-KEUN, KR;
JIN, HYOUNG-JONG, KR

(74) Agent: GOWLING LAFLEUR HENDERSON LLP

(54) Titre : CYCLONE DEPOUSSIEREUR POUR ASPIRATEUR
(54) Title: CYCLONE DUST COLLECTING APPARATUS FOR VACUUM CLEANER

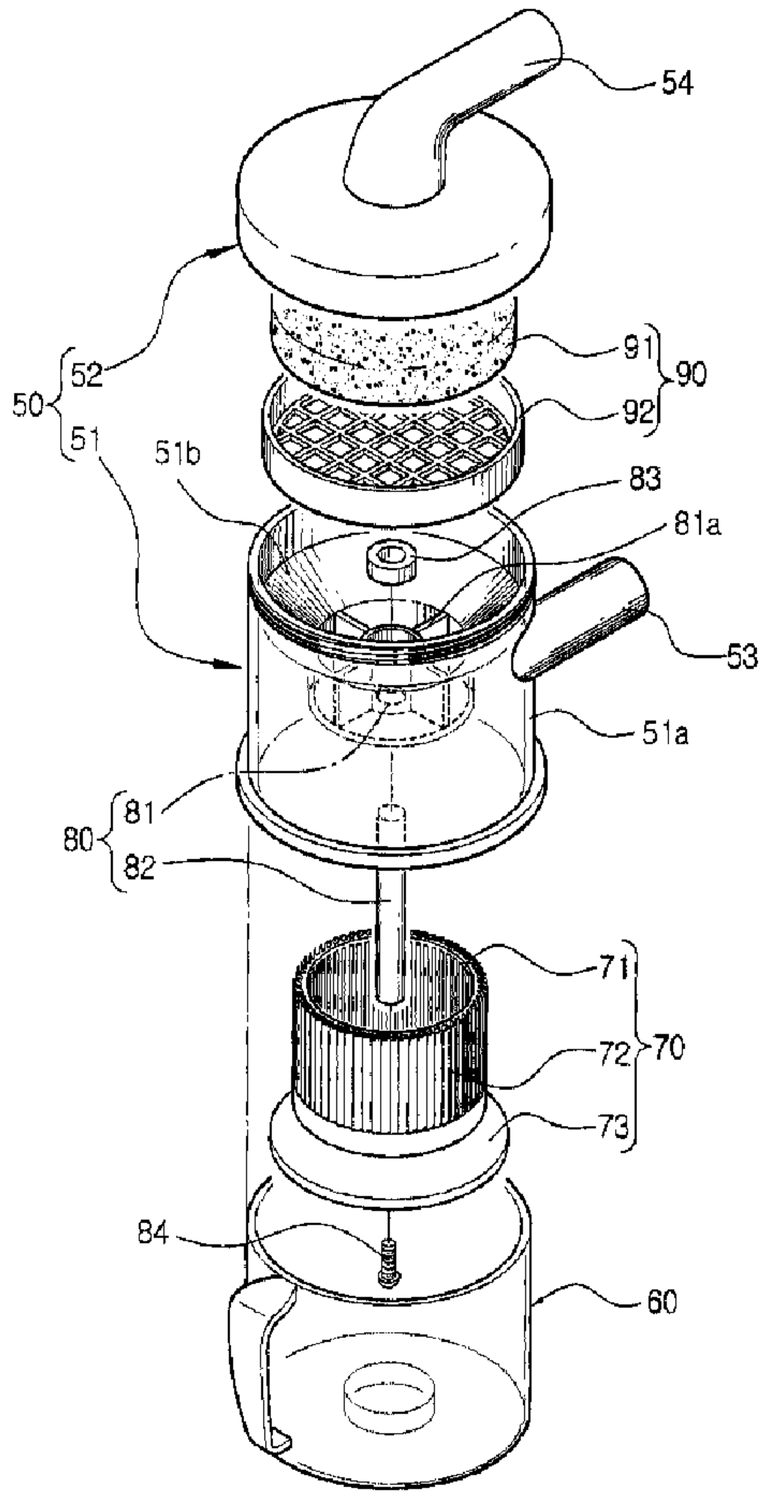

(57) Abrégé/Abstract:
A cyclone dust collecting apparatus for a vacuum cleaner is disclosed. The cyclone dust collecting apparatus for the vacuum

CA 2430507 A1 2004/05/21

(21) 2 430 507

(13) A1

(57) Abrégé(suite)/Abstract(continued):
cleaner includes a cyclone body having an air inflow port and air outflow port, for forming a vortex air current of contaminant-laden air drawn in through the air inflow port, a dust receptacle removably connected to the cyclone body for receiving dusts and contaminants separated from the air. A grill disposed inside the cyclone body helps to prevent the flow of the dust and contaminants separated from the air through the air outflow port. The grill can rotate and can also include sloped air path members.

ABSTRACT OF THE DISCLOSURE

A cyclone dust collecting apparatus for a vacuum cleaner is disclosed. The cyclone dust collecting apparatus for the vacuum cleaner includes a cyclone body having an air inflow port and air outflow port, for forming a vortex air current of contaminant-laden air drawn in through the air inflow port, a dust receptacle removably connected to the cyclone body for receiving dusts and contaminants separated from the air. A grill disposed inside the cyclone body helps to prevent the flow of the dust and contaminants separated from the air through the air outflow port. The grill can rotate and can also include sloped air path members.

CYCLONE DUST COLLECTING APPARATUS FOR VACUUM CLEANER

BACKGROUND OF THE INVENTION

1. Field of the Invention

The present invention relates to a vacuum cleaner, and more particularly to a cyclone dust collecting apparatus for a vacuum cleaner for separating and collecting dusts and contaminants from contaminant-laden air with a centrifugal force that is formed by generating an air vortex.

2. Background of the Related Art

Figs. 1 and 2 are exemplary views schematically showing a cyclone dust collecting apparatus for a vacuum cleaner.

Referring to Figs. 1 and 2, a reference numeral 100 represents the cyclone dust collecting apparatus, 200 represents a cleaner body and 300 represents a cleaner brush (not shown in Figure 1). The cyclone dust collecting apparatus 100 comprises a cyclone body 10, a dust receptacle 20 and a grill 30.

As shown in Figs. 1 and 2, the cyclone body includes an air inflow pipe 11 and an air outflow pipe 12. The air inflow pipe 11 is connected with an air inflow port (not shown) at one side of the cyclone body 10. The air inflow pipe 11 is connected to an air inflow path 210 configured to be in fluid communication with a suction port (not shown) of the suction brush 300, when the cyclone dust collecting apparatus is installed in the cleaner body 200. The air outflow pipe 12 is connected to an air outflow port (not shown) at a top of the cyclone body 10.

The air outflow pipe 12 is connected to an air outflow path 220 configured to fluid-communicate with a motor driving chamber 310 of the suction brush 300, when the cyclone dust collecting apparatus is installed in the cleaner body 200. The contaminant-laden air is drawn in by the suction brush 300 into the cyclone body 10 in a tangential direction through the air inflow path 210 of the cleaner body 200 and air inflow pipe 11. The drawn air forms a vortex air current in the cyclone body 10 and thus the dust and contaminants are separated from the contaminant-laden air by a centrifugal force of the vortex air, whereby the clean air is discharged externally via the air outflow path 220 of the cleaner body 200 and the motor chamber 310.

The dust receptacle 20 is removably connected to a bottom of the cyclone body 10 and receives the dusts and contaminants separated from the air by the centrifugal force of the vortex air current in the cyclone body 10.

The grill 30 is disposed at an opening of the air outflow pipe 12 inside the cyclone body 10 to prevent the dust and contaminants separated from the vortex air from flowing through the air outflow pipe 12. As shown in Figure 2, grill 30 includes a grill body 31 and a plurality of air paths 32 disposed at an outer circumference of the grill body 31 that allow air to flow to air outflow pipe 12.

The general cyclone dust collecting apparatus as described above is installed in the cleaner body 200 such that the air inflow pipe 11 and the air outflow pipe 12 of the cyclone body 10 are respectively connected to the air inflow path 210 and the air outflow path 220 of the cleaner body 200.

In operation, a suction force is generated at the suction brush 300 driven by a motor in the motor chamber 310. The generated suction force draws the contaminant-laden air on a cleaning surface into the cyclone body 10 through the suction brush 300, air inflow path 210 and air inflow pipe 11. The drawn air is led through the air inflow pipe 11 along an inner circumference of the cyclone body 10 in an oblique direction to form a vortex air current. Dust and contaminants in the air are separated by the centrifugal force generated by the vortex air current and are collected in the dust receptacle 20. The clean air is discharged externally through the air paths 32, air outflow pipe 12, air outflow path 220 and motor chamber 310.

However, the general cyclone dust collecting apparatus as described above has a problem of degrading the cleaning efficiency. Related cyclone dust collecting devices failed to retain a satisfactory amount of dust and allowed dust and contaminants to be discharged with the outflow of the air through the air path 32 in the grill 30.

SUMMARY OF THE INVENTION

An object of the invention is to solve at least the above problems and/or disadvantages and to provide at least the advantages described below.

Accordingly, an object of the present invention is to solve the foregoing problems by providing a cyclone dust collecting apparatus for a vacuum cleaner capable of maximizing the separation of clean air from contaminated air by rotating a grill that assists in preventing dust from escaping a dust collection apparatus.

The foregoing and other objects and advantages are realized by providing a cyclone dust collecting apparatus for a vacuum cleaner comprising: a cyclone body having an air inflow

port and air outflow port, for forming a vortex air current of contaminant-laden air drawn in through the air inflow port; a dust receptacle removably connected to the cyclone body for receiving dust and contaminants separated from the air by a centrifugal force of the vortex air current in the cyclone body; a grill disposed to the air outflow port inside the cyclone body for preventing dust and contaminants separated from the air through the air outflow port; and a grill rotation supporting means for supporting the grill to rotate by the vortex air current in the cyclone body.

The cyclone body comprises: a cylindrical main body having a side surface on which the air inflow port is formed and a upper surface on which the air outflow port is formed; and a cover removably connected to the upper surface of the cylindrical main body, wherein an air inflow pipe connected to an air inflow path of a cleaner man body is disposed to the air inflow port and an air outflow pipe connected to an air outflow path of the cleaner body is disposed to about a center of the cover.

The cylindrical main body and cover are removably connected to each other through spiral connecting mechanisms respectively formed on corresponding surfaces of each other for connection.

The grill comprises: a grill body; and a plurality of air path members disposed at an outer circumference of the grill body in a predetermined slope angle to form an air passage to the air outflow port.

Preferably, the grill may further comprise: a contaminant blocking member disposed at a lower portion of the grill body.

The grill rotation supporting means comprises: a supporting member supported to be disposed at the center of the air outflow port of the cylindrical main body by a plurality of ribs protruding from an inner surface of the air outflow port; and a rotating member having one end rotatably supported by interposing a bearing and other end driven through the grill to be screwed to a lower portion of the grill.

According to the cyclone dust collecting apparatus in accordance with the invention, a fine dust filter assembly is provided between the upper surface of the cylindrical main body and cover to filter fine dusts.

The fine dust filter assembly comprises: a fine dust filter; and a filter frame having a lower part of grid structure, for receiving and supporting the fine dust filter.

Preferably, the upper surface of the cylindrical main body is formed to slope down from outside toward inside.

Additional advantages, objects, and features of the invention will be set forth in part in the description which follows and in part will become apparent to those having ordinary skill in the art upon examination of the following or may be learned from practice of the invention. The objects and advantages of the invention may be realized and attained as particularly pointed out in the appended claims.

BRIEF DESCRIPTION OF THE DRAWINGS

The invention will be described in detail with reference to the following drawings in which like reference numerals refer to like elements wherein:

Fig. 1 is an exploded perspective view showing a conventional cyclone dust collecting apparatus and an associated vacuum cleaner;

Fig. 2 is a cross sectional view the cyclone dust collecting apparatus of Fig. 1 after assembly and installation;

Fig. 3 is an exploded perspective view of a cyclone dust collecting apparatus in accordance with an embodiment of the invention before assembly;

Fig. 4 is a cross sectional view showing the cyclone dust collecting apparatus of Fig. 3 after assembly; and

Fig. 5 is an exploded perspective view of the cyclone dust collecting apparatus of Fig. 3 prior to installation in a cleaner.

Fig. 6 is a cross-sectional top view of the cyclone dust collecting apparatus of Fig. 3, taken along line 6-6..

Fig. 7 is an enlarged view of an air path member of the cyclone dust collecting apparatus of Fig. 3.

DETAILED DESCRIPTION OF PREFERRED EMBODIMENTS

As shown in Figs. 3 and 4, a cyclone dust collecting apparatus for a vacuum cleaner in accordance with an embodiment of the invention comprises a cyclone body 50, a dust receptacle 60, a grill 70 and a grill rotation supporting means 80.

The cyclone body 50 includes a cylindrical main body 51 and a cover 52 removably connected to the cylindrical main body 51. Cylindrical main body 51 includes a side surface 51a and an upper surface 51b. At one side of side surface 51a is formed an air inflow port, and at

about a center of the upper surface 51b is formed an air outflow port. An air inflow pipe 53 is connected to the air inflow port, which is also connected to an air inflow path 210 (see Fig. 5) of a cleaner main body 200. An air outflow pipe 54 is connected to the air outflow port at about the center of the cover 52, which is also connected to an air outflow path 220 (see Fig. 5) of the cleaner main body 200.

In operation, contaminant-laden air is drawn by a suction brush 300 (see Fig. 5) into the cyclone body 50 in a tangential direction through the air inflow path 210 and air inflow pipe 53. In this process, a vortex air current is formed in the cyclone body 50, and the dust and contaminants included in the vortex air are separated from the air by the centrifugal force of the vortex air and thus the clean air is discharged externally through the air outflow pipe 54, the air outflow path 220 and a motor driving chamber 310 (see Fig. 5).

The dust receptacle 60 is removably connected to a bottom of the cyclone body 50 and receives the dusts and contaminants separated from the air by the vortex air current in the cyclone body 50. The dust receptacle 60 may include a handle for enabling easy handling. When the dust receptacle 60 is filled up, the dust receptacle 60 may be separated from cyclone body 50 to empty the dust receptacle 60.

The grill 70 is disposed at the air outflow port in the cyclone body 50 to assist in separating dust and contaminants separated from the vortex air from flowing through the air outflow port. Grill 70 includes a grill body 31 and a plurality of air path members 72 disposed in an outer circumference of the grill body 71 that form air passages to the air outflow port.

In some embodiments, the grill rotation supporting means 80 includes a supporting member 81 and a rotating member 82. The supporting member 81 is disposed at a center of

the air outflow port of the cylindrical main body 51 and is supported by a plurality of ribs 81a protruding from an inner surface of the air outflow port. The rotating member 82 has one end rotatably supported by interposing a bearing. The other end extends through the grill 70 and is fixed to grill 70 at a lower portion of grill 70 by a screw 84. The grill 70 thus rotates with the rotating member 82 with respect to the supporting member 81 by the vortex air current formed in the cyclone body 50. The rotation of the grill 70 helps to prevent the flow of the dust and contaminants through the air passage of the grill 70.

In the cyclone dust collecting apparatus 70 according to the invention, the grill 70 may be adapted to include a grill body 71, a plurality of air path members 72 disposed in a predetermined slope angle to form an air passage to the air outflow port and a contaminant blocking member 73 disposed at a lower portion of the grill body 71.

Figures 6 and 7 show, in detail, the preferred slope angle and its relationship to the vortex air current. Contaminant-laden air 302 is drawn through air inflow pipe 53 in a tangential direction. As discussed above, this causes the formation of a vortex air flow 304 within cylindrical main body 51. In the embodiment shown in Figure 6, vortex air flow 304 revolves within cylindrical main body 51 in a clockwise direction.

Preferably, air path members 72 are disposed on grill body 71 in a manner that minimizes the chance that dust or other contaminants will enter through grill 70. Figure 7 shows an enlarged view of two adjacent air path members 312 and 314. Air path member 314 has a leading edge 316 and a trailing edge 318. Leading edge 316 is the first edge of air path member 314 to encounter vortex air flow 304. In other words, leading edge 316 is upstream of trailing edge 318. Preferably, leading edge 316 is attached to grill body 71 and trialing

edge 318 is disposed both radially outward of and circumferentially downstream of leading edge 316.

With this arrangement, a slope angle 310 is formed. Slope angle 310 is the angle between a local tangential line 308 and air path member 314. Local tangential line 308 is a line perpendicular to a ray 306 extending from the geometric center of grill 70 to air path member 314. Any air path member that has a slope angle is said to be sloped. This slope angle 310 can be adjusted to suit various design objectives. For example, if the slope angle 310 were reduced, that would increase the ability of grill 70 to separate contaminants from the air, but would also increase the power required to draw air though grill 70. If the slope angle 310 were increased, that would decrease the separation efficiency of grill 70, but less power would be required to draw air through grill 70. Given these various factors, an appropriate slope angle can be selected that best suits particular design objectives.

The grill rotation feature and the sloped air path feature can be used alone or in combination with one another.

As best seen in Figure 4, the contaminant blocking member 73 is a frustum-cone shape with an enlarged lower part of which diameter increases along downward direction. This shape may cause the contaminants collected in the dust receptacle 60 that have floated in an upwardly moving air current to be redirected by the contaminant blocking member 73, thereby to fall into the dust receptacle 60.

The cyclone dust collecting apparatus for the vacuum cleaner in accordance with the invention is further provided with a fine dust filter assembly 90 interposed between the

cylindrical main body 51 and cover 52 of the cyclone body 50 to filter the fine dust that are not removed by the grill 70.

The fine dust filter assembly 90 includes a fine dust filter 91 such as a sponge or other porous material and a filter frame 92 having a lower grid structure, for receiving and supporting the fine dust filter 91. The fine dust filter assembly 90 filters the fine dust passed through the grill 70 and prevents this fine dust from escaping cylindrical main body 51. The upper surface 51b is preferably formed to slope downward from the radially outer periphery toward a central portion so that the fine dust filtered by the fine dust filter assembly 90 falls down to dust receptacle 60 instead of remaining between the upper surface 51b of the cylindrical main body 51 and the fine dust filter assembly 90.

The above described cyclone dust collecting apparatus for a vacuum cleaner can be installed in cleaner body 200, as shown in Fig. 5, so that the air inflow pipe 53 and the air outflow pipe 54 of the cyclone body 50 are respectively connected to the air inflow path 210 and the air outflow path 220 of cleaner body 200.

In operation, a suction force is generated at the suction brush 300 driven by a motor (not shown) in motor chamber 310. The generated suction force draws contaminant-laden air on a cleaning surface into the cyclone body 50 through the suction brush 300, air inflow path 210 and air inflow pipe 53. The drawn air is led through the air inflow pipe 53 along an inner circumference of the cyclone body 50 in an oblique direction. This helps to form a vortex air current, and the dust and contaminants in the air are separated by the centrifugal force generated by the vortex and collected in dust receptacle 60. Thereafter, the clean air is discharged externally through the air passage of the grill 70, air outflow pipe 54, air outflow

path 220 and through motor chamber 310. Given this arrangement, dust and contaminants rarely escape through air passages of the grill 70. However, even if the fine dust, which are not separated by the grill 70, are discharged through the air passage of the grill 70, the fine dust is secondly filtered by the fine dust filter assembly 90 (see Fig. 4), thereby improving the amount of dust collected.

According to the invention described above, the dust and contaminants are separated from the air by the centrifugal force while the grill rotates to prevent the flow of the dust and contaminants through the grill, thus the dust and contaminants hardly flow through air passages of the grill.

Further, even if the fine dusts flow through the air passage of the grill, the fine dusts are secondly filtered by the fine dust filter assembly, thereby improving the quality of collecting the dusts and also improving the efficiency of the cleaning.

While the invention has been shown and described with reference to certain preferred embodiments thereof, it will be understood by those skilled in the art that various changes in form and details may be made therein without departing from the spirit and scope of the invention as defined by the appended claims.

The foregoing embodiments and advantages are merely exemplary and are not to be construed as limiting the present invention. The present teaching can be readily applied to other types of apparatuses. The description of the present invention is intended to be illustrative, and not to limit the scope of the claims. Many alternatives, modifications, and variations will be apparent to those skilled in the art. In the claims, means-plus-function clauses

are intended to cover the structures described herein as performing the recited function and not only structural equivalents but also equivalent structures.

WHAT IS CLAIMED IS:

1. A cyclone dust collecting apparatus for a vacuum cleaner comprising:

a cyclone body having an air inflow port and air outflow port, adapted to form a vortex air current of contaminant-laden air drawn in through the air inflow port;

a dust receptacle removably connected to the cyclone body configured to receive dust and contaminants separated from the air by a centrifugal force of the vortex air current in the cyclone body;

a grill disposed about the air outflow port inside the cyclone body for preventing flow of the dust and contaminants separated from the air through the air outflow port; and a grill rotation supporting means for supporting the grill to rotate by the vortex air current in the cyclone body.

2. The cyclone dust collecting apparatus according to claim 1, wherein the cyclone body comprises:

a cylindrical main body having a side surface on which the air inflow port is formed and a upper surface on which the air outflow port is formed; and

a cover removably connected to the upper surface of the cylindrical main body,

wherein an air inflow pipe is configured to connect to an air inflow path of a cleaner main body, and an air outflow pipe is configured to connect to an air outflow path of the cleaner body, the air outflow also pipe being disposed about a center of the cover.

3. The cyclone dust collecting apparatus according to claim 2, wherein the cylindrical main body and cover are removably connected to each other through spiral connecting mechanisms respectively formed on corresponding surfaces of each other for connection.

4. The cyclone dust collecting apparatus according to claim 2, wherein the grill comprises:

a grill body; and

a plurality of air path members disposed at an outer circumference of the grill body in a predetermined slope angle to form an air passage to the air outflow port.

5. The cyclone dust collecting apparatus according to claim 2, wherein the grill comprises:

a grill body;

a plurality of air path members disposed at an outer circumference of the grill body in a predetermined slope angle to form an air passage to the air outflow port; and

a contaminant blocking member disposed at a lower portion of the grill body.

6. The cyclone dust collecting apparatus according to claim 2, wherein the grill rotation supporting means comprises:

a supporting member disposed at the center of the air outflow port of the cylindrical main body by a plurality of ribs protruding from an inner surface of the air outflow port; and

a rotating member having a first end rotatably supported by interposing a bearing, and a second end extending through the grill and secured to a lower portion of the grill.

7. The cyclone dust collecting apparatus according to claim 2, wherein a fine dust filter assembly is provided between the upper surface of the cylindrical main body and cover to filter fine dust.

8. The cyclone dust collecting apparatus according to claim 7, wherein the fine dust filter assembly comprises:

a fine dust filter; and

a filter frame having a lower grid structure, for receiving and supporting the fine dust filter.

9. The cyclone dust collecting apparatus according to claim 7, wherein the upper surface of the cylindrical main body slopes downward from a radially outer periphery towards a central portion.

10. A cyclone dust collecting apparatus adapted for use with a vacuum cleaner comprising:

a cyclone body having an air inflow port and air outflow port, adapted to form a vortex air current of contaminant-laden air drawn in through the air inflow port;

a dust receptacle removably connected to the cyclone body configured to receive dust and contaminants separated from the air;

a grill disposed proximate the air outflow port and inside the cyclone body;

the grill including at least one air path member; and

wherein the air path member is sloped.

11. The cyclone dust collecting apparatus according to claim 10, wherein a leading edge of the air path member is disposed radially inward of a trailing edge of the air path member.

12. The cyclone dust collecting apparatus according to claim 10, wherein the grill rotates.

13. The cyclone dust collecting apparatus according to claim 12, wherein the vortex air current rotates the grill in a direction similar to a rotational direction of the vortex air current.

14. The cyclone dust collecting apparatus according to claim 12, further comprising a rotating member having a first end including a bearing and a second end rigidly associated with the grill.

15. The cyclone dust collecting apparatus according to claim 14, wherein the bearing is also associated with a supporting member that is attached to the cyclone body.

16. A cyclone dust collecting apparatus adapted for use with a vacuum cleaner comprising:

means for forming a vortex air current of contaminant-laden air;

means for receiving dust and contaminants separated from the air by a centrifugal force of the vortex air current; and

means for rotating a grill disposed within a cyclone body.

17. The cyclone dust collecting apparatus according to claim 16, further comprising a means for supporting the rotating grill.

18. The cyclone dust collecting apparatus according to claim 16, further comprising a means for filtering fine dust.

19. The cyclone dust collecting apparatus according to claim 16, further comprising a means for dropping fine dust into a dust receptacle.

20. The cyclone dust collecting apparatus according to claim 16, further comprising a means for minimizing flowing past the rotating grill.

FIG.1

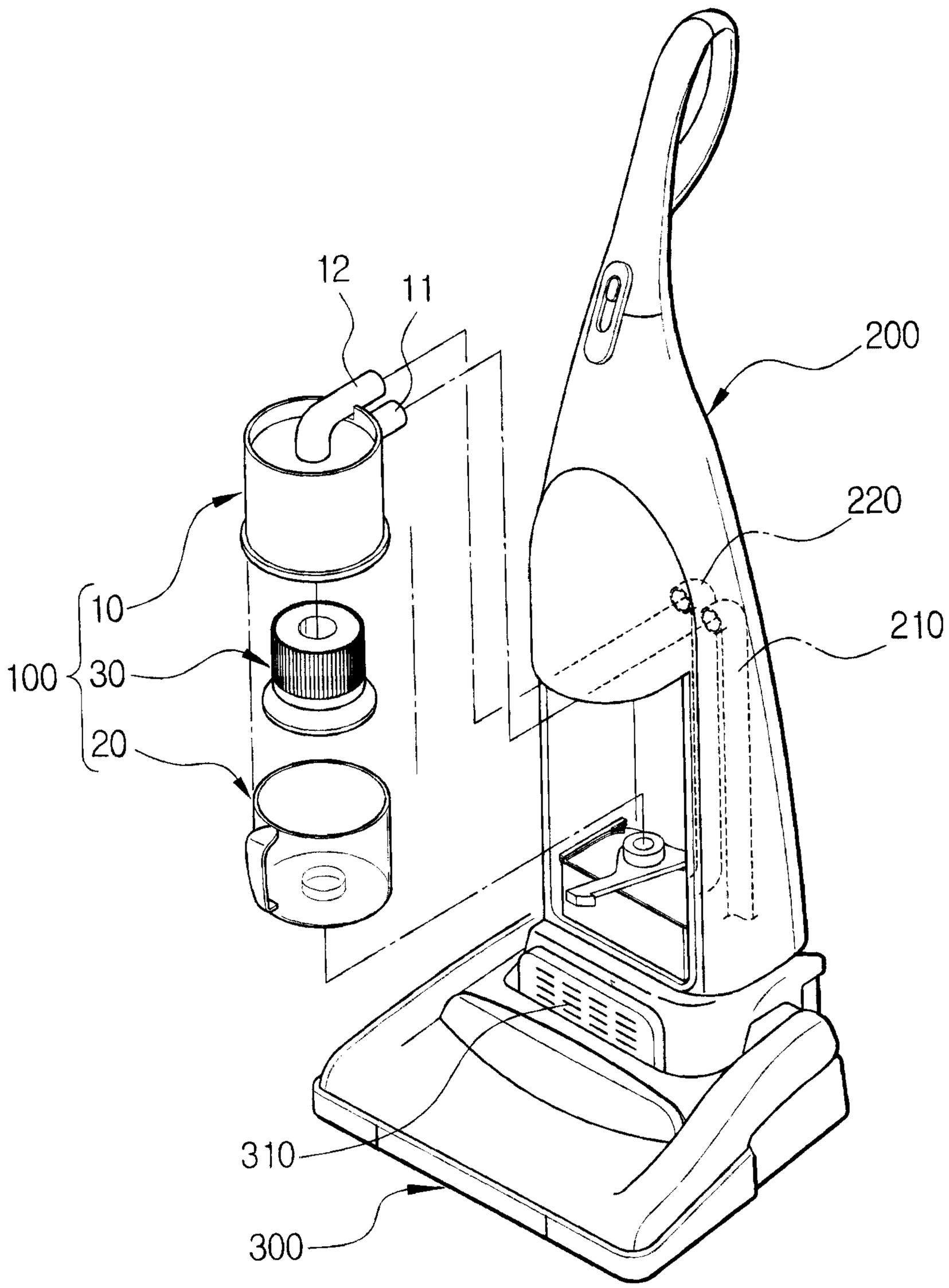

FIG.2

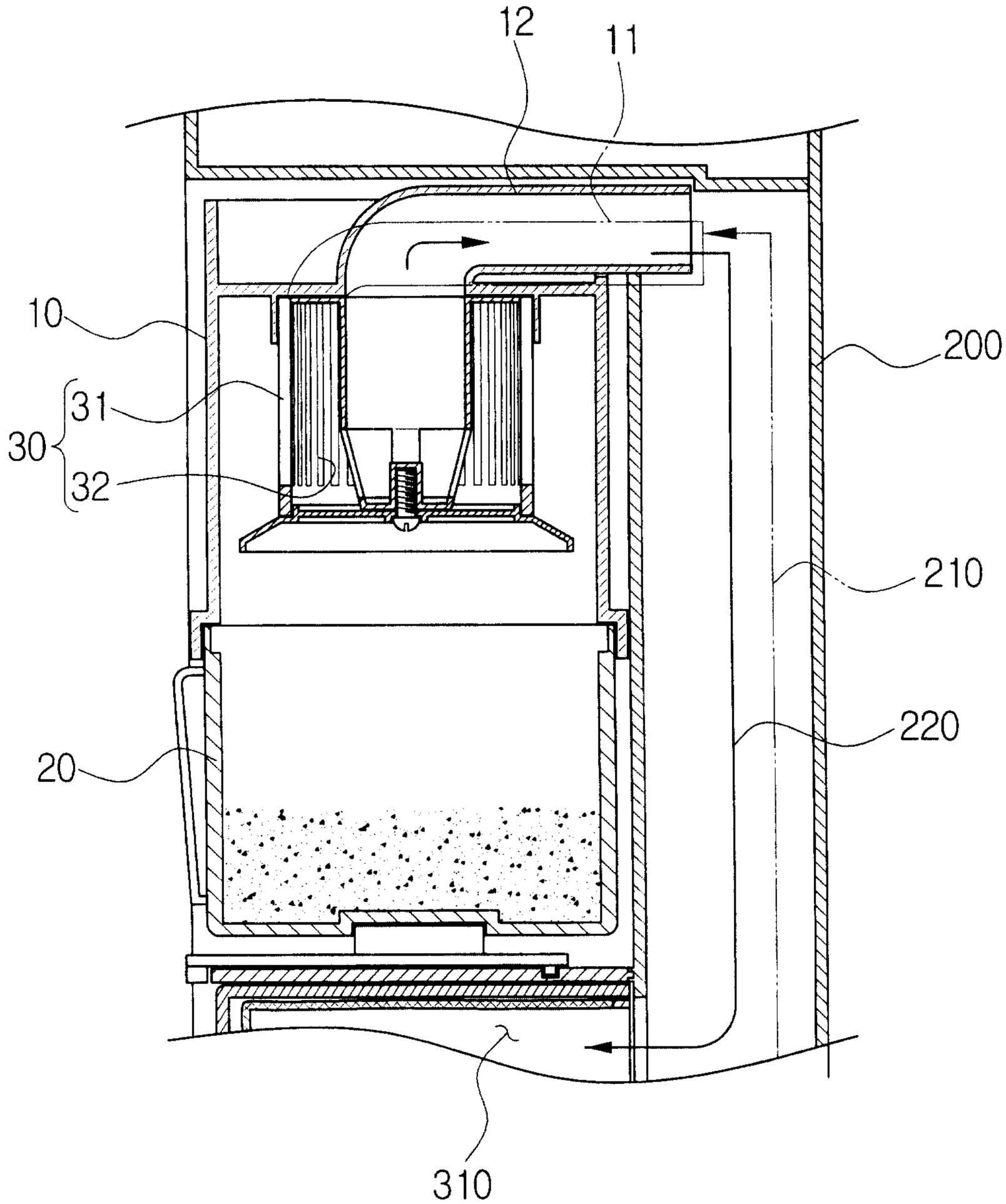

FIG.3

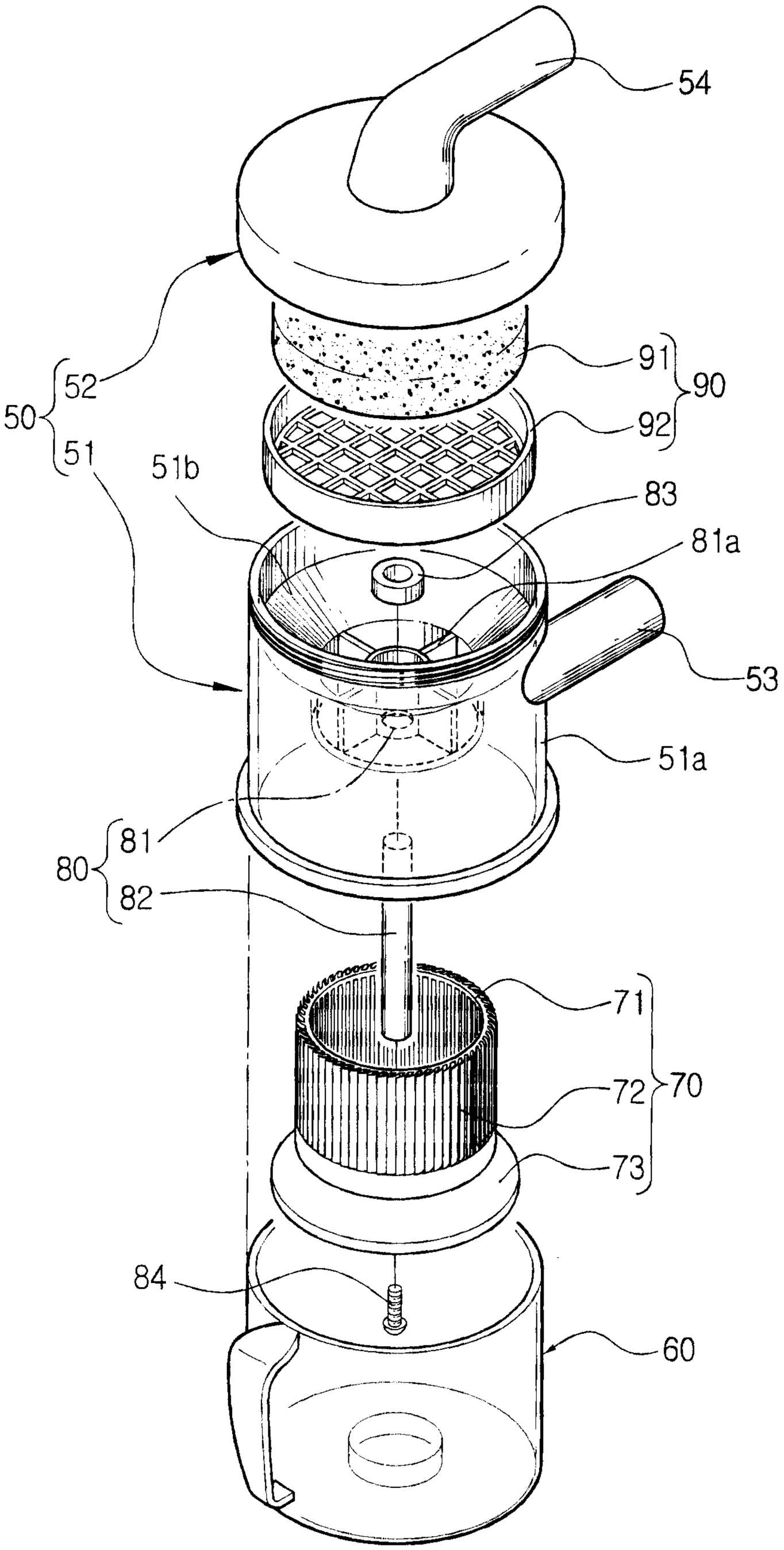

FIG.4

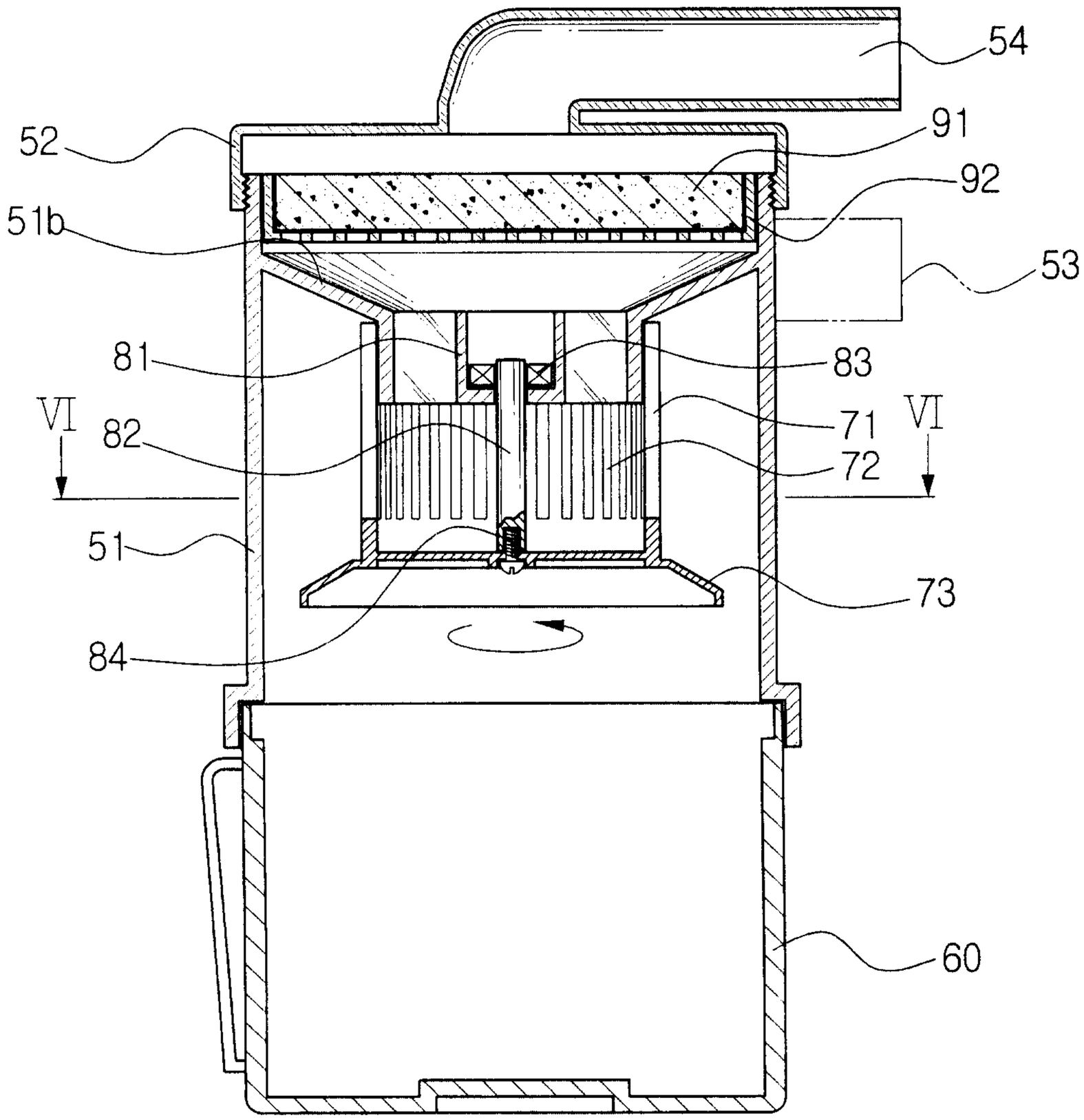

FIG.5

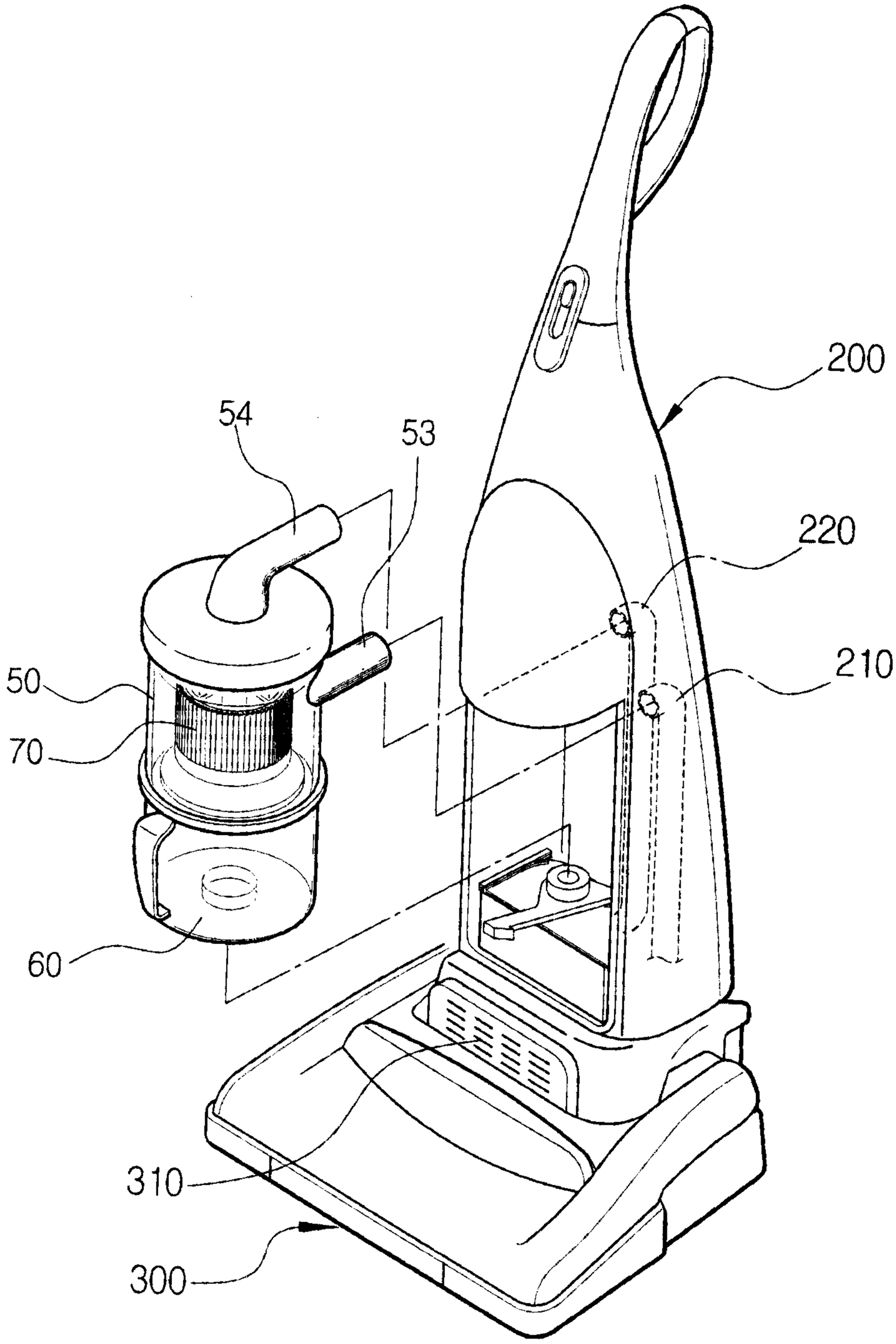

FIG.6

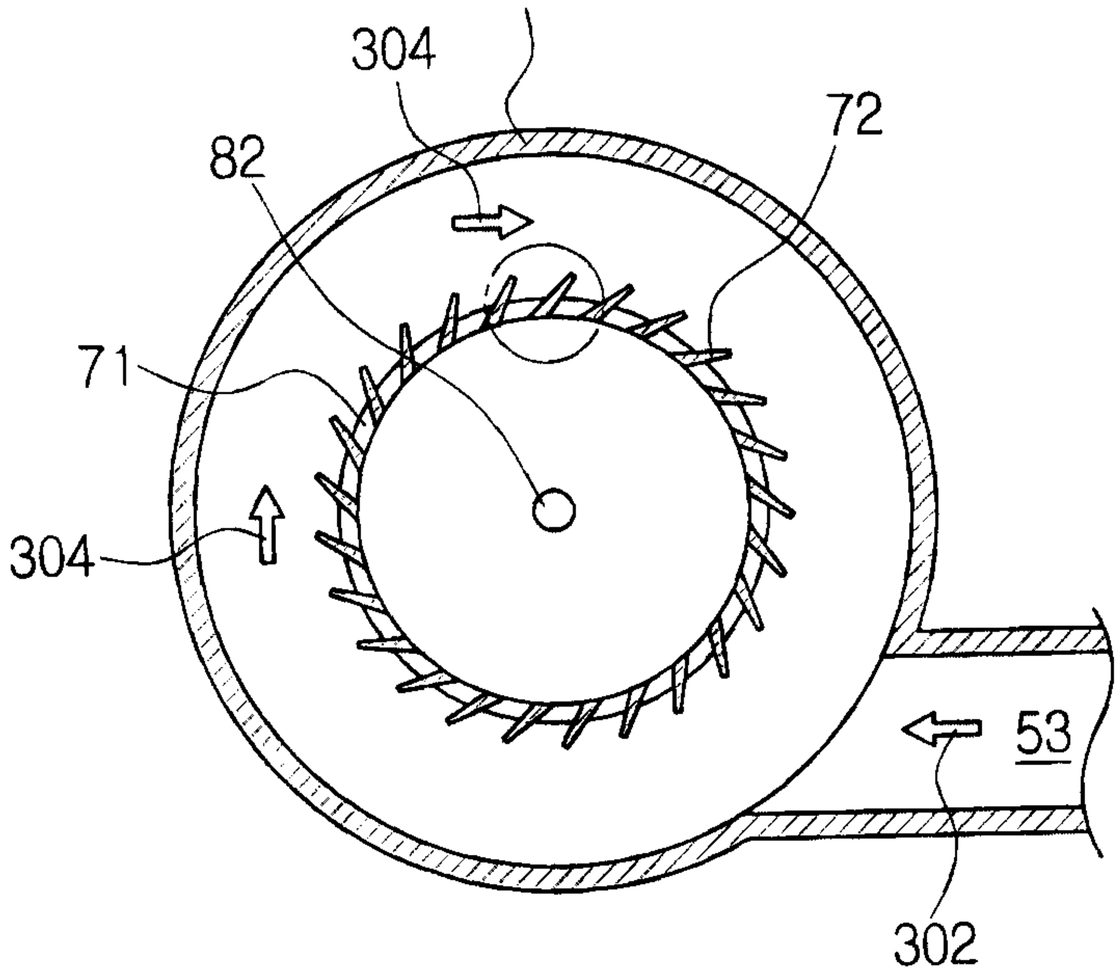

FIG.7

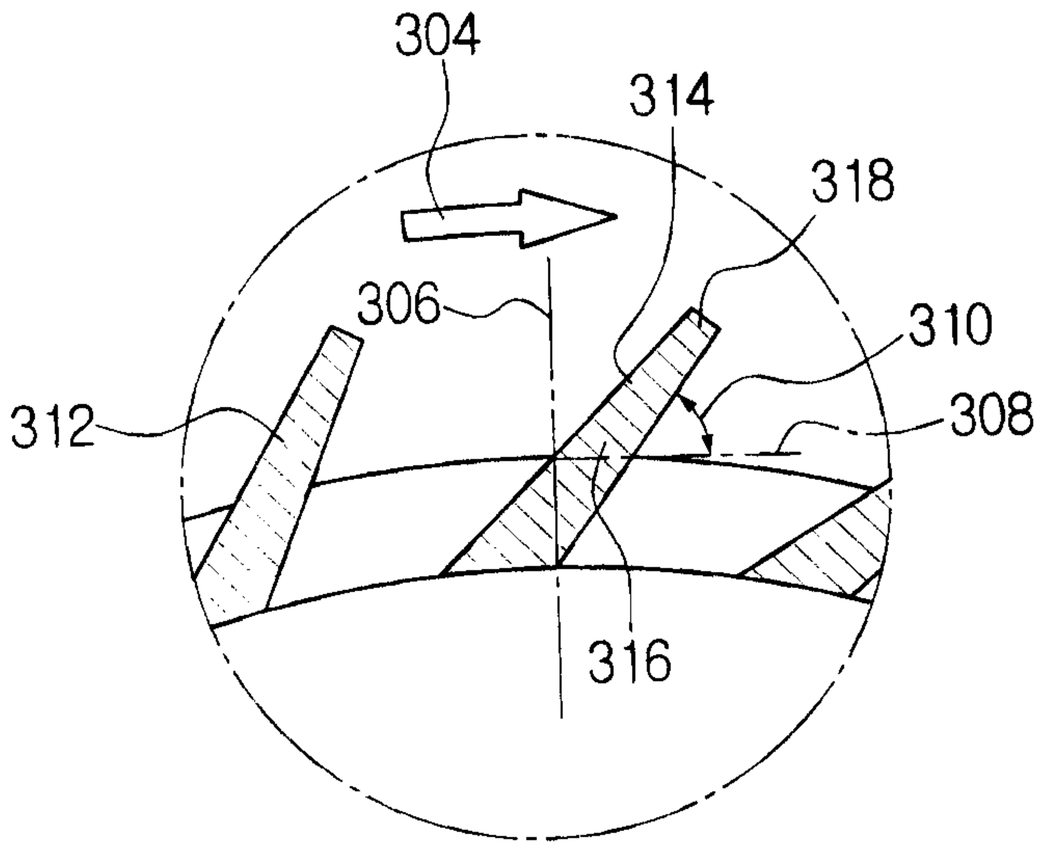

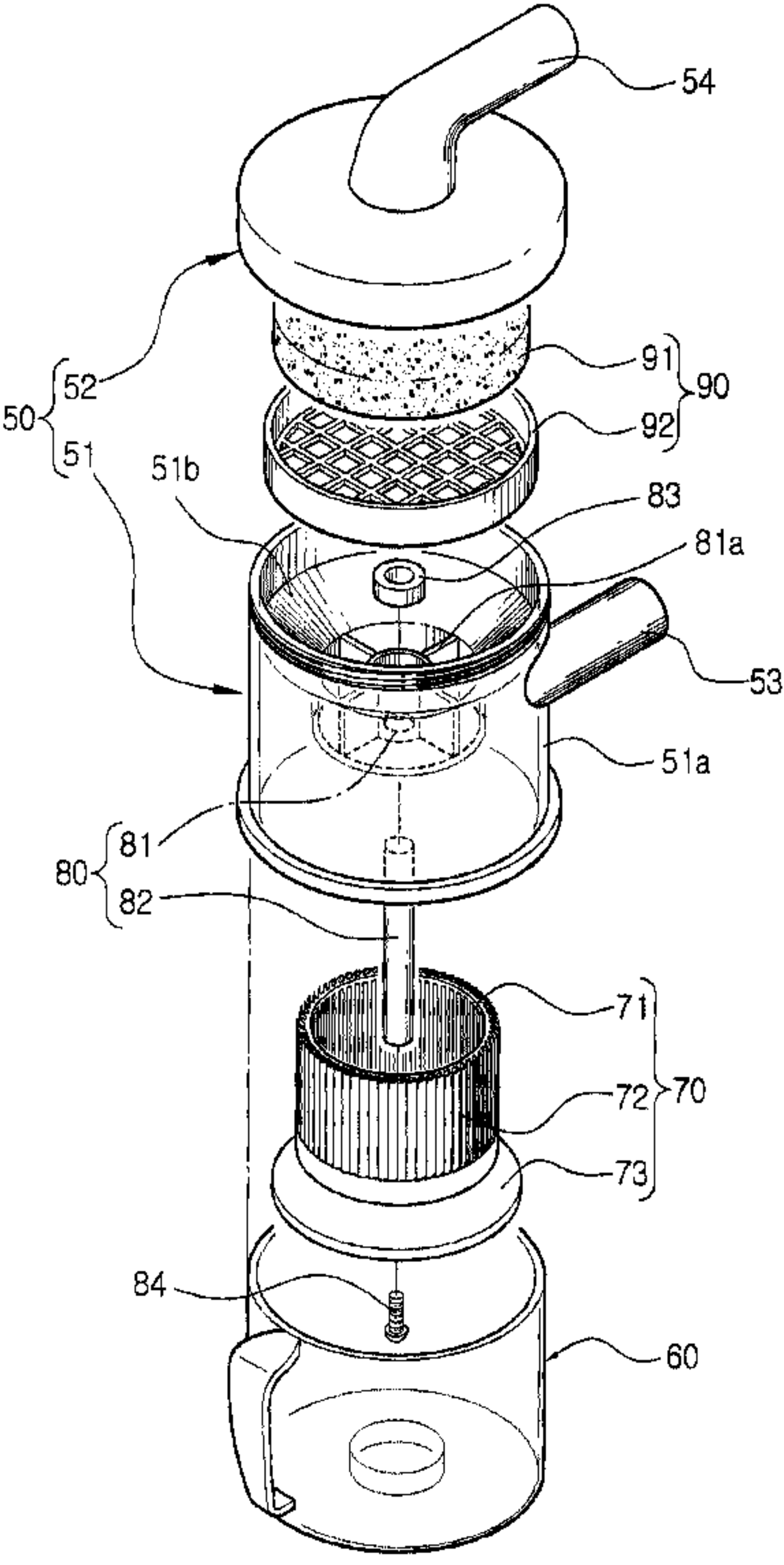
54
52
50
51
91
90
92
51b
83
81a
53
51a
81
80
82
71
72
70
73
84
60