May 15, 1934. W. T. BACON 1,958,603

LOCK

Filed Nov. 29, 1932

Fig. 1

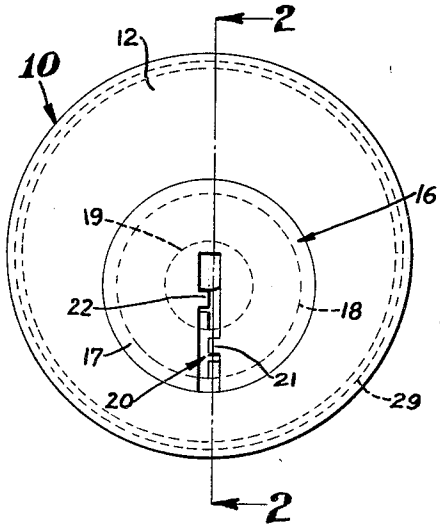

Fig. 2

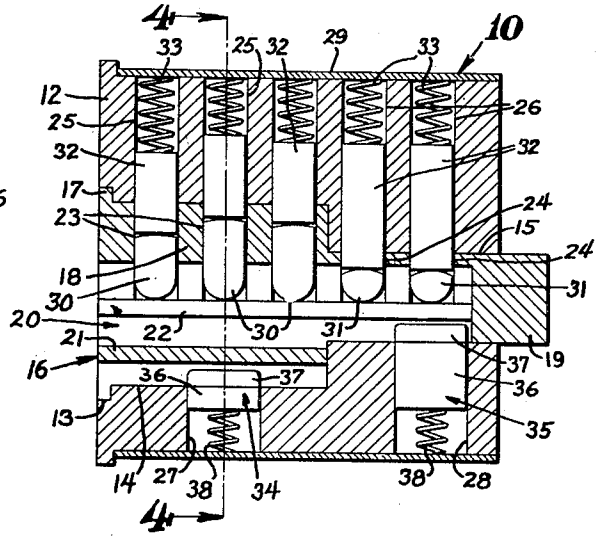

Fig. 3

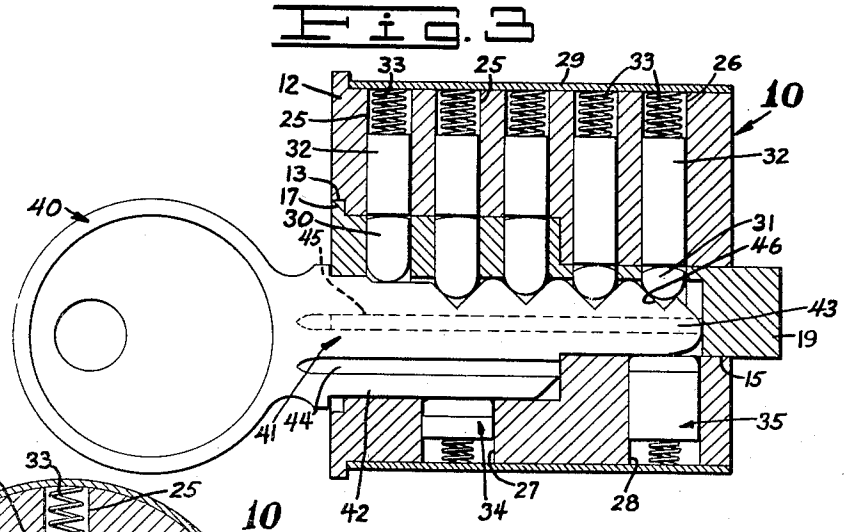

Fig. 4

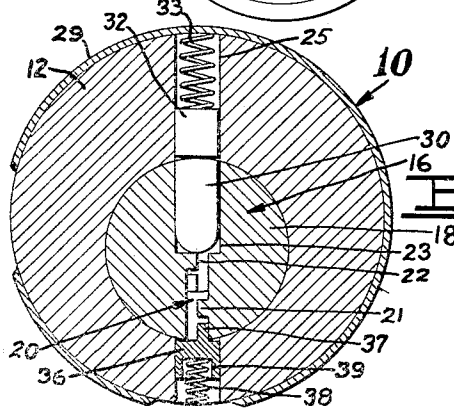

INVENTOR.
W. T. BACON
BY B. J. Craig,
ATTORNEY.

Patented May 15, 1934 1,958,603

UNITED STATES PATENT OFFICE

1,958,603

LOCK

William T. Bacon, Sacramento, Calif.

Application November 29, 1932, Serial No. 644,788

8 Claims. (Cl. 70—47)

This invention relates to improvement in locks.

The general object of the invention is to provide an improved lock of the rotatable cylinder and tumbler type.

A further object of the invention is to provide a lock with novel means to prevent surreptitious operation thereof.

Another object of the invention is to provide a lock of the class described wherein a plurality of tumblers and tumbler pins are provided which lock the cylinder against rotation and wherein other means are also provided for preventing rotation of the cylinder.

Other objects and the advantages of this invention will be apparent from the following description taken in connection with the accompanying drawing wherein:

Fig. 1 is a front view of my improved lock.

Fig. 2 is a section taken on line 2—2 of Fig. 1.

Fig. 3 is a view similar to Fig. 2 showing a key inserted in the lock.

Fig. 4 is a section taken on line 4—4 of Fig. 2.

Referring to the drawing by reference characters I have indicated my improved lock generally at 10. As shown the device 10 comprises a cylindrical casing 12 which includes an annular recess 13 at one end which communicates with a coaxial reduced annular recess 14 which in turn communicates with a coaxial reduced annular aperture 15. The axes of the recesses 13 and 14 and the aperture 15 are preferably offset from the axis of the casing 12.

Positioned in the casing 12 I provide a cylinder member 16 which includes a head 17, a reduced barrel portion 18 and a reduced stem portion 19. The head of the cylinder member is positioned in the recess 13 of the casing and the barrel portion 18 is positioned in the casing recess 14 while the stem portion 19 is positioned in the casing aperture 15. The stem 19 preferably extends beyond the rear face of the casing 12 and is adapted to have a locking bolt of any suitable type secured thereto in any desired manner.

Extending longitudinally in the cylinder 16 I provide a key slot 20 which opens through the front of the head 17 and terminates forward of the rear of the stem portion 19. In height the key slot 20 extends from a location spaced below the upper surface of the stem 19 downward and opens through the lower surface of the head 17, barrel 18 and the stem 19.

Extending into the key slot 20 from one side thereof I provide a flange 21 which is integral with the cylinder 16 and extending into the key slot from the opposite side I provide a flange 22. The flange 21 is spaced above the lower face of the barrel portion 18 and below the lower face of the stem portion 19 and extends from the open end of the key slot to the rear end of the barrel portion 18. The flange 22 is spaced intermediate the upper and lower faces of the stem portion 19 and extends the full length of the key slot 20.

The barrel portion 18 of the cylinder 16 includes a plurality of recesses 23 shown as three in number, which extend from the flange 22 upward to the outer face of the barrel and the stem portion 19 includes a plurality of similar recesses 24, shown as two in number, which extend from the flange 22 upward to the outer face of the stem.

The casing 12 includes a plurality of apertures 25 which are adapted to register with the barrel recesses 23 and a plurality of similar apertures 26 which are adapted to register with the stem recesses 24.

In the casing adjacent the barrel portion 18 of the cylinder 16 and opposite the apertures 25 I provide a rectangular aperture 27 and adjacent the stem portion of the cylinder and opposite the apertures 26 I provide a similar rectangular aperture 28.

Positioned on the casing 12 I provide a sleeve 29 which surrounds the casing and closes the apertures 25 and 26 and the apertures 27 and 28.

Positioned in each of the barrel apertures 23 I provide a cylindrical tumbler member 30 and positioned in each of the stem apertures 24 I provide similar tumbler members 31.

Positioned in each of the casing apertures 25 and 26 I provide a tumbler pin 32 and a coiled spring 33 one end of which engages the inner face of the sleeve 29 and the other end the upper face of its associated pin 32. When no key is positioned in the key slot 20 the coiled springs 33 resiliently urge the pins 32 downward which in turn retain the tumblers 30 and 31 in engagement with the flange 22 of the cylinder 16 as clearly shown in Figs. 2 and 4.

The length of the tumblers 30 and 31 are such that when no key is in the key slot 20 the lower ends of the pins 32 associated with the barrel tumblers 30 are positioned in the barrel recesses 23 and the lower ends of the pins 32 associated with the stem tumblers 31 are positioned in the stem recesses 24 as clearly shown in Fig. 2. In this position the pins 32 prevent rotation of the cylinder.

Positioned in the casing aperture 27 I provide

a dog member 34 and positioned in the casing aperture 28 I provide a similar dog member 35. Each of the dogs 34 and 35 include a body portion 36 which is of approximately the same size as the aperture in which it is positioned and a lip portion 37 which is the same length as the body portion and approximately half the width of the key slot 20. Positioned in each of the apertures 27 and 28 I provide a coiled spring 38 one end of which is positioned in a recess 39 provided in the body of the dog with which it is associated and the opposite end of which engages the inner face of the shell 29 (see Fig. 4).

When no key is positioned in the key slot 20 the springs 29 retain the dogs 34 and 35 in a raised position wherein the lips 37 thereof extend into the key slot 20. The lip 37 of the dog 34 extends into the key slot 20 directly below the flange 21 of the cylinder 16 and the lip 32 of the dog 35 extends into the key slot directly below the cylinder flange 22. When the lips 37 of the dogs 34 and 35 extend into the key slot 20 they prevent rotation of the cylinder 16 in relation to the casing 12.

In Fig. 3 I have indicated a key generally at 40 which is shaped to correctly fit and operate the lock 10. As shown the key 40 includes a shank 41 which comprises a barrel portion 42 and a reduced end or stem portion 43. The barrel portion 42 is approximately the same length as the barrel portion 18 of the cylinder 16 and the stem portion 43 of the key is approximately the same length as the length of the key slot 20 in the stem portion 19 of the cylinder 19. In one side of the key 40 I provide a recess 44 in which the cylinder flange 21 is adapted to be positioned and in the opposite side of the key I provide a recess 45 in which the cylinder flange 22 is adapted to be positioned. The top of the key is serrated in the usual manner as indicated at 46 to correctly position the tumblers 30 and 31 to unlock the device.

When the shank 41 of the key 40 is correctly positioned in the key slot 20 the serrated upper face of the shank 41 retains the tumblers 30 and 31 in a position wherein the tops thereof align with the dividing line between the cylinder and the casing. At the same time the lower face of the barrel portion 42 of the key shank retains the dog 34 in a position wherein the upper face of its associated lip 37 aligns with the dividing line between the cylinder and the casing and the lower face of the stem portion 43 of the key shank retains the lip 37 of the dog 35 in a similar position. Thus it will be seen that when the tumblers 30 and 31 and the dogs 34 and 35 are retained in the positions just described the cylinder 16 may be readily rotated in relation to the casing 12.

When the key 40 is withdrawn from the device 10 it will be readily seen that if a wire or other instrument is inserted in the key slot 20 and is successful in retaining the tumblers 30 in their correct raised positions to unlock the device the same instrument cannot engage the dogs 34 and 35 due to the flanges 21 and 22 of the cylinder 16. Also should a wire or other instrument be inserted into the key slot 20 and be successful in retaining the dog 34 in a lowered position to unlock the device the same instrument cannot engage the dog 35 due to the cylinder flange 21 or the tumblers 30 and 31 due to the cylinder flanges 21 and 22. Further, if a wire or other instrument is inserted in the key slot 20 and is successful in retaining the dog 35 in a lowered unlocked position the same instrument cannot engage the dog 34 due to the cylinder flange 21 or the tumblers 30 and 31 due to the cylinder flange 22.

From the foregoing description it will be apparent that I have provided a novel lock which is simple in construction and highly efficient in use.

Having thus described my invention, I claim:

1. In a lock, a casing, a cylinder rotatably mounted in said casing, said cylinder including a barrel portion and a reduced stem portion, a longitudinally extending key slot in said cylinder, a flange on said cylinder extending into said key slot from one side thereof, there being a plurality of spaced recesses in said cylinder, certain of said recesses being positioned in said barrel portion and the others in said stem portion, a plurality of apertures in said casing adapted to align with said cylinder recesses, a tumbler member in each of said cylinder recesses, and a tumbler pin in each of said casing recesses, means to resiliently urge said tumbler pins towards said cylinder, there being a plurality of apertures in said casing adjacent said key slot, one in said stem portion and one in said barrel portion, a dog in each of said last mentioned apertures, a portion of said dogs extending into said key slot, and means to urge said dogs towards said cylinder.

2. In a lock, a casing, a cylinder rotatably mounted in said casing, the axis of said cylinder being offset from the axis of said casing, said cylinder including a barrel portion and a coaxial stem portion, a longitudinally extending key slot in said cylinder, one side of said key slot opening longitudinally through one face of said cylinder, the opposite face of said key slot being closed, movable means in said casing and extending into said cylinder to normally prevent rotation of said cylinder, said means being spaced from said key slot, certain of said means extending into said cylinder intermediate the length of said barrel portion of said cylinder and other of said means extending into said cylinder intermediate the length of said stem portion of said cylinder, other movable means in said casing and spaced from said first means and extending into said key slot to prevent rotation of said cylinder, certain of said second means extending into said key slot intermediate the length of said barrel portion of said cylinder and other of said second means extending into said key slot intermediate said stem portion of said cylinder.

3. In a lock, a casing, a cylinder rotatably mounted in said casing, said cylinder including a barrel portion and a reduced stem portion, a longitudinally extending key slot in said cylinder, one side of said key slot opening longitudinally through the face of said barrel portion and a portion of said stem portion, the opposite side of said key slot being closed, a flange on said cylinder extending into said key slot from one side thereof, a second flange on said cylinder spaced from said first flange and extending into said key slot from the side opposite said first flange, there being a plurality of spaced recesses in said cylinder, said recesses extending into said cylinder a predetermined distance and being spaced from said open side of said key slot, certain of said recesses being positioned in said barrel portion and the others in said stem portion, a plurality of apertures in said casing adapted to align with said cylinder recesses, a tumbler member in each of said cylinder recesses, and a tumbler pin in each of said casing recesses, means to resiliently urge said tumbler pins towards said cylinder, there being an aperture in said casing adjacent

said key slot and intermediate the length of said barrel portion of said cylinder, a dog in said last mentioned aperture, a portion of said dog extending into said key slot, resilient means to urge said dog towards said cylinder, the portion of said dog extending into said key slot being positioned adjacent one face of said first cylinder flange.

4. In a lock, a casing, a cylinder rotatably mounted in said casing, a longitudinally extending key slot in said cylinder, a flange on said cylinder extending into said key slot from one side thereof, a second flange on said cylinder spaced from said first flange and extending into said key slot from the side opposite said first flange, there being a plurality of spaced recesses in said cylinder, said recesses extending into said cylinder a predetermined distance and being spaced from said open side of said key slot, there being a plurality of apertures in said casing adapted to align with said cylinder recesses, a tumbler member in each of said cylinder recesses, and a tumbler pin in each of said casing recesses, means to resiliently urge said tumbler pins towards said cylinder, said casing having an aperture adjacent said key slot, a dog in said last mentioned aperture, a portion of said dog being adapted to extend into said key slot, resilient means to urge said dog towards said cylinder, the portion of said dog extending into said key slot being positioned adjacent one face of said first cylinder flange, there being a second aperture in said casing, a slot, a dog in said second aperture, a portion of said second dog being extending into said key slot, and resilient means to urge said dog towards said cylinder, the portion of said dog extending into said key slot being positioned adjacent one face of said second cylinder flange.

5. In a lock, a casing, a cylinder rotatably mounted in said casing, the axis of said cylinder being offset from the axis of said casing, said cylinder including a barrel portion and a coaxial reduced stem portion, a longitudinally extending key slot in said cylinder, one side of said key slot opening longitudinally through the face of said barrel portion and a portion of said stem portion, the opposite side of said key slot being closed, a flange on said cylinder extending into said key slot from one side thereof, a second flange in said cylinder spaced from said first flange and extending into said key slot from the side opposite said first flange, there being a plurality of spaced recesses in said cylinder, said recesses extending into said cylinder from the face thereof opposite the open side of said key slot and terminating at said second flange, certain of said recesses being positioned in said barrel portion and others in said stem portion, a tumbler member positioned in each of said recesses, a plurality of apertures in said casing adapted to align with said cylinder recesses, a tumbler pin in each of said casing apertures, a sleeve surrounding said casing and closing said casing apertures, a spring member in each of said casing apertures engaging said sleeve and its associated tumbler pin, said springs resiliently urging said pins into engagement with said tumblers and said tumblers into engagement with said second cylinder flange, there being an aperture in said casing opposite said first apertures and intermediate the length of said barrel portion of said cylinder, a dog in said last mentioned aperture, said dog including a reduced lip extending into said key slot, a spring member urging said dog towards said cylinder, the lip of said dog extending into said key slot directly below said first cylinder flange.

6. In a lock, a casing, a cylinder rotatably mounted in said casing, said cylinder including a barrel portion and a reduced stem portion, a longitudinally extending key slot in said cylinder, one side of said key slot opening longitudinally through the face of said barrel portion and a portion of said stem portion, the opposite side of said key slot being closed, a flange on said cylinder extending into said key slot from one side thereof, a second flange on said cylinder spaced from said first flange and extending into said key slot from the side opposite said first flange, there being a plurality of spaced recesses in said cylinder, said recesses extending into said cylinder a predetermined distance and being spaced from said open side of said key slot, certain of said recesses being positioned in said barrel portion and the others in said stem portion, there being a plurality of apertures in said casing adapted to align with said cylinder recesses, a tumbler member in each of said cylinder recesses, and a tumbler pin in each of said casing recesses, means to resiliently urge said tumbler pins towards said cylinder, said casing having an aperture adjacent said key slot and intermediate the length of said barrel portion of said cylinder, a dog in said last mentioned aperture, a portion of said dog being adapted to extend into said key slot, resilient means to urge said dog towards said cylinder, the portion of said dog extending into said key slot being positioned adjacent one face of said first cylinder flange, there being a second aperture in said casing adjacent said key slot and intermediate the length of said stem portion of said cylinder, a dog in said second aperture, a portion of said second dog being adapted to extend into said key slot, resilient means to urge said dog towards said cylinder, the portion of said dog extending into said key slot being positioned adjacent one face of said second cylinder flange.

7. In a lock, a casing, a cylinder rotatably mounted in said casing the axis of said cylinder being offset from the axis of said casing, said cylinder including a barrel portion and a coaxial reduced stem portion, a longitudinally extending key slot in said cylinder one side of said key slot opening longitudinally through the face of said barrel portion and a portion of said stem portion, the opposite side of said key slot being closed, a flange on said cylinder extending into said key slot from one side thereof, a second flange in said cylinder spaced from said first flange and extending into said key slot from the side opposite said first flange, a plurality of spaced recesses in said cylinder, said recesses extending into said cylinder from the face thereof opposite the open side of said key and terminating at said second flange, certain of said recesses being positioned in said barrel portion and others in said stem portion, a tumbler member positioned in each of said recesses, a plurality of apertures in said casing adapted to align with said cylinder recesses, a tumbler pin in each of said casing apertures, a sleeve surrounding said casing and closing said casing apertures, a spring member in each of said casing apertures engaging said sleeve and its associated tumbler pin, said springs resiliently urging said pins into engagement with said tumblers and said tumblers into engagement with said second cylinder flange, there being an aperture in said casing opposite said first apertures and intermediate the length of said barrel portion of said cylinder, a dog in said last mentioned aperture, said dog including a reduced lip extending into said key slot, a spring member resiliently urging said dog towards said

cylinder, said lip of said dog extending into said key slot directly below said first cylinder flange, there being a second aperture in said casing opposite said first apertures and intermediate the length of said stem portion of said cylinder, a dog in said second aperture, said second dog including a reduced lip extending into said key slot, a spring member resiliently urging said second dog towards said cylinder, said lip of said second dog extending into said key slot directly below said second flange.

8. In a lock, a casing, a cylinder including a main portion and a reduced end portion and rotatably mounted in said casing, a longitudinally extending key slot in said cylinder, means to normally prevent rotation of said cylinder operable by a key in said slot, there being an aperture in said casing opposite to the main portion of the cylinder, a dog in said last mentioned aperture, said dog including a reduced lip extending into said key slot, a spring member resiliently urging said dog towards said cylinder, there being a second aperture in said casing opposite to said reduced end portion, a dog in said second aperture, said second dog including a reduced lip extending into said key slot, and a spring member resiliently urging said second dog towards said cylinder.

WILLIAM T. BACON.