June 25, 1940. J. R. MUSGRAVE 2,205,929

PENCIL ATTACHMENT

Original Filed June 3, 1935

Fig. 2.

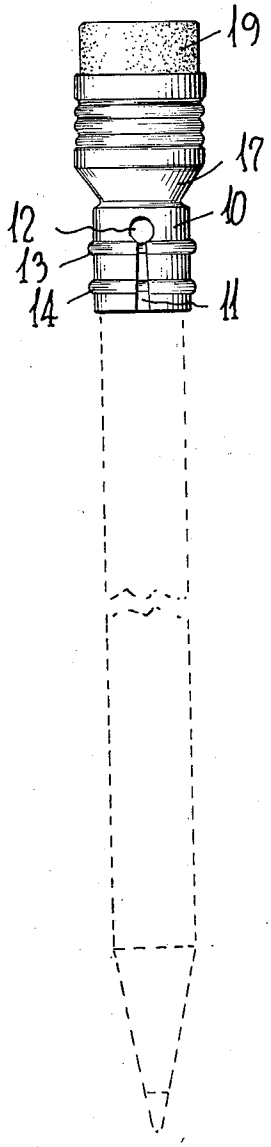

Fig. 1.

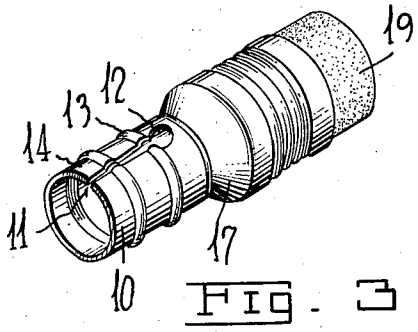

Fig. 3.

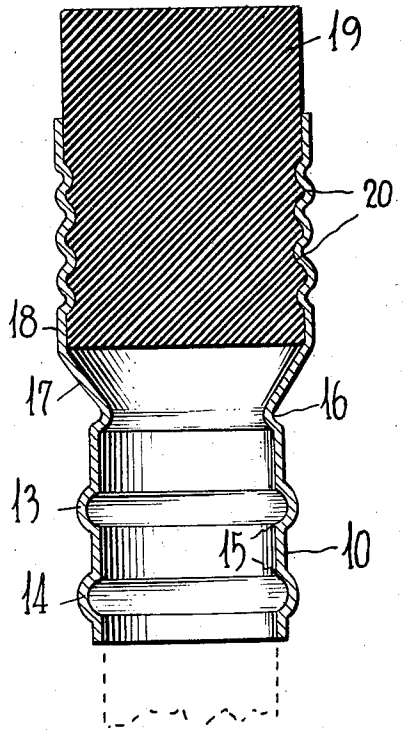

Inventor

James R. Musgrave,

By Carl Fenning

his Attorney

Patented June 25, 1940 2,205,929

UNITED STATES PATENT OFFICE

2,205,929

PENCIL ATTACHMENT

James R. Musgrave, Shelbyville, Tenn.; The Peoples National Bank, Shelbyville, Tenn., and The Third National Bank, Nashville, Tenn., administrators of said James R. Musgrave, deceased, assignors to Musgrave Pencil Company, Inc., a corporation of Tennessee

Continuation of applications Serial No. 24,735, June 3, 1935, and Serial No. 107,304, October 24, 1936. This application May 2, 1938, Serial No. 205,632

1 Claim. (Cl. 120—38)

The invention relates particularly to a removable attachment for a lead pencil which carries a removable and replaceable eraser.

It has been found that in many instances the lead pencil to which an eraser is permanently attached may be used up while the eraser remains good and at least partially unused. In other instances it is found that the eraser is used up before the pencil is entirely consumed. It is a purpose of the present invention to provide means by which a pencil may always be supplied with an eraser. It has been found convenient to employ an eraser which is somewhat larger than the pencil with which it is associated and the present invention is also directed to this end.

In general the invention comprises a slotted tube to receive a pencil at one end, which tube is extended and enlarged at the other end to receive an eraser.

One specific embodiment of the invention is illustrated in the accompanying drawing in which Figure 1 is a perspective view of a pencil attachment embodying the invention. Fig. 2 is a front elevation of the pencil attachment, a pencil being illustrated in dotted lines in place in the attachment. Fig. 3 is a transverse vertical section of a pencil attachment on an enlarged scale. The drawing is not made to exact scale and it is to be understood that the sizes, proportions and forms, both relative and absolute, of the various details may be varied and changed in other embodiments of the invention.

The main portion of the attachment will be made preferably of metal. Preferably it will be very thin and the metal of which it is composed will be resilient and elastic to some extent. A tube 10, shown as cylindrical, may be formed to receive the end of a pencil. The tube or the pencil may be round, hexagonal or of any suitable shape. Preferably the internal diameter of the tube portion 10 will be slightly less than the external diameter of the pencil with which it is to be used. In order to conveniently accommodate pencils of slightly varying diameters and in order to assist in grasping the pencil the tube 10 may be provided with a narrow longitudinal slot 11 which preferably will extend through nearly the entire length of the tube 10. The slot 11 may run to the lower or open end of the tube 10 and preferably terminate at nearly the inner end of the tube 10 in a somewhat enlarged circular opening 12. As illustrated in Fig. 1 the slot 11 may taper somewhat being slightly narrower at its open end. When the pencil is inserted and extends the tube 10 the sides of the slot 11 may become substantially parallel or may diverge a little towards their open end as illustrated in Fig. 2. It is to be remembered that the entire structure is very small in actual dimensions and the tapering effect in Figs. 1 and 2 may be somewhat exaggerated, but is so shown to clearly illustrate the tendency.

At about the point where the circle 12 joins the slot 11 there may be formed a circumferential rib 13 extending about the tube 10 from one edge of the slot 11 to the other edge of the slot 11. Reinforcement at this point may be particularly useful as the change in outline from slot to circle may tend to produce an especial weakness. Below the rib 13 and somewhat in from the open end of the tube 10 may be provided a second circumferential rib or ridge 14 similarly extending about the tube 10 from edge to edge of the slot 11. The ribs 13 and 14 bulge outwardly so as not to diminish the inner circumference of the tube 10. The ribs 13 and 14 form reinforcements for the thin, relatively fragile metal of the tube 10. They add strength to the tube 10 and tend to insure that when the pencil is thrust therein, and also while in use, the tube 10 does not crumple, buckle or otherwise undesirably deform. The inner corners or edges 15 of the ribs 13 and 14, and especially those which form the lower boundaries, that is those toward the open end of the tube 10, of the internal channels formed by the ribs 13 and 14 may be made sharply angular and clearly defined as indicated particularly in Fig. 3. Thus when the pencil is in position the tendency of the tube 10 will be to closely and resiliently hug the pencil and any outward movement of the pencil will tend to cause the sharp edges 15 to be pressed upon the pencil and tend to bite into it and to the tend to add to the resistance to removal of the pencil. Thus there may be procured a fit and engagement of the tube 10 on the pencil, and without piercing, approximating a rigid connection so that the fitting may not be easily removed or displaced even when the eraser is being used and unusual pressure may be placed thereon.

As the pencil enters the tube 10 there is a tendency to squeeze or compress the pencil and the pencil in turn tends to expand the tube 10 and as the end of the pencil reaches that portion of the tube 10 above the hole 12 this squeezing of the pencil and expansion of the tube become particularly emphasized and there may be a tendency to split or break the thin metal of the tube 10 especially at this point.

At the upper end of the tube 10 may be pro-

vided an inwardly projecting rib or ridge 16. This rib provides reinforcement of the metal and tends to add to its strength against the expanding force of the pencil. The rib 16 extending inwardly also forms a stop against which the pencil may abut thus limiting the extent of the entrance of the pencil into the tube 10. This assures proper positioning of the device upon the end of the pencil without forming a shoulder or other shape on the pencil and without relying on engagement of the eraser with the end of the pencil for this purpose. The rib 16 thus limits the portion of the metal of the fitting which may be subject to the extra expanding force and also insures that the pencil may not be pushed against the overlying eraser which might tend to force the eraser from the fitting.

Integral with the tube 10 and the rib 16 and extending upward therefrom and flanging outward therefrom is a reinforcing and connecting band 17. It will be seen that the outwardly expanding tendency of the pencil in the tube 10 will be resisted by the rib 16 and may also tend to distribute stress through the collar member 17. Since the collar member 17 spreads outwardly some of the expanding stress caused by the pencil will tend to run longitudinally on the band 17 so that the tendency of the metal to resist the stress is not merely limited to the thickness of the metal but is resisted to some extent by the length of the metal in the band 17. In this way some of the stress applied transversely to the metal of the tube 10 is shifted to longitudinal stress in the band 17 which thus very materially reinforces the tube 10. The annular tapered band 17 with its larger end disposed outwardly toward the eraser receiving and of the device also presents an abutment which is so directed that the fingers may be placed on the small end or tube 10 and against this abutment to get a good grip to remove the device from the pencil.

At the upper end of the flanging collar 17 is provided a socket 18 for an eraser 19. The eraser socket which may be of any suitable shape is here shown in tubular form and is preferably larger in diameter than the pencil holding tube 10 and may thus hold and receive an eraser 19 which is larger than the pencil as is desired in modern practice. The eraser socket 18 is illustrated as provided with a plurality of ribs 20 which form an irregular interior surface against and past which the eraser 19 may be forced so as to be more or less rigidly held. Since the socket 18 is not nicked or pierced into the rubber it is evident that the eraser 19 may be removed and a new eraser replaced when desired. The form and shape of the eraser are not essential to the present invention. When desired a flat eraser may be employed and the crown or exposed portion of the eraser may be larger than the socket 18 and may be of any suitable or desired form. The head portion of the eraser may be given distinctive shapes for utilitarian, ornamental or advertising purposes and the like. Pressure exerted when using the eraser may tend to bend the metal but the stress so caused may be transferred in part at least to longitudinal compression of the band 17.

The slot 11 permits the resilient tube 10 to spread as the end of the pencil is inserted in it and the other features provide the desired strength notwithstanding this slotting of the pencil receiving end.

For purposes of economy, pleasing appearance and usefulness it may be desired to make the attachment relatively small and its parts conveniently proportioned. It will be observed that the pencil tube portion 10 illustrated is less than half the length of the entire fitting and likewise the eraser seat portion 18 may be less than half the length of the entire fitting. It has been found that such an arrangement is economical and efficient and in a device made in accordance with the present invention offers sufficient gripping hold upon the pencil to insure the fitting remaining and being held in place on the pencil.

The present application is a continuation of applications Ser. No. 24,735 filed June 3, 1935 and Ser. No. 107,304, filed October 24, 1936.

I claim as my invention:

A pencil attachment made of thin resilient metal comprising a tube adapted to receive a pencil of slightly larger diameter than the internal diameter of the tube, a narrow longitudinal slot extending through the major portion of the length of the tube and tapering inwardly to the open end of the tube and provided at its inner end with an enlarged circular terminal close to the inner end of the tube, an outwardly projecting circumferential rib at about the junction of slot and circular terminal and extending to both edges of the slot, a second outwardly projecting circumferential rib between the first rib and the open end of the tube and extending to both edges of the slot, sharp inner edges to the recesses underlying both ribs extending circumferentially about the inner surface of the tube, an inwardly extending circumferential rib above the circular terminal and at the inner end of the tube and forming a pencil stop and a reinforcement for the tube, an integral outwardly flaring band above the last mentioned rib and reinforcing the tube especially at its upper end, an eraser socket extending above the band and extending laterally of a line continued upwardly through the slot, and means in the eraser socket to engage and hold an eraser.

JAMES R. MUSGRAVE.