(12) INTERNATIONAL APPLICATION PUBLISHED UNDER THE PATENT COOPERATION TREATY (PCT)

(19) World Intellectual Property Organization
International Bureau

(43) International Publication Date
28 November 2002 (28.11.2002)

PCT

(10) International Publication Number
WO 02/094348 A1

(51) International Patent Classification[7]: A61M 1/12, 31/00, 39/20

(21) International Application Number: PCT/AU02/00625

(22) International Filing Date: 21 May 2002 (21.05.2002)

(25) Filing Language: English

(26) Publication Language: English

(30) Priority Data:
PR 5142 21 May 2001 (21.05.2001) AU

(71) Applicant *(for all designated States except US)*: **VENTRASSIST PTY LTD** [AU/AU]; 126 Greville Street, Chatswood, NSW 2067 (AU).

(72) Inventors; and
(75) Inventors/Applicants *(for US only)*: **WOODARD, John, Campbell** [AU/AU]; 27 Wareemba Avenue, Thornleigh, NSW 2120 (AU). **TANSLEY, Geoffrey, Douglas** [AU/AU]; 41 Sprigg Place, Mt Colah, NSW 2079 (AU).

(74) Agent: **WALLINGTON-DUMMER**; P.O. Box 297, Rydalmere, NSW 1701 (AU).

(81) Designated States *(national)*: AE, AG, AL, AM, AT, AU, AZ, BA, BB, BG, BR, BY, BZ, CA, CH, CN, CO, CR, CU, CZ, DE, DK, DM, DZ, EC, EE, ES, FI, GB, GD, GE, GH, GM, HR, HU, ID, IL, IN, IS, JP, KE, KG, KP, KR, KZ, LC, LK, LR, LS, LT, LU, LV, MA, MD, MG, MK, MN, MW, MX, MZ, NO, NZ, OM, PH, PL, PT, RO, RU, SD, SE, SG, SI, SK, SL, TJ, TM, TN, TR, TT, TZ, UA, UG, US, UZ, VN, YU, ZA, ZM, ZW.

(84) Designated States *(regional)*: ARIPO patent (GH, GM, KE, LS, MW, MZ, SD, SL, SZ, TZ, UG, ZM, ZW), Eurasian patent (AM, AZ, BY, KG, KZ, MD, RU, TJ, TM), European patent (AT, BE, CH, CY, DE, DK, ES, FI, FR,

[Continued on next page]

(54) Title: STAGED IMPLANTATION OF VENTRICULAR ASSIST DEVICES

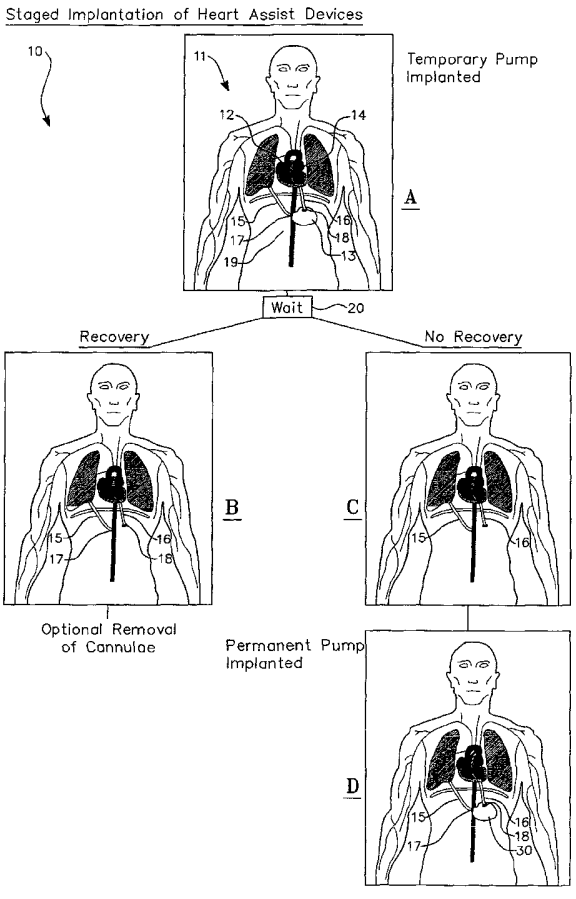

(57) Abstract: An implantation regime for a ventricular assist device (VAD) comprising implanting a first VAD (13) intended for short term use for a predetermined period of time and then determining whether the heart can operate without further assistance after this period of time. A second VAD (30) intended for long term use may then be implanted if necessary. Also disclosed are percutaneous leads (40) that have surface treatments (45, 47) to enable tissue ingrowth in certain areas and prevent tissue ingrowth in other areas, and an embolisation device (21, 22) carrying a coagulating material (27) for sealing an implanted cannula (15, 16) between the use of the first and second VADs.

WO 02/094348 A1

GB, GR, IE, IT, LU, MC, NL, PT, SE, TR), OAPI patent (BF, BJ, CF, CG, CI, CM, GA, GN, GQ, GW, ML, MR, NE, SN, TD, TG).

For two-letter codes and other abbreviations, refer to the "Guidance Notes on Codes and Abbreviations" appearing at the beginning of each regular issue of the PCT Gazette.

Published:

— *with international search report*

STAGED IMPLANTATION OF VENTRICULAR ASSIST DEVICES

The present invention relates to systems and devices for the implantation of ventricular assist devices and, more particularly, to such systems and devices suited to a staged regime.

BACKGROUND

Blood pumps are known for the purpose of assisting the pumping function of a heart in a mammal.

In one particular form a class of pumps known as "ventricular assist devices" assist, by pumping, the action of the left ventricle of the heart.

Blood pumps suited for this task include those disclosed in US6,227,797 (Watterson et al) and US5,470,208 (Kletschka).

At the present time such pumps are relatively expensive, partly due to current relatively low production runs and partly because of the relatively expensive materials which must be utilized for the task of pumping blood so as to maximize reliability of the pump and minimize the possibility of blood damage.

It has been observed that, in some patients, the "assist" function provided by a ventricular assist device permits the heart to recover function to the point where

the ventricular assist device can be removed and the patient's own heart takes over full pumping function.

Unfortunately, to date, no way has been found to predict the likelihood of a temporary assist leading to satisfactory or sufficient recovery of heart pump function.

It is an object of the present invention, in at least preferred embodiments, to provide a cost effective regime for the use of blood pumps and which takes into account the abovementioned problems.

BRIEF DESCRIPTION OF INVENTION

Accordingly, in one broad form of the invention there is provided an implantation regime for a ventricular assist device comprising:

(a) providing a first ventricular assist device for connection via a first ventricular assist device first connector and a first ventricular assist device second connector to a heart so as to assist heart function for a first predetermined period of time;

(b) providing a second ventricular assist device for connection via a second ventricular assist device first connector and a second ventricular assist device second connector to a heart so as to assist heart function for a second indeterminate period of time

commencing immediately and contiguously following said first predetermined period of time.

Preferably said first ventricular assist device is adapted for short term use.

Preferably said first ventricular assist device is adapted for short term use comprising a period extending in the range 0 to 6 months.

Preferably said first ventricular assist device is adapted for short term use comprising a period extending in the range 0 to 3 months.

Preferably said second ventricular assist device is adapted for long term use.

Preferably said second ventricular assist device is adapted for long term use comprising a period of 1 to 20 years.

Preferably said second ventricular assist device is adapted for long term use comprising a period of 1 to 10 years.

Preferably said first ventricular assist device is made by a low cost process.

In a particular preferred form components of said first ventricular assist device are made by an injection moulding process.

In an alternative preferred form components of said first ventricular assist device are made by a vacuum casting process.

Preferably said first ventricular assist device includes a pump casing made from plastic components.

Preferably said first ventricular assist device includes a pump rotor made from a plastic material.

Preferably said second ventricular assist device includes a pump casing made from a metallic material.

Preferably said second ventricular assist device includes a rotor made from a metallic material.

Preferably said second ventricular assist device includes a pump casing made from a ceramic material.

Preferably said second ventricular assist device includes a rotor made from a ceramic material.

In an alternative particular form said device comprises a sac-type device.

Preferably said heart is connectable to said first ventricular assist device by means of a respective first cannula and second cannula interposed between said heart and said first connector and said heart and said second connector respectively.

Preferably said second ventricular assist device is connectable to said heart via said first cannula and said

second cannula by means of said second ventricular assist device first connector and said second ventricular assist device second connector respectively.

In a further broad form of the invention there is provided a test procedure comprising the connection of a first ventricular assist device so as to assist a diseased heart for a first predetermined period of time; monitoring operation of said heart over said predetermined period of time so as to determine whether said heart can operate without the further assistance of said first ventricular assist device.

Preferably said first ventricular assist device incorporates short term life features (necessitated by reduced cost of manufacturing) which render said first ventricular assist device suited to operation over a short life span.

Preferably said short term life features include use of plastic materials in one or more of the pump casing and pump rotor of said first ventricular assist device.

Preferably said short life span comprises a period of up to 6 months.

Preferably said short life span comprises a period of up to 3 months.

In yet a further broad form of the invention there is provided a method of mechanically assisting a heart to pump blood; said method comprising releasably, sealingly connecting via a first cannula and a second cannula a first ventricular assist device so as to at least assist said heart to pump said blood; during a first predetermined period of time, ascertaining if mechanical assistance continues to be required and, if so, substituting a second ventricular assist device for said first ventricular assist device at the end of said first predetermined period of time.

In yet a further broad form of the invention there is provided, in combination, a first ventricular assist device adapted for short term use and a second ventricular assist device adapted for long term use.

In yet a further broad form of the invention there is provided a first cannula having a proximal end for connection to the aorta; a second cannula having a proximal end for connection to a ventricle; said first cannula having a distal end including connection means for releasably, sealingly connecting said distal end of said first cannula to either an inlet of a first ventricular assist device or an inlet of a second ventricular assist device; a second cannula having a distal end including

connection means for releasably, sealingly connecting said distal end of said second cannula to either an outlet of said first ventricular assist device or an outlet of said second ventricular assist device; said second ventricular assist device adapted for substitution for said first ventricular assist device following a first predetermined period of operation of said first ventricular assist device.

In yet a further broad form of the invention there is provided an embolisation device adapted for insertion into either said first cannula or said second cannula; said embolisation device including a stem having an end adapted to deliver a coagulating material to a sealing position within said proximal end of said first cannula or said second cannula.

In yet a further broad form of the invention there is provided a percutaneous lead for carriage of power to said device; said lead having a surface; said surface including regions which permit incorporation of the percutaneous lead surface into the surrounding tissue and a region or regions which will not allow incorporation. The region allowing incorporation may extend the entire length of the percutaneous lead or none of it or it may extend over regions near the ventricular assist device sufficient only

to help anchor the device in place or near to the site where the percutaneous lead exits the body and provide good closure to the wound so as to prevent or reduce the occurrence of infection. In addition other areas on the surface of the percutaneous lead may have properties which prevent incorporation so as to facilitate easy removal of the lead at the end of the predetermined period of implantation of the first ventricular assist device.

BRIEF DESCRIPTION OF DRAWINGS

One embodiment of the present invention will now be described with reference to the accompanying drawings wherein:

Fig. 1 is a flow diagram illustrating steps in an implantation regime in accordance with a first preferred embodiment of the present invention.

Fig. 2 is a side section view of cannulae and an embolisation tool in accordance with a particular embodiment of the present invention.

Fig 3 is a cross-section through a patient's chest and abdomen showing the ventricular assist device in place and the path of the percutaneous lead from the exit site in the skin to the ventricular assist device.

DETAILED DESCRIPTION OF PREFERRED EMBODIMENT

With reference to Fig. 1 comprising sub-diagrams 1A, 1B, 1C and 1D there is illustrated steps in an implantation regime 10 according to a first preferred embodiment of the present invention.

In Fig. 1A a patient 11 having a heart 12 in need of at least an assisted pumping action is fitted with a first ventricular assist device 13 arranged, in this instance, to provide a pumped blood flow "in parallel" across left ventricle 14 of heart 12.

In this instance the fluid connection is effected by first cannula 15 and second cannula 16 as illustrated in Fig. 1.

More particularly first cannula 15 sealingly connects via first connector 17 to ventricular assist device 13 whilst second cannula 16 sealingly connects to ventricular assist device 13 by way of second connector 18.

In this instance the length of cannulae 15, 16 is such as to permit first ventricular assist device 13 to be placed in the abdomen 19 of patient 11.

As will be discussed further below the intention is that first ventricular assist device 13 is to be utilized for a relatively short predetermined period of time, typically up to approximately 3 to 6 months. This

predetermined period of time will be sufficient to monitor the function of heart 12 so as to determine whether the assistance provided by first ventricular assist device 13 is sufficient to allow full or substantial recovery of heart 12 to the point where no ventricular assist device is required.

In this event, as shown in Fig. 1B, at the end of the predetermined period of time 20 the first ventricular assist device 13 is removed from the abdomen 19 and first connector 17 and second connector 18 sealed.

In a particularly preferred form, as illustrated in Fig. 2, cannulae 15, 16 are sealed internally at a point sufficiently close to the heart 12 that there is no need to remove cannulae 15, 16 at the time that first ventricular assist device 13 is removed.

Sealing can be effected by use of a first embolisation tool 21 and a second embolisation tool 22 for respective first cannula 15 and second cannula 16.

Each tool 21, 22 comprises an elongate stem 23, 24 respectively having sealing caps 17A, 18A respectively at a first end (refer Fig. 2) and a carrier surface 25, 26 at respective second ends.

The carrier surfaces 25, 26 are adapted to carry a coagulating material 27. The sealing caps 17A, 18A are

adapted to be sealingly connected to first connector 17 and second connector 18 respectively upon insertion of the entire length of stems 23, 24 into cannulae 15, 16.

The length of stems 23, 24 is selected so that when tools 21, 22 are entirely inserted within cannulae 15, 16 the carrier surfaces 25, 26 are positioned so as to deliver coagulating material 27 to sealing positions 28, 29 which are sufficiently close to the heart 12 that, upon sealing of cannulae 15, 16 at positions 28, 29 there is no requirement to remove cannulae 15, 16 from the body.

Typically it will be clear within a predetermined period of between one and three months of use of first ventricular assist device 13 as to whether sufficient recovery of heart 12 will be made that the option of removal of first ventricular assist device 13 and appropriate sealing or removal of cannulae 15, 16 can take place as outlined in step B of Fig. 1.

Once the predetermined period 20 has expired and it is judged that heart 12 is unlikely to recover then, as per steps C and D in Fig. 1 first ventricular assist device 13 is removed and immediately replaced with second ventricular assist device 30.

The replacement is performed by disconnecting first connector 31 of first VAD 13 from first connector 17 of

first cannula 15 and disconnecting second connector 33 of first VAD 13 from first connector 18 of second cannula 16, withdrawing first ventricular assist device 13 from abdomen 19 and immediately substituting therein second ventricular assist device 30 and then connecting first connector 32 of second ventricular assist device 30 to first cannula 15 and second connector 34 of second ventricular assist device 30 to second cannula 16 by way of respective first connections 17, 18 of cannulae 15, 16.

Ideally, immediately prior to disconnection of first ventricular device 13, cannulae 15,16 are clamped so no air can enter or blood leak out. The clamps are maintained while second ventricular assist device 30 is connected to the same cannulae. The clamps are removed once connection is completed.

With reference to Fig. 3 there is illustrated an exemplary ventricular assist device 13, 30 having respective first connectors 31, 32 and respective second connectors 33, 34 for the passage of blood through the device.

The ventricular assist device 13, 30 requires power which is conducted through percutaneous lead 40 from outside of the body via exit site 44.

To facilitate the removal of the percutaneous lead 40 which carries electrical energy and control to the ventricular assist device 13 (and subsequently second ventricular assist device 30), the outer surface of the percutaneous lead 40 may be treated so as to prevent the incorporation into surrounding tissue 41 of the percutaneous lead 40. Such surface treatment may extend the entire length of the percutaneous lead 40, or may be terminated just below the surface 43 of the skin 42 so as to allow full incorporation at the exit site 44 and hence a barrier to infection. An example of surface treatment of the percutaneous lead 40 is the use of silicone rubber which naturally resists incorporation. Incorporation at or near the exit site 44 may be achieved through the use of adhesively bonded woven velour 45 or other material or surface treatment which will provide tissue ingrowth as the outermost surface of the percutaneous lead in this region. Alternatively the surface treatment can comprise texturing of surface 46 of lead 40.

As shown in inset 1 in Fig. 1B the texturing of surface 46 of lead 40 can be such that ingrowth of tissue 41 can be only mildly anchored, for example by the use of a pyramid-shaped texture whereby there is little anchoring of tissue to surface 46. Alternatively the texturing can include a

labyrinth arrangement such as illustrated in inset 2 of Fig. 3 wherein tissue 41 can follow a labyrinth path through the interstices 48 of labyrinth texture 47.

As previously stated the texture can extend the entire length of lead 40 within the body from the exit site 44 through to device 13, 30. In the alternative the texturing may be at selected and predetermined locations.

The texturing itself can be tailored whereby the degree of tissue ingrowth into the surface 46 is controlled and tailored as a function of displacement along the surface of lead 40.

The surface can be tailored to provide a high degree of ingrowth such as that provided by inset 2 or can be tailored to provide only minimal ingrowth as, for example, provided in inset 1.

It is to be noted that, because of the location of both first ventricular assist device 13 and second ventricular assist device 30 in abdomen 19, permitted by appropriate selection of cannulae 15, 16 it follows that the substitution of second ventricular assist device 30 for first ventricular assist device 13 may take place without patient ventilation or formal heart bypass during the procedure because there is no need to open the chest cavity of patient 11. This arrangement thereby may significantly

limit risk to the patient as compared with the situation where general anaesthesia or heart bypass is required.

Second ventricular assist device 30 is intended for long term operation which is to say for many years, ideally extending to beyond the expected lifetime of patient 11.

In particular both first ventricular assist device 13 and second ventricular assist device 30 will, ideally, share the same surgically created pocket in abdomen 19.

Broadly, it will be appreciated that first ventricular assist device 13 is intended for short term use and thereby can have its characteristics selected for short term use whilst second ventricular assist device 30 is intended for long term use and therefore can have its characteristics selected for long term use.

By way of example first ventricular assist device 13 can take the form of almost any blood pump including those disclosed in US6,227,797 (Watterson et al) and US5,470,208 (Kletschka) provided only that the blood pump is sized to fit in the pocket created in abdomen 19. In particular the first ventricular assist device 13 may comprise an axial or centrifugal pump, or sac-type device. Its impeller may be suspended in any number of ways including mechanically, magnetically and hydrodynamically or by a combination of these. In the case of a sac-type device urging of the

blood through the device may be caused by the reciprocating action of a pusher-plate or similar mechanism in a sac-type device.

Its components can be made using mass production techniques and utilising less expensive materials than for the long life second ventricular assist device.

In particular the components comprising the pump casing and internal surfaces and rotating parts can be made from plastic materials including polymeric materials.

Coatings (such coatings not necessarily having a significantly long life) can be applied so as to increase blood compatibility. It is noted that some plastic materials such as covalently bonded heparin are particularly suited to receive and support such coatings. The Carmeda process can be utilized to perform the covalent bonding of Heparin. In addition or alternatively the coating may constitute a slow-release antibiotic.

In a further particular form the first ventricular assist device 13 adapted for short term use need not be hermetically sealed. Instead it may comprise one or more components in respect of which slow permeation of body fluids is acceptable. Examples of slow permeation materials which may be suitable include polypropylene, epoxy or nylon.

Conversely, second ventricular assist device 30 is constructed for long term (which is to say much greater than 3 months and typically, of the order of many years) reliable operation and can embody, for example, the principles of rotor support described in US6,227,797 (Watterson et al) and US5,470,208 (Kletschka). In this instance, suitable materials from which to construct the pump casing and/or the pump rotor for reliable, long term operation include hermetically welded titanium alloy.

The above describes only some embodiments of the present invention and modifications, obvious to those skilled in the art can be made thereto without departing from the scope and spirit of the present invention.

CLAIMS

1. An implantation regime for a ventricular assist device comprising:

(a) providing a first ventricular assist device for connection via a first ventricular assist device first connector and a first ventricular assist device second connector to a heart so as to assist heart function for a first predetermined period of time;

(b) providing a second ventricular assist device for connection via a second ventricular assist device first connector and a second ventricular assist device second connector to a heart so as to assist heart function for a second indeterminate period of time commencing immediately and contiguously following said first predetermined period of time.

2. The regime of Claim 1 wherein said first ventricular assist device is adapted for short term use.

3. The regime of Claim 1 or Claim 2 wherein said first ventricular assist device is adapted for short term use comprising a period extending in the range 0 to 6 months.

4. The regime of Claim 1 or Claim 2 wherein said first ventricular assist device is adapted for short term use comprising a period extending in the range 0 to 3 months.

5. The regime of any previous claim wherein said second ventricular assist device is adapted for long term use.

6. The regime of Claim 5 wherein said second ventricular assist device is adapted for long term use comprising a period of 1 to 20 years.

7. The regime of Claim 5 wherein said second ventricular assist device is adapted for long term use comprising a period of 1 to 10 years.

8. The regime of any one of claims 1 to 7 wherein said first ventricular assist device is made by a low cost process.

9. The regime of any one of claims 1 to 7 wherein said first ventricular assist device are made by an injection moulding process.

10. The regime of any one of claims 1 to 7 wherein said first ventricular assist device are made by a vacuum casting process.

11. The regime of any one of Claim s1 to 7 wherein said first ventricular assist device includes a pump casing made from plastic components.

12. The regime of any one of Claims 1 to 7 wherein said first ventricular assist device includes a pump rotor made from a plastic material.

13. The regime of any one of Claims 1 to 7 wherein said second ventricular assist device includes a pump casing made from a metallic material.

14. The regime of any one of Claims 1 to 7 wherein said second ventricular assist device includes a rotor made from a metallic material.

15. The regime of any one of claims 1 to 7 wherein said second ventricular assist device includes a pump casing made from a ceramic material.

16. The regime of any one of claims 1 to 7 wherein said second ventricular assist device includes a rotor made from a ceramic material.

17. The regime of any one of Claims 1 to 7 wherein said device is a sac-type device.

18. The regime of any previous claim wherein said heart is connectable to said first ventricular assist device by means of a respective first cannula and second cannula

interposed between said heart and said first connector and said heart and said second connector respectively.

19. The regime of any one of Claims 1 to 17 wherein said second ventricular assist device is connectable to said heart via said first cannula and said second cannula by means of said second ventricular assist device first connector and said second ventricular assist device second connector respectively.

20. A test procedure comprising the connection of a first ventricular assist device so as to assist a diseased heart for a first predetermined period of time; monitoring operation of said heart over said predetermined period of time so as to determine whether said heart can operate without the further assistance of said first ventricular assist device.

21. The test procedure of Claim 20 wherein said first ventricular assist device incorporates short term life features which render said first ventricular assist device suited to operation over a short life span.

22. The procedure of Claim 21 wherein said short term life features include use of plastics materials in one or more of the pump casing and pump rotor of said first ventricular assist device.

23. The procedure of Claim 21 wherein said short life span comprises a period of up to 6 months.

24. The procedure of Claim 21 wherein said short life span comprises a period of up to 3 months.

25. A method of treatment of the surface of a percutaneous lead for a ventricular assist device utilised in the regime of any one of Claims 1 to 15; said method comprising applying a surface texture or treatment to predetermined portions of the surface of the percutaneous lead thereby to allow incorporation of portions of said lead into tissue surrounding the percutaneous lead thereby to facilitate subsequent removal of said ventricular assist device and percutaneous lead.

26. A percutaneous lead for use with the regime of any one of Claims 1 to 19 incorporating a surface treatment applied to predetermined portions of the surface of said lead whereby tissue ingrowth is controlled over said portions.

27. The lead of Claim 26 wherein said surface treatment comprises application of a material to said surface.

28. The lead of Claim 27 wherein said material comprises velour.

29. The lead of Claim 26 wherein said treatment comprises application of a surface texture.

30. The lead of Claim 29 wherein said surface texture is tailored as to the degree to which ingrowth is promoted therein.

31. The lead of Claim 30 wherein tissue ingrowth is controlled by the extent to which texturing produces a labyrinth arrangement in said surface.

32. The lead of Claim 31 wherein tissue ingrowth is controlled by selection of depth and shape of textures in said surface.

33. A method of treatment of the surface of a percutaneous lead for a ventricular assist device; said method comprising applying a surface texture or treatment to predetermined portions of the surface of the percutaneous lead thereby to allow incorporation of portions of said lead into tissue surrounding the percutaneous lead thereby to facilitate subsequent removal of said ventricular assist device and percutaneous lead.

34. A percutaneous lead incorporating a surface treatment applied to predetermined portions of the surface of said lead whereby tissue ingrowth is controlled over said portions.

35. The lead of Claim 34 wherein said surface treatment comprises application of a material to said surface.

36. The lead of Claim 35 wherein said material comprises velour.

37. The lead of Claim 34 wherein said treatment comprises application of a surface texture.

38. The lead of Claim 37 wherein said surface texture is tailored as to the degree to which ingrowth is promoted therein.

39. The lead of Claim 38 wherein tissue ingrowth is controlled by the extent to which texturing produces a labyrinth arrangement in said surface.

40. The lead of Claim 38 wherein tissue ingrowth is controlled by selection of depth and shape of textures in said surface.

41. A method of mechanically assisting a heart to pump blood; said method comprising releasably, sealingly connecting via a first cannula and a second cannula a first ventricular assist device so as to at least assist said heart to pump said blood; during a first predetermined period of time, ascertaining if mechanical assistance continues to be required and, if so, substituting a second ventricular assist device

for said first ventricular assist device at the end of said first predetermined period of time.

42. In combination a first ventricular assist device adapted for short term use and a second ventricular assist device adapted for long term use.

43. A first cannula having a proximal end for connection to the aorta; a second cannula having a proximal end for connection to a ventricle; said first cannula having a distal end including connection means for releasably, sealingly connecting said distal end of said first cannula to either an inlet of a first ventricular assist device or an inlet of a second ventricular assist device; a second cannula having a distal end including connection means for releasably, sealingly connecting said distal end of said second cannula to either an outlet of said first ventricular assist device or an outlet of said second ventricular assist device; said second ventricular assist device adapted for substitution for said first ventricular assist device following a first predetermined period of operation of said first ventricular assist device.

44. An embolisation device adapted for insertion into either said first cannula or said second cannula of Claim 43; said embolisation device including a stem

having an end adapted to deliver a coagulating material to a sealing position within said proximal end of said first cannula or said second cannula.

45. A percutaneous lead for carriage of power to a ventricular assist device; said lead having a surface; said surface including regions which permit incorporation of the lead surface into the surrounding tissue and a region or regions which will not allow incorporation.

46. The lead of Claim 45 wherein the region allowing incorporation may extend the entire length of the percutaneous lead or none of it or it may extend over regions near the ventricular assist device sufficient only to help anchor the device in place or near to the site where the percutaneous lead exits the body and provide good closure to the wound so as to prevent or reduce the occurrence of infection.

47. The lead of Claim 45 or Claim 46 wherein, in addition, other areas on the surface of the percutaneous lead may have properties which prevent incorporation so as to facilitate easy removal of the lead at the end of the predetermined period of implantation of the first ventricular assist device.

Staged Implantation of Heart Assist Devices

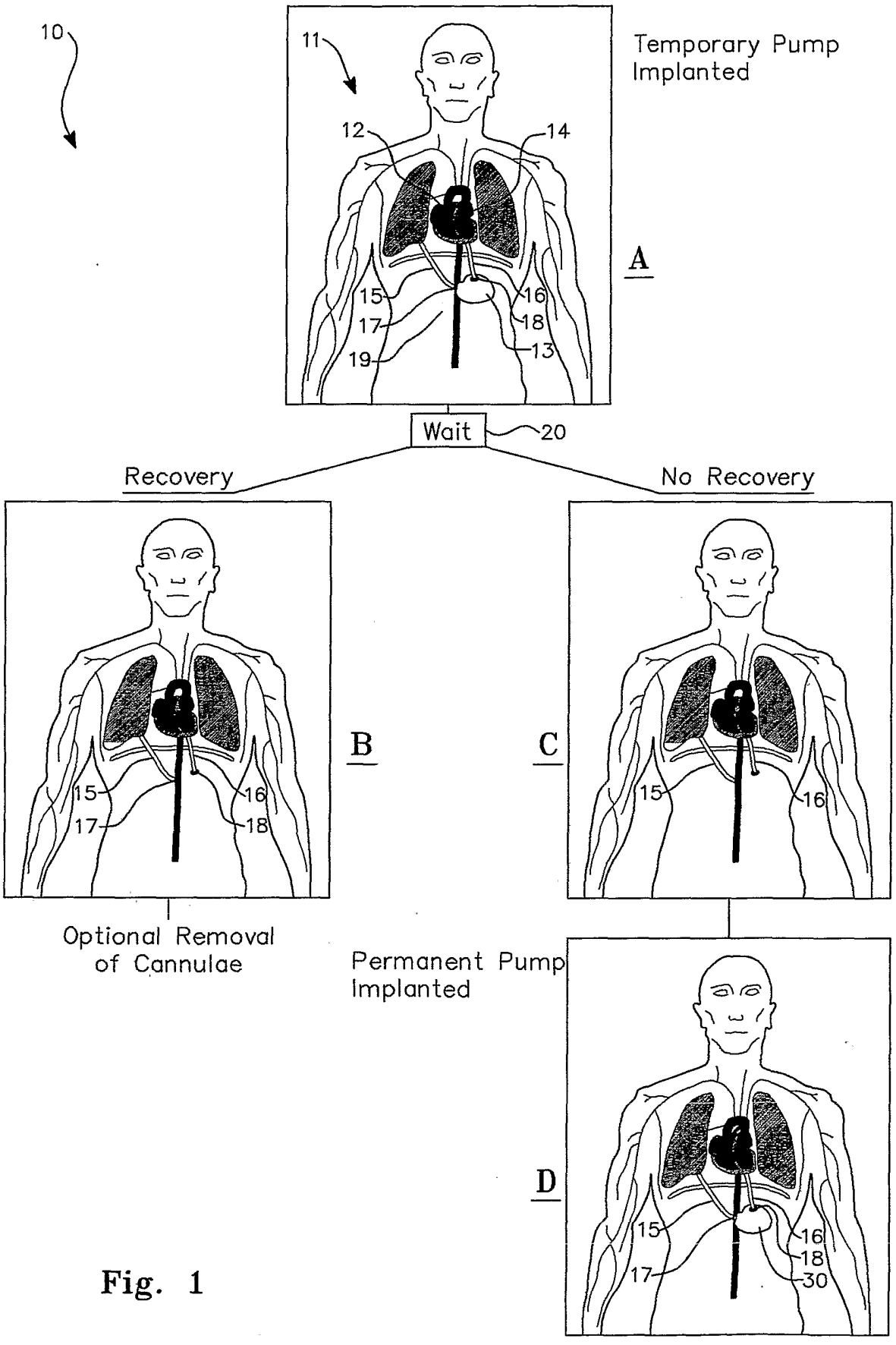

Fig. 1

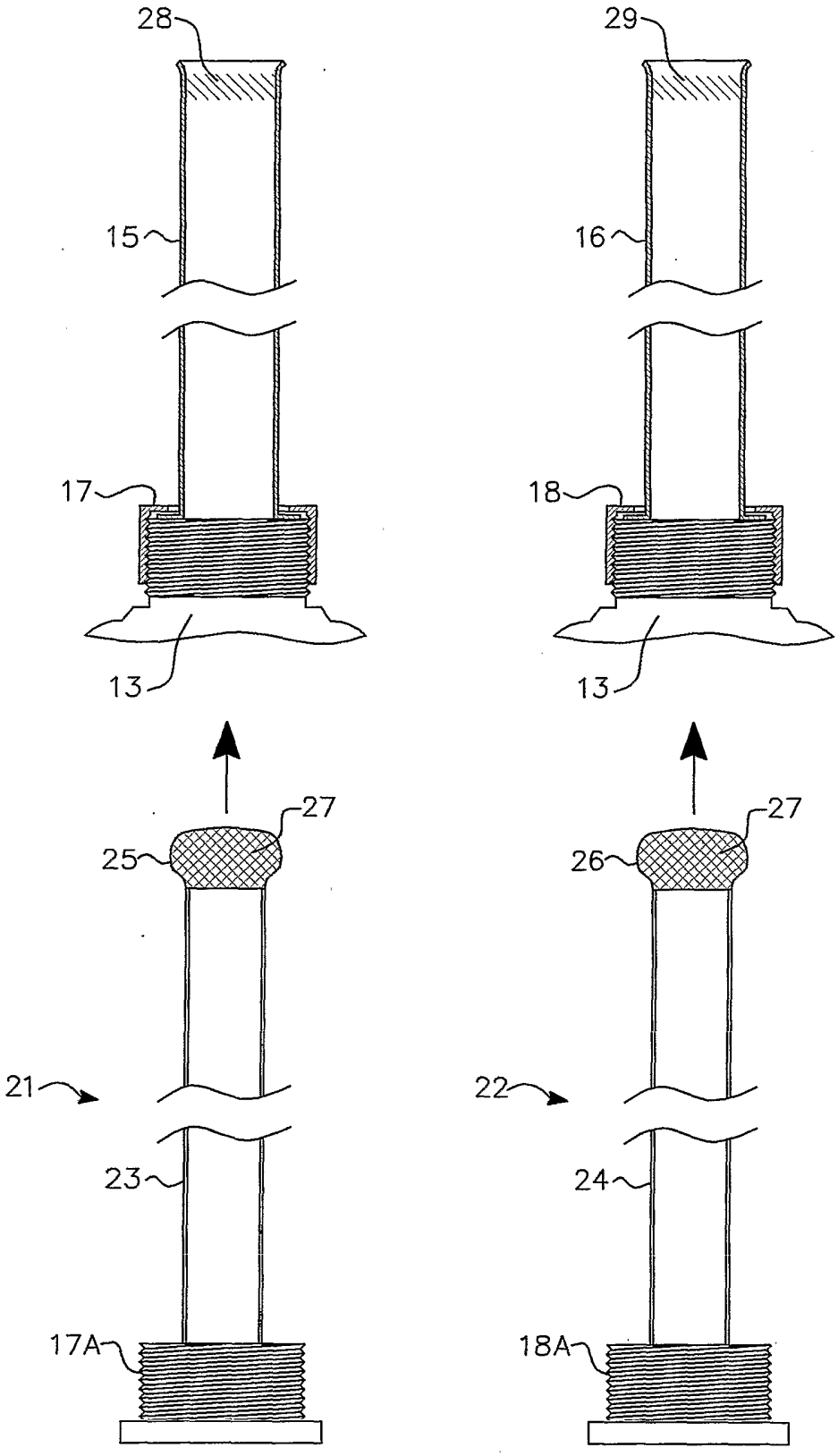

Fig. 2

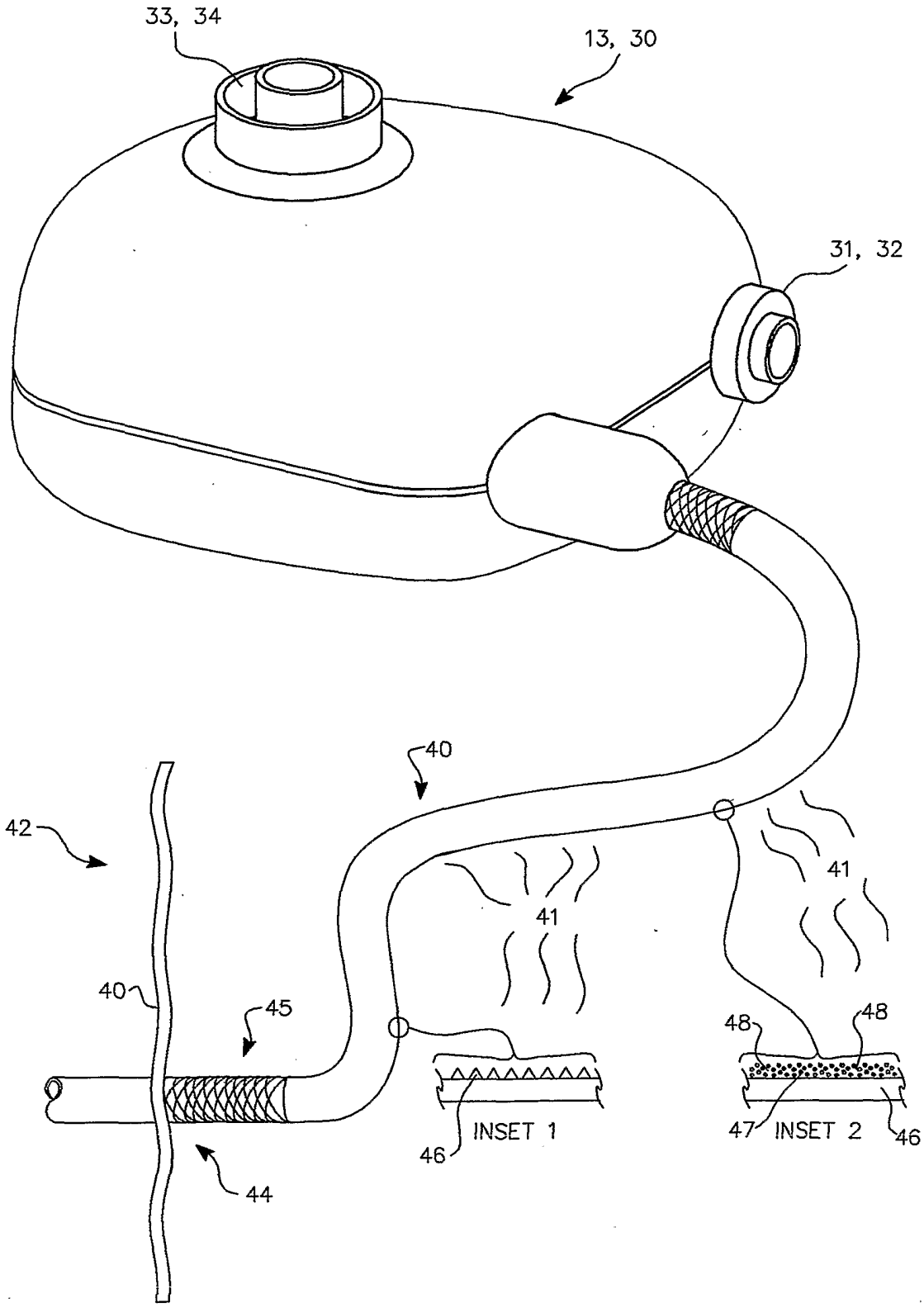

Fig. 3

INTERNATIONAL SEARCH REPORT

International application No.
PCT/AU02/00625

A. CLASSIFICATION OF SUBJECT MATTER

Int. Cl. [7]: A61M 1/12 31/00 39/20

According to International Patent Classification (IPC) or to both national classification and IPC

B. FIELDS SEARCHED

Minimum documentation searched (classification system followed by classification symbols)

Documentation searched other than minimum documentation to the extent that such documents are included in the fields searched

Electronic data base consulted during the international search (name of data base and, where practicable, search terms used)
DWPI and keywords

C. DOCUMENTS CONSIDERED TO BE RELEVANT

Category*	Citation of document, with indication, where appropriate, of the relevant passages	Relevant to claim No.
	US 4995857 A (ARNOLD) 26 February 1991	
X	Column 3 line 53 to column 4 line 22	20-24
Y		1-19, 41-43
	US 6228018 B1 (DOWNEY et al.) 8 May 2001	
X	Column 2 lines 26 to 31 Column 8 lines 64 to 67	20-24
Y		1-19, 41-43
	US 6227817 B1 (PADEN) 8 May 2001	
Y	Column 1 lines 5 to 9 Column 7 lines 42 to 44	1-14, 17-19

[X] Further documents are listed in the continuation of Box C [X] See patent family annex

* Special categories of cited documents:

"A" document defining the general state of the art which is not considered to be of particular relevance

"E" earlier application or patent but published on or after the international filing date

"L" document which may throw doubts on priority claim(s) or which is cited to establish the publication date of another citation or other special reason (as specified)

"O" document referring to an oral disclosure, use, exhibition or other means

"P" document published prior to the international filing date but later than the priority date claimed

"T" later document published after the international filing date or priority date and not in conflict with the application but cited to understand the principle or theory underlying the invention

"X" document of particular relevance; the claimed invention cannot be considered novel or cannot be considered to involve an inventive step when the document is taken alone

"Y" document of particular relevance; the claimed invention cannot be considered to involve an inventive step when the document is combined with one or more other such documents, such combination being obvious to a person skilled in the art

"&" document member of the same patent family

Date of the actual completion of the international search	Date of mailing of the international search report
16 August 2002	29 AUG 2002
Name and mailing address of the ISA/AU	Authorized officer
AUSTRALIAN PATENT OFFICE PO BOX 200, WODEN ACT 2606, AUSTRALIA E-mail address: pct@ipaustralia.gov.au Facsimile No. (02) 6285 3929	D. Melhuish **DAVID MELHUISH** Telephone No : (02) 6283 2426

INTERNATIONAL SEARCH REPORT

International application No.
PCT/AU02/00625

C (Continuation). DOCUMENTS CONSIDERED TO BE RELEVANT

Category*	Citation of document, with indication, where appropriate, of the relevant passages	Relevant to claim No.
Y	WO 00/38757 A1 (KRITON MEDICAL) 6 July 2000 Page 7 lines 1 to 3	1-12, 15-19
X	US 5879375 A (LARSON, Jr. et al.) 9 March 1999 Column 1 lines 59 to 67 Column 24 lines 55 to 63	20-24
X	US 5098370 A (RAHAT et al.) 24 March 1992 Column 6 lines 39 to 41 Column 9 lines 22 to 28	20, 23, 24
X	US 5941813 A (SIEVERS et al.) 24 August 1999 Column 3 lines 7 to 18	20-24
X Y	US 4573480 A (HIRSCHBERG) 4 March 1986 Column 1 lines 45 to 47 Column 2 lines 30 to 50	25,26,29-34, 37-40,45-47 27,28,35,36
X Y	US 5219361 A (VON RECUM et al.) 15 June 1993 Column 3 line 62 to column 4 line 18 Column 11 lines 4 to 11	25,26,29-34, 37-40,45-47 27,28,35,36
X Y	WO 00/57948 A1 (CARDIAC PACEMAKERS, INC.) 5 October 2000 Page 7 line 12 to page 8 line 4 Page 10 lines 11 to 13	25-27,33-35, 45-47 28,36
X,Y	US 5833664 A (SEARE, Jr.) 10 November 1998 Column 1 lines 6 to 13 Column 7 lines 6 to 25	25-28,33-36, 45-47
X	US 5755762 A (BUSH) 26 May 1998 Column 6 lines 13 to 22	26
X	WO 00/18469 A1 (BIOSURGICAL CORPORATION) 6 April 2000 Page 6 lines 30 to 32	44
X	US 5989215 A (DELMOTTE et al.) 23 November 1999 Column 4 lines 57 to 63	44
X	US 5626562 A (CASTRO) 6 May 1997 Column 3 lines 50 to 57 Column 4 lines 36 to 41	44

INTERNATIONAL SEARCH REPORT

International application No.
PCT/AU02/00625

Box I Observations where certain claims were found unsearchable (Continuation of item 2 of first sheet)

This international search report has not been established in respect of certain claims under Article 17(2)(a) for the following reasons:

1. ☐ Claims Nos :

because they relate to subject matter not required to be searched by this Authority, namely:

2. ☐ Claims Nos :

because they relate to parts of the international application that do not comply with the prescribed requirements to such an extent that no meaningful international search can be carried out, specifically:

3. ☐ Claims Nos :

because they are dependent claims and are not drafted in accordance with the second and third sentences of Rule 6.4(a)

Box II Observations where unity of invention is lacking (Continuation of item 3 of first sheet)

This International Searching Authority found multiple inventions in this international application, as follows:

See extra sheet.

1. ☒ As all required additional search fees were timely paid by the applicant, this international search report covers all searchable claims
2. ☐ As all searchable claims could be searched without effort justifying an additional fee, this Authority did not invite payment of any additional fee.
3. ☐ As only some of the required additional search fees were timely paid by the applicant, this international search report covers only those claims for which fees were paid, specifically claims Nos.:
4. ☐ No required additional search fees were timely paid by the applicant. Consequently, this international search report is restricted to the invention first mentioned in the claims; it is covered by claims Nos.:

Remark on Protest

☐ The additional search fees were accompanied by the applicant's protest.

☐ No protest accompanied the payment of additional search fees.

INTERNATIONAL SEARCH REPORT

International application No.
PCT/AU02/00625

Supplemental Box
(To be used when the space in any of Boxes I to VIII is not sufficient)

Continuation of Box No: II

The international application does not comply with the requirements of unity of invention because it does not relate to one invention or to a group of inventions so linked as to form a single general inventive concept. In coming to this conclusion the International Searching Authority has found that there are different inventions as follows:

1. Claims 1-19 and 41-43 directed to the combination of a first short term ventricular assist device and a second long term ventricular assist device. It is considered that this combination comprises a first "special technical feature".

2. Claims 20-24 directed to a test procedure involving monitoring an assisted heart for a period of time to see if the heart will be able to operate without the further assistance of the ventricular assist device. It is considered that the monitoring of the heart comprises a second "special technical feature".

3. Claims 25-40 and 45-47 directed to treating the surface of a percutaneous lead that can be used with a ventricular assist device. It is considered that the surface treatment comprises a third "special technical feature".

4. Claims 44 directed to an embolisation device with a stem adapted to deliver a coagulating material. It is considered that the stem comprises a fourth "special technical feature"

Since the abovementioned groups of claims do not share any of the technical features identified, a "technical relationship" between the inventions, as defined in PCT rule 13.2 does not exist. Accordingly the international application does not relate to one invention or to a single inventive concept, a priori.

INVITATION TO PAY ADDITIONAL FEES

International application No.
PCT/AU02/00625

The international application does not comply with the requirements of unity of invention because it does not relate to one invention or to a group of inventions so linked as to form a single general inventive concept. In coming to this conclusion the International Searching Authority has found that there are different inventions as follows:

1. Claims 1-19 and 41-43 directed to the combination of a first short term ventricular assist device and a second long term ventricular assist device. It is considered that this combination comprises a first "special technical feature".

2. Claims 20-24 directed to a test procedure involving monitoring an assisted heart for a period of time to see if the heart will be able to operate without the further assistance of the ventricular assist device. It is considered that the monitoring of the heart comprises a second "special technical feature".

3. Claims 25-40 and 45-47 directed to treating the surface of a percutaneous lead that can be used with a ventricular assist device. It is considered that the surface treatment comprises a third "special technical feature".

4. Claims 44 directed to an embolisation device with a stem adapted to deliver a coagulating material. It is considered that the stem comprises a fourth "special technical feature"

Since the abovementioned groups of claims do not share any of the technical features identified, a "technical relationship" between the inventions, as defined in PCT rule 13.2 does not exist. Accordingly the international application does not relate to one invention or to a single inventive concept, a priori.

INTERNATIONAL SEARCH REPORT

Information on patent family members

International application No.
PCT/AU02/00625

This Annex lists the known "A" publication level patent family members relating to the patent documents cited in the above-mentioned international search report. The Australian Patent Office is in no way liable for these particulars which are merely given for the purpose of information.

Patent Document Cited in Search Report		Patent Family Member					
US	4995857	NONE					
US	6228018	WO	200045872				
US	6227817	NONE					
WO	200038757	AU	200015241	EP	1140247	US	6158984
US	5879375	US	5290227	US	5676162	US	5676651
		US	5693091	US	5702430	US	5722429
		US	5722930	US	5758666	US	5843129
		AU	19714/95	CA	2183666	EP	748235
		WO	9523000				
US	5098370	DE	3902497	FR	2626475	GB	2214667
US	5941813	DE	19629614	JP	10127758		
US	4573480	DE	3305271				
US	5219361	CA	1323959	EP	359575	US	5011494
WO	200057948	AU	200040385	US	6304786	US	2002045926
US	5833664	WO	9815308	US	5971961		
US	5755762	NONE					
WO	200018469	US	5971539	EP	926530	JP	11194306
US	5989215	AU	45362/96	CA	2207992	EP	804257
		US	6074663	WO	9622115		
US	5626562	US	5865794				

END OF ANNEX