July 1, 1930. H. E. HOUSEMAN 1,769,580

CIRCULAR KNITTING MACHINE

Filed May 20, 1926 3 Sheets-Sheet 1

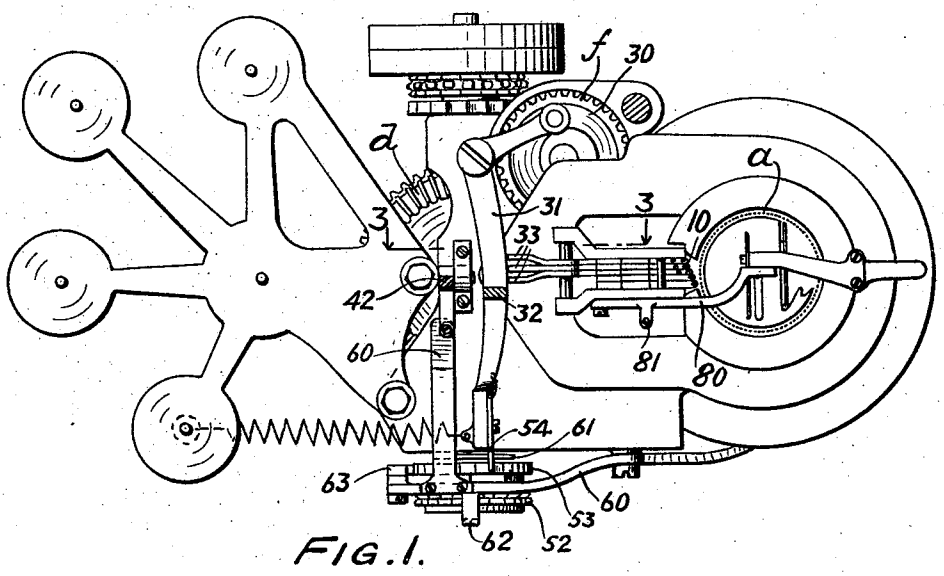

FIG. 1.

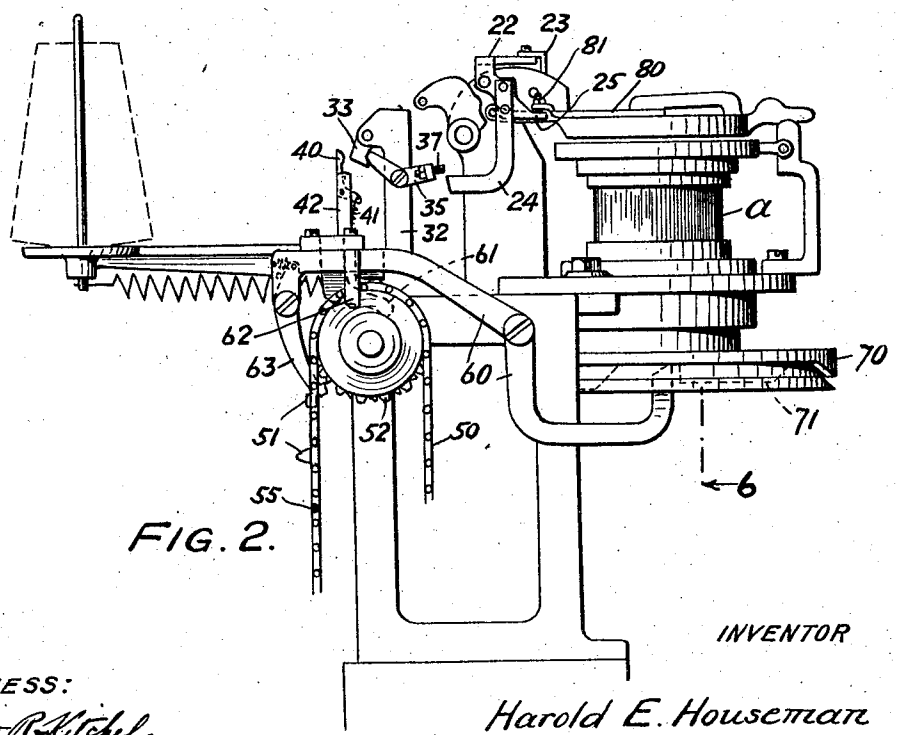

FIG. 2.

INVENTOR

WITNESS:

Robt R. Mitchel.

Harold E. Houseman

BY Bruce and Harding

ATTORNEYS.

July 1, 1930. H. E. HOUSEMAN 1,769,580

CIRCULAR KNITTING MACHINE

Filed May 20, 1926 3 Sheets-Sheet 2

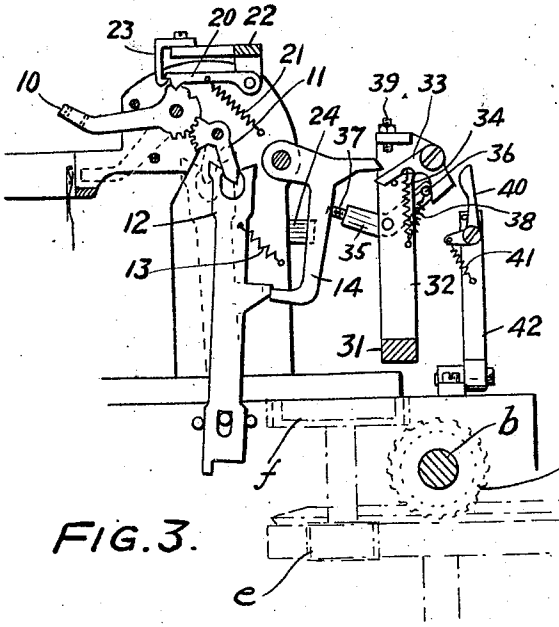

FIG. 3.

FIG. 4.

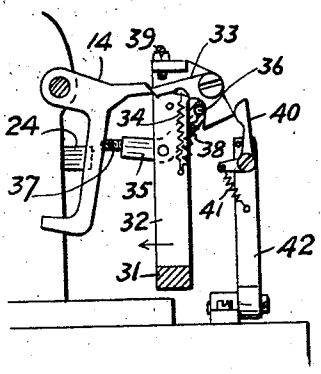

FIG. 5.

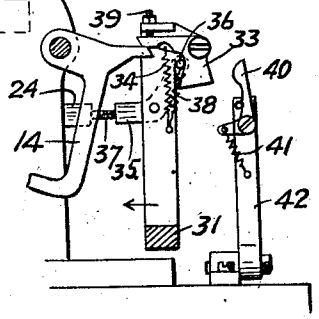

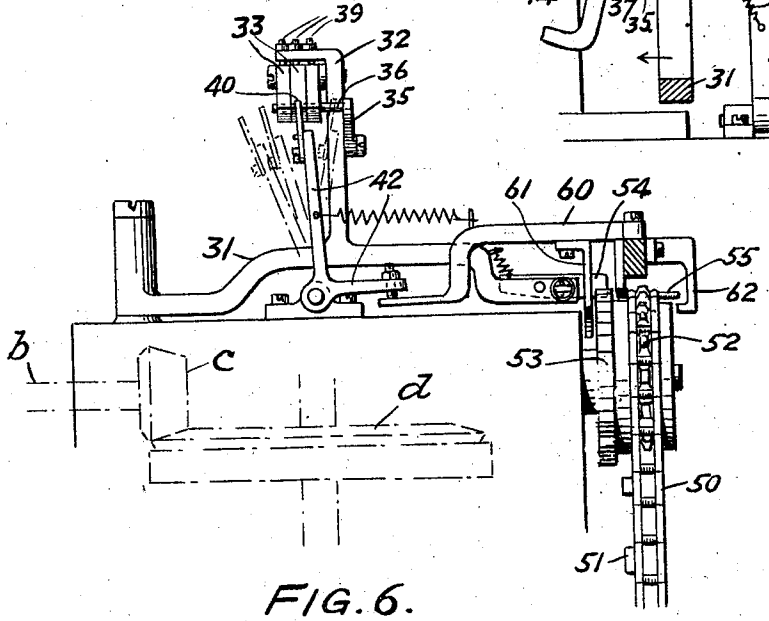

FIG. 6.

INVENTOR

WITNESS:

Robt. R. Ketchel.

Harold E. Houseman

BY

Burner and Harding

ATTORNEYS.

July 1, 1930. H. E. HOUSEMAN 1,769,580

CIRCULAR KNITTING MACHINE

Filed May 20, 1926 3 Sheets-Sheet 3

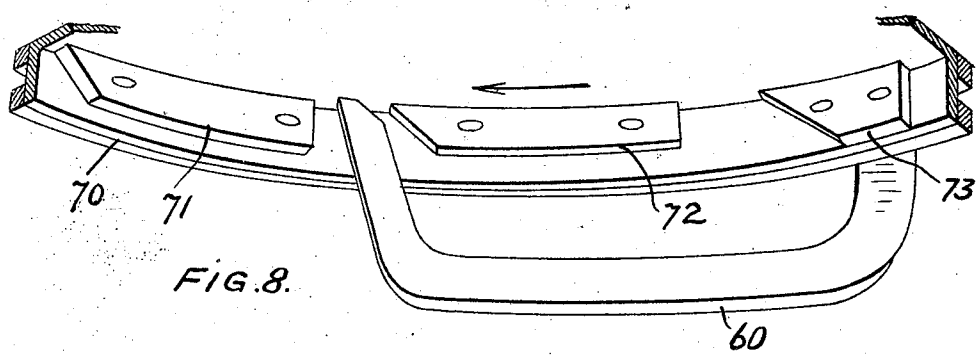

FIG. 8.

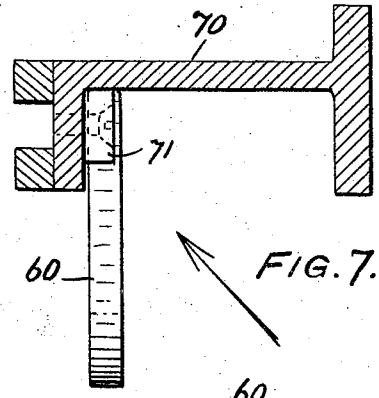

FIG. 7.

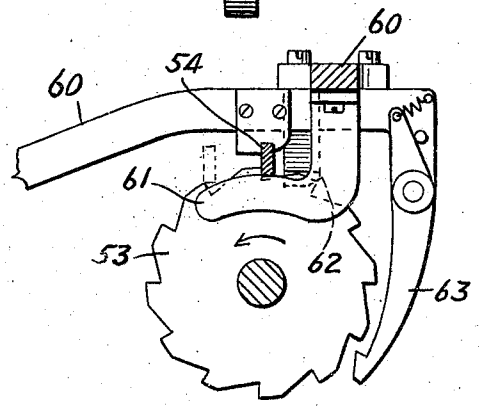

FIG. 9.

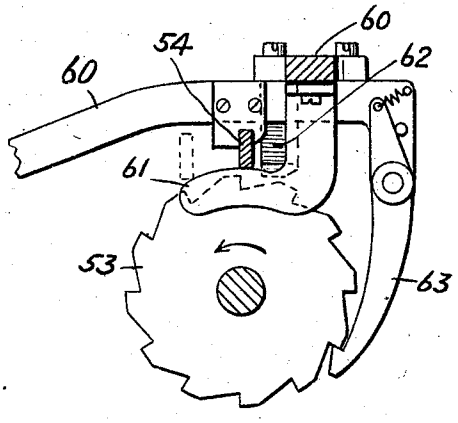

FIG. 10.

WITNESS:
Robt. R. Mitchell.

INVENTOR
Harold E. Houseman
BY
Bacon and Harding
ATTORNEYS.

Patented July 1, 1930 1,769,580

UNITED STATES PATENT OFFICE

HAROLD E. HOUSEMAN, OF WILMINGTON, DELAWARE, ASSIGNOR TO STANDARD-TRUMP BROTHERS MACHINE COMPANY, OF WILMINGTON, DELAWARE, A CORPORATION OF DELAWARE

CIRCULAR-KNITTING MACHINE

Application filed May 20, 1926. Serial No. 110,311.

The object of the invention is to provide an improved machine for effecting any desired changes of yarn in order to knit hosiery of multi-colored patterns, particularly striped hosiery.

To this end the invention comprises a number of features, all cooperating to enable the pattern of the fabric to be varied as desired, and to produce a perfect pattern in the fabric so that, automatically, the pattern will be continuous on the front of the stocking and top of the foot and will start afresh at the beginning of each new stocking.

The principal features of novelty are as follows:

Devices are provided to actuate the yarn fingers. These devices are operated independently of pattern mechanism, and pattern-controlled selecting means are movable into different positions to selectively render any of these devices effective. In the preferred construction these devices are reciprocated by the means that actuates the pattern mechanism. To effect a yarn change, the devices, in their movement in one direction, are engaged and positioned by the selector, and in their movement in the other direction, effect the movement of the selected yarn finger.

The machine is adapted, as is customary in circular hosiery machines, to rotate to form the leg and the circular part of the foot and to oscillate during the knitting of the heel and toe; the shift from rotation to oscillation and vice versa being effected automatically. In the present invention means are operated from the machine drive to move the pattern chain (or other form of pattern mechanism) to cause yarn changes to be made during rotation, to render the pattern chain inoperative to effect yarn changes during oscillation, and, when rotation is resumed, to again move the pattern chain to cause yarn changes. In the change to oscillation preparatory to knitting the heel, the chain is stopped, so that, when the knitting of the circular part of the foot is resumed, the pattern on the top of the stocking foot will continue from where it was stopped at the bottom of the front of the stocking leg, so as to produce an uninterrupted pattern along the front of the leg and top of the foot. In the change from rotation to oscillation preparatory to knitting the toe, the selecting means is so operated that it cannot be operated by the chain, but the chain continues to move until it is stopped by the cooperation of a device carried by the chain and a device on the machine; the chain being stopped at such point that, when the knitting of another stocking is commenced, the pattern of the fabric will start at the proper point. The pattern chain is so carried on the machine that it can be readily removed and another pattern chain substituted, and the new pattern chain, if not adjusted by hand, will be advanced by its drive and then automatically stopped by the described means and thereby be automatically correctly positioned for beginning a new stocking. This is a notable improvement over the customary method of changing a pattern, which involves the stopping of the machine for several hours while the pattern mechanism is adjusted to knit a new pattern. In this invention the change requires only a few seconds and may, if desired, be effected, during the knitting of the toe, without stopping the machine.

When a yarn carrier is moved into active position to guide the yarn to the needles, any yarn carrier that is in action is moved out of action, preferably by a spring, a very short time thereafter so as to allow the two threads to overlap for a very short circumferential distance. It is advisable that the length of the overlap be adjustable, as it is desirable to vary it with different patterns. This is usually effected by regrinding the yarn finger actuating cams, which is a slow and expensive procedure. In the present invention, the yarn carrier actuating mechanism comprises a part which is instantly adjustable by hand to vary and predetermine the time interval between the insertion of one yarn carrier and the withdrawal of another.

The yarn carriers are held in active position by means of retainers. When a yarn finger is moved into operative position all the retainers are released so as to allow the yarn finger that has been in operative position to be withdrawn by its spring.

The machine comprises other novel features of construction, operation, function and advantage which are developed in the particular description of the drawings, which illustrate a machine embodying my invention in a practically operative and commercially successful form.

Fig. 1 is a plan view of the parts of a circular knitting machine embodying my invention.

Fig. 2 is a side elevation of the same looking toward one side of the machine.

Fig. 3 is a side elevation, partly in section, of the yarn changing mechanism, looking toward the other side of the machine.

Figs. 4 and 5 are similar views of a portion of the mechanism shown in Fig. 3, with the parts in different positions.

Fig. 6 is a rear elevation of the devices for actuating the yarn fingers and yarn finger retainers, the selector, the pattern chain, and associated mechanism.

Fig. 7 is an enlarged cross-section through the cam disc of the machine on line 6 Fig. 2.

Fig. 8 is a perspective view of the cams for primarily controlling the operation of the pattern chain, looking in the direction of the arrow, Fig. 7.

Figs. 9 and 10 are detail views of the mechanism for immediately controlling the operation of the pattern chain.

a is the needle cylinder of a circular knitting machine. This cylinder may be driven from the main shaft so as to have imparted to it a movement of continuous rotation or a movement of oscillation, as is well known in the art. Any known mechanism for so operating the cylinder and for shifting, and for controlling the shift, from rotation to oscillation and vice versa may be employed, as, for example, the mechanism shown in the patent issued to me December 24, 1918, No. 1,288,594.

In the present case, I have shown a main driving shaft *b* which, through a bevel pinion *c*, drives a bevel gear *d*. The latter carries a spur gear which drives a pinion *e* on the shaft of a gear wheel *f*. From the latter the needle cylinder is driven by means not shown. See Figs. 3 and 6.

The machine is equipped with any desired number of yarn fingers 10. Five are shown, three being used for striping and operated in accordance with my invention. Each yarn finger is pivotally supported on a suitable part of the machine frame and is normally held out of operative position, as shown in full lines in Fig. 3, by a spring 13. In the specific construction shown, each finger 10 gears with a pivoted lever 11, whose free end extends between the forks of a rock lever 12, which is normally held, by the spring 13, in position to hold finger 10 out of action. Each lever 12 is positively operable, by a corresponding lever 14 pivoted on the frame, to swing yarn finger 10 down into action.

Each yarn finger 10 is provided with two notches, one or the other of which (dependent on whether the finger is moved up out of action or down into action) is engaged by a retainer lever 20 suitably pivoted on the frame and maintained in holding position by a spring 21. Pivoted on the same axis as lever 20 is a frame 22 having a hooked end 23 (extending under the free ends of levers 20) and a depending arm 24, the end of which is shown in Figs. 3, 4 and 5 and the whole of which is shown in Fig. 2. The main function of the retaining levers 20 is to hold in active position the corresponding yarn finger 10 after it is depressed by the lever 14 acting through levers 12 and 11.

Pivotally mounted on the machine frame is a laterally extending bell crank lever 31 (see Figs. 1 and 6), one arm of which has a pin which rides in a cam groove 30 in gear wheel *f*, which imparts to lever 31 a constant reciprocatory movement. The other arm of the reciprocating lever 31 carries an upright arm 32 having a laterally extending end on which are pivoted a series of devices 33 each shaped like a bell crank (see Figs. 3, 4 and 5). These devices 33 operate the respective levers 14 but are normally held by springs 34, in such position, as shown in Fig. 3, that, in their forward swinging movement, they do not engage levers 14. If, however, any one of the devices 33, in its movement of recession, is tilted to the position shown in Fig. 4, then in its next forward movement, it actuates the corresponding lever 14, as shown in Fig. 5, thereby moving down into action the corresponding yarn finger 10. During such forward movement of device 33, its forward bevelled end slides over and above the rear bevelled end of lever 14, the upward tilting movement of device 33 being limited by a stop 39.

The arm 32 of reciprocating lever 31 also carries a pivoted bell crank lever 35, which at one end carries a cross-bar 36 and at its other end carries an adjustable screw 37. Lever 35 is normally held in inoperative position by a spring 38. When, however, any of the devices 33 is tilted into operative position and is carried forward by arm 32 to actuate the mechanism for moving into action a corresponding yarn finger 10, such device swings lever 35 into such position that, in the continued forward movement of arm 32, lever 35 strikes the end of arm 24, tilting frame 22 and lifting all the retaining levers 20, thus allowing any yarn carrier that has been previously down in operative position to be swung up into inoperative position by its corresponding spring 13.

On the next receding movement of arm 32, lever 35 first recedes from arm 24, allowing springs 21 to move the retaining levers 20 again into engagement with the respective

yarn fingers 10, thereby holding in operative position the yarn carrier that has been moved into action.

The described parts are so positioned that the tilted device 33 effects a movement into operative position of the corresponding yarn finger 10 appreciably before the lever 35 effects the lifting of the retaining levers 20, so that, for an appreciable time (say one two hundredths of a second and while the needle cylinder is revolving throughout an arc subtending four needles), two yarn fingers are simultaneously in action. This effects an overlap of yarn in the fabric being knit. The movement of one yarn finger into operation just before the withdrawal of another yarn finger is common in the art; but in addition to this mode of operation, the above described construction affords a ready means of predetermining exactly the length of the overlap, such means being the screw 37, by whose adjustment the exact movement of withdrawal of the retaining levers 20 after the movement into operation of a yarn finger can be accurately controlled.

The tilting of the devices 33 is effected by means of a selector 40 shown in Figs. 2, 3, 4, 5 and 6. Selector 40 is movable into a number of different positions, as shown in Fig. 6. Except when a yarn change is to be made, the selector is in an inoperative position (one of the broken line positions). During rotary knitting, selector 40 normally occupies the broken line position at the right, Fig. 6. During the oscillation of the needle cylinder while knitting a plain heel or toe, it occupies one of the broken line positions at the left. When, however, during rotary knitting, it is desired to effect a yarn change, the selector is shifted to a position behind one of the tiltable devices 33. In Fig. 6 it is shown as behind the middle one of the devices 33. In the receding movement of arm 32, after selector 40 has been so positioned, the middle of the devices 33 is tilted, as shown in Fig. 4, so as to position it to subsequently effect the movement into operative position of the corresponding yarn carrier 10 and the lifting of all the retaining levers 20, as above described. Selector 40 is under tension of a spring 41 to allow device 33 to slightly tilt the selector backward in the completion of the receding movement of arm 32 to allow the front bevel of device 33 to override and, in the beginning of its succeeding advance movement, just overlap the rear bevel of the corresponding lever 14, as shown in Fig. 4, and thus set the device 33 in operative position. During this advance movement of arm 32, the selector is shifted to the right, Fig. 6, out of alignment with the devices 33, so that on the next receding movement of arm 32, the just actuated device 33 will return to the inoperative position shown in Fig. 3.

A distinctively advantageous feature of my new machine is that the same element (lever 31) that reciprocates the devices 33 for controlling yarn changes also effects (indirectly) the shifting of the selector 40 into position to effect any desired yarn change. The selector is more nearly directly actuated by a pattern chain 50 (see particularly Fig. 6) carrying lugs 51 of three different heights. These three lugs are adapted to underride a lever 60 and lift it so as to tilt into three different positions a bell crank lever 42 carrying the selector 40 and shift it from the broken line position shown at the right in Fig. 6 to a position back of the first, second or third of the devices 33, dependent on whether the operating pattern chain lug is a low lug, a medium lug, or a high lug. The pattern chain is operated by a sprocket wheel 52 carrying a ratchet wheel 53, which is engaged by a pawl 54 (see Figs. 6, 9 and 10) on the reciprocating lever 31. Thereby, as above stated, lever 31 carries the devices 33 that effect the selective operation of the several yarn fingers 10 and also imparts a step-by-step movement to pattern mechanism controlling the selector 40 that selectively actuates devices 33.

In the shift from rotation to oscillation, preparatory to knitting the heel, it is necessary to arrest the movement of the pattern chain so that, on the return to rotation and the resumption of circular web knitting, the pattern in the front of the web will be continued where it left off at the conclusion of the previous period of rotation. The movement of the pattern chain is arrested, in a very simple manner, by means of a pawl guard 61, which is lifted from a position below that shown in Fig. 9 (where it does not affect the pawl 54) to the position shown in Fig. 10, in which position it lifts the pawl 54 out of action. Pawl guard 61 is lifted by the lifting of lever 60 above the position to which it is lifted by the highest lug on the pattern chain. When lever 60 is so lifted, it swings the selector-carrying lever 42 into the extreme left-hand broken line position shown in Fig. 6, which is one of the inoperative positions of the selector.

This high lifting of lever 60 is effected by means of a cam 71 carried by a pattern disc 70. See Figs. 7 and 8. This pattern disc may be intermittently operated by any suitable means, as, for example, that shown in the patent issued to me June 4, 1921, No. 1,364,112. The term "pattern disc" is intended to include any device carrying the cam 71 (and the cams 72 and 73 hereinafter described) and which is operable in proper sequence relative to the means for changing from rotation to oscillation, and vice versa. Cam 71, it will be understood, operates lever 60 at the beginning of the shift from rotation to oscillation preparatory to knitting the heel and

releases lever 60 at the conclusion of such oscillating period.

In timed relation to the shift from rotation to oscillation preparatory to knitting the toe, it is necessary to again arrest the movement of the pattern chain; and when it is desired to begin the knitting of the pattern after the return shift from oscillation to rotation and after knitting of a new stocking is started, it is necessary to restart the pattern chain. It is obviously desirable, however, to start the pattern at the beginning and therefore the pattern chain should not be arrested until it is brought to the definite position that it must occupy in order to start the pattern at the beginning. To effect this operation of stopping and restarting in timed relation to the said shifts, it is necessary to restart the pattern chain at a definite course of knitting; but the time of arrest of the pattern chain preceding such restarting will vary with the position of the pattern chain after the yarn fingers used for striping are moved out of action preparatory to knitting the toe; and such arrest may occur during rotation immediately preparatory to the shift to oscillation or during such oscillation, while the restart of the pattern chain will occur after rotation is resumed. This will be clear from the following explanation.

Preparatory to knitting the toe, it is customary to knit several plain round courses. In the present machine, therefore, it is arranged that all the yarn carriers used for striping shall be moved out of action preparatory to knitting these plain round courses; and it is arranged that the pattern chain shall thereafter continue to advance until it is brought to the definite position that it must occupy in order to start the pattern at the beginning and shall not be arrested until it is brought to that position. This movement of arrest may occur while the machine is knitting plain round courses or after the subsequent shift from rotation to oscillation and while it is knitting the toe—dependent on the length of chain that must be advanced until the chain is brought to such definite position. After the toe is completed and the machine is reshifted from oscillation to rotation, it is customary to knit several looper rounds and, after transferring, to knit several rounds of plain knitting and then restart the pattern. In the present machine, therefore, it is arranged, after the desired number of rounds of plain knitting, to restart the chain and thereby restart the knitting of the patterned part of the stocking.

To effect the above described operation, I provide devices on the pattern chain and lever 60 which cooperate to stop the chain at the proper point, and to thereafter restart the chain, as will now be described.

Preparatory to knitting the plain round courses preceding the toe, a cam 72 on pattern disc 70 engages lever 60 and swings it into the position shown in Fig. 9, whereat lever 60 is shown lifted high enough to allow the lugs on the pattern chain to travel under the lever 60 but not so high as to lift guard 61 high enough to prevent the continued ratcheting of the pattern wheel by the pawl 54. (In this position of lever 60, lever 42 is swung into the broken line position next to the extreme broken line position at the left in Fig. 6.) In this position of lever 60, an arrester cam 62 on lever 60 is brought into such position that a shifter or set-up pin 55 (Fig. 6) on the pattern chain will (at the point at which it is desired to stop the pattern chain) underride arm 62 and lift lever 60 into the position shown in Fig. 10, at which position, as hereinbefore explained, and as Fig. 10 clearly shows, guard 61 will lift pawl 54 out of operative position. It will remain in this position even after cam 72 rides beyond lever 60. After the knitting of the toe is completed and after the shift from oscillation to rotation and after the previously described round courses are knit, an extra high cam 73 rides under lever 60 and lifts it to a position higher than any hereinbefore described and sufficiently high to cause a second pawl 63 (carried by lever 60) to engage the ratchet 53 and advance the pattern chain one step, the pin 55 then riding beyond arm 62. Immediately thereafter cam 73 rides beyond lever 60, permitting lever 60 to return to its normal position, in which position pawl guard 61 drops down into operative position, allowing the pawl 54 to resume the step-by-step operation of the pattern chain.

A clamp-and-cutter actuating lever 80 (see Figs. 1 and 2) is pivoted on the machine frame. Lever 80 is operated, synchronously with the yarn changing mechanism, by means of an arm 25 (on frame 22) underriding an adjusting screw 81 carried by lever 80. The clamp and cutter mechanism may be the same as that set forth in an application filed by me June 19, 1925, Serial No. 38,162.

It will be noted that the described pattern mechanism comprises the pattern chain 50 and the cams on the disc 70; and that the cam-carrying disc acts as a primary pattern mechanism and that the chain acts as a secondary pattern mechanism. Obviously these two pattern mechanisms need not be respectively a "disc" and a "chain", as equivalent pattern devices are known in the art.

One notable advantage of a machine embodying my invention is that a change of pattern may be made very quickly. In the ordinary knitting machine, a change of pattern involves the stopping of the machine for several hours while the pattern mechanism is being adjusted to knit a new pattern. In my machine, it is only necessary to slip off one chain and substitute another chain the

lugs of which were arranged to dictate the knitting of a new pattern while the machine was in operation. This change occupies but a few seconds and, indeed, may be effected while the machine is knitting the toe. Moreover, the chain need not be accurately positioned, because it will automatically properly position itself by the engagement of the described cooperating devices 55 and 62 on the pattern chain and lever 60 respectively.

The pattern mechanism per se herein described constitutes the subject-matter of a divisional application filed June 22, 1928, Serial No. 287406.

Having now fully described my invention, what I claim and desire to protect by Letters Patent is:

1. In a circular knitting machine, the combination with a rotatable needle cylinder, of a set of non-rotatable independently movable yarn fingers, a set of independently operable devices, one for each yarn finger, adapted to effect the movement of the respective yarn fingers into operative position, operating means for said devices, selecting means, and pattern mechanism adapted to move the selecting means to so position the operating means that the latter will be effective to so operate said sets of devices, to selectively actuate said yarn fingers.

2. In a circular knitting machine, the combination with a rotatable needle cylinder, of a set of non-rotatable independently movable yarn fingers, a set of independently operable devices, one for each yarn finger, adapted to effect the movement of the respective yarn fingers into operative position, selecting means adapted to be shifted into position to cause any of said devices to be selectively operated, means, operable in the actuation of the selected device and yarn finger, to effect a withdrawal from yarn feeding position of any other yarn finger that is in yarn feeding position, and pattern mechanism adapted to move the selecting means into any predetermined operative position.

3. In a circular knitting machine, the combination with a rotatable needle cylinder, of a set of non-rotatable independently movable yarn fingers, a set of independently operable devices, one for each yarn finger, adapted to effect the movement of the respective yarn fingers into operative position, selecting means adapted to be shifted into position to cause any of said devices to be selectively operated, means, operable in the actuation of the selected device and yarn finger, to effect a withdrawal from yarn feeding position of any other yarn finger that is in yarn feeding position after the first yarn finger has moved into operative position so as to produce an overlap of yarn in the finished fabric, and pattern mechanism adapted to move the selecting means into any predetermined operative position, said yarn finger withdrawal means comprising an adjustable device to vary the lag of the operation of said yarn finger withdrawal means behind the movement of the first yarn finger into operative position.

4. In a circular knitting machine, the combination with a rotatable needle cylinder, of a set of non-rotatable independently movable yarn fingers, a set of independently operable devices, one for each yarn finger, adapted to effect the movement of the respective yarn fingers into operative position, selecting means adapted to be shifted into position to cause any of said devices to be selectively operated, pattern mechanism adapted to move the selecting means into any predetermined position, driving means and mechanism operable therefrom to rotate and oscillate the needle cylinder, means operable from the driving means to impart a step-by-step movement to said pattern mechanism, and means operable from the driving means to arrest the movement of the pattern mechanism in a change from rotation to oscillation.

5. In a circular knitting machine, the combination with a rotatable needle cylinder, of a plurality of yarn fingers, springs tending to move the yarn fingers in one direction, retainers for restraining the movement of the yarn fingers by their springs, actuators for positively and independently moving the yarn fingers in the opposite direction, mechanism for rendering all the retainers inoperative to restrain the movement of the yarn fingers, devices for operating said actuators, said devices, actuators and mechanims being normally inoperative, and a pattern-controlled selector for rendering any one of said devices operative and said actuators and mechanism successively operative whereby one yarn finger is moved positively in one direction and another yarn finger moved spring-actuated in the opposite direction.

6. In a circular knitting machine, the combination with a rotatable needle cylinder, of a set of yarn fingers independently movable into and out of action, springs tending to move the respective yarn fingers out of action, retainers adapted to hold the respective yarn fingers in action after they are moved into action, mechanism adapted to be operated to first positively move a yarn finger into action and thereafter to hold said yarn finger in action and withdraw all the retainers from operative position, thereby allowing any other yarn finger that may have been in action to move out of action, said mechanism being also adapted to subsequently release all said retainers to allow the yarn finger that has been moved into action to be held in action by its retainer and then to release the last named yarn finger, and selecting means adapted to cause said mechanism to selectively move into action, as above spec-

ified, any predetermined yarn carrier of the set.

7. In a circular knitting machine, the combination with a rotatable needle cylinder, of a set of non-rotatable independently movable yarn fingers, a set of independently operable non-rotatable yarn finger actuators, one for each yarn finger, adapted to move the respective yarn fingers into yarn-feeding position, a set of independently operable devices, one for each yarn finger actuator, adapted to actuate the respective yarn finger actuators, means to operate said devices, selecting means adapted to be shifted into position to render any of said devices effective, in its operation by its operating means, to selectively actuate its respective yarn finger actuator, and pattern mechanism adapted to move the selecting means into any predetermined position.

8. In a circular knitting machine, the combination with a rotatable needle cylinder, of a set of non-rotatable independently movable yarn fingers, a set of independently operable non-rotatable yarn finger actuators, one for each yarn finger, adapted to move the respective yarn fingers into yarn-feeding position, a set of independently operable devices, one for each yarn finger actuator, adapted to actuate the respective yarn finger actuators, selecting means adapted to be shifted into position to cause any of said devices to be selectively operated, means, operable in the actuation of the selected device and yarn finger actuator, to effect a withdrawal from yarn-feeding position of any yarn finger that is in yarn-feeding position, and pattern mechanism adapted to move the selecting means into any predetermined operative position.

9. In a circular knitting machine, the combination with a rotatable needle cylinder, of a set of non-rotatable independently movable yarn fingers, a set of independently operable devices adapted to move the respective fingers into and temporarily hold them in yarn-feeding position, finger retainers adapted to hold the respective yarn fingers in yarn-feeding position, selecting means adapted to be shifted into position to cause the finger-moving devices to be selectively and independently operated, means operable in the actuation of a finger-actuating device to withdraw from operative position any retainer that is holding its corresponding yarn finger in yarn feeding position the retainer corresponding to the finger that is moved into yarn-feeding position by the corresponding finger-moving device, and pattern mechanism adapted to move the selecting means into any of its operative positions.

10. In a circular knitting machine, the combination with a rotatable needle cylinder, of a set of non-rotatable independently movable yarn fingers, a set of independently operable devices adapted to move the respective fingers into and temporarily hold them in yarn-feeding position, retainers adapted to hold the respective yarn fingers in yarn-feeding position, selecting means adapted to be moved into position to selectively operate the finger-actuating devices, means, operable in the actuation of a finger-actuating device, to withdraw from operative position all the finger retainers and to release them before the selectively operated finger-moving and holding device releases its yarn finger, and pattern mechanism adapted to move the selecting means into any of its actuating positions.

11. In a circular knitting machine, the combination with a rotatable needle cylinder, of a set of non-rotatable independently movable yarn fingers, a set of independently operable devices adapted to move the respective fingers into and temporarily hold them in yarn-feeding position, finger retainers adapted to hold the respective yarn fingers in yarn-feeding position, means to withdraw from operative position any retainer that is holding its corresponding yarn finger in yarn-feeding position, means, operable by any of said finger-moving and holding devices, adapted to so actuate said retainer-withdrawing means and to release said retainer-withdrawing means before the actuated finger-moving and holding device releases its respective yarn finger, selecting means adapted to be moved into position to selectively operate the finger-moving and holding devices, and pattern mechanism adapted to shift the selecting means into any of its operative positions.

12. In a circular knitting machine, the combination with a rotatable needle cylinder, of a set of non-rotatable independently movable yarn fingers, a set of independently operable members adapted to move the respective yarn fingers into yarn-feeding position, springs tending to withdraw the yarn fingers from yarn-feeding position, a set of independently operable devices adapted to actuate said members respectively, means to operate said devices, selecting means adapted to be moved into position to render any of said devices effective, in its operation by its operating means to selectively actuate any of said members, and pattern mechanism adapted to move the selecting means into any predetermined operative position.

13. In a circular knitting machine, the combination with a rotatable needle cylinder, of a set of non-rotatable independently movable yarn fingers, a set of non-rotatable independently operable members adapted to move the respective yarn fingers into yarn-feeding position, springs tending to withdraw the yarn fingers from yarn-feeding position, a set of independently operable devices adapted to move the respective finger-moving members into position to move and

temporarily hold the respective yarn fingers in yarn-feeding position, retainers adapted to retain the respective yarn fingers in yarn-feeding position after they are released by their respective moving members, selecting means adapted to be shifted into position to selectively actuate any of said devices, means operable by any of said devices to withdraw the retainer from retaining position to allow any finger in yarn-feeding position to be withdrawn from such position, said retainers being freed from said withdrawal means to allow one of them to move into position to retain in yarn-feeding position the finger which is moved into yarn-feeding position by the device and member that are operated by the selecting means, and pattern mechanism adapted to move the selecting means into any predetermined operative position.

14. In a circular knitting machine, the combination with a rotatable needle cylinder, of a set of non-rotatable independently movable yarn fingers, a set of independently operable members adapted to move the respective fingers into yarn-feeding position, springs tending to withdraw the yarn fingers from yarn-feeding position, retainers adapted to hold the yarn fingers in yarn-feeding position against the action of their springs, a set of independently operable devices for actuating the respective finger-moving members, a contrivance and connections therefrom to the retainers for moving the latter out of said retaining position, selecting means adapted to effect the successive operation of one of said devices and said contrivance to successively effect the movement of one of the fingers into yarn-feeding position and allow another finger that has been in yarn-feeding position to be moved out of action by its spring, and pattern mechanism adapted to move the selecting means into different predetermined operative positions.

15. In a circular knitting machine, the combination with a rotatable needle cylinder, of a set of yarn fingers, yarn changing mechanism, pattern mechanism, a contrivance adapted to operate the pattern mechanism, and means to operate the yarn changing mechanism to effect yarn changes, said means being operable in part by said contrivance independently of the pattern mechanism and in part by the pattern mechanism.

16. In a circular knitting machine, the combination with a rotatable needle cylinder, yarn fingers, operating devices therefor, selecting means movable into different positions and thereby so controlling the operation of said devices as to cause them to operate the yarn carriers to effect predetermined change of yarn, a yarn cutter, and mechanism operable by said devices to operate the cutter.

17. In a circular knitting machine, the combination with a rotatable needle cylinder, yarn fingers, operating devices therefor, selecting means movable into different positions and thereby so controlling the operation of said devices as to cause them to operate the yarn carriers to effect predetermined changes of yarn, a yarn clamp and cutter, and mechanism operable by said devices to operate the clamp and cutter.

18. In a circular knitting machine, the combination of a needle cylinder, a set of not less than three independently movable yarn fingers, a set of independently operable devices, one for each yarn finger, adapted to effect the movement of the respective yarn fingers into operative position, and means to subsequently effect a withdrawal from yarn feeding position of any one of the yarn fingers that is in yarn feeding position so as to produce an overlap of yarn in the fabric, said yarn finger withdrawal means comprising a chain of elements adapted to allow withdrawal of all the yarn guides, one element operating another and operating synchronously with said devices, one of said elements comprising an adjustable device whereby the time of contact between two elements of the chain may be advanced or retarded, thereby advancing or retarding the time of the movement of withdrawal of any one of the yarn fingers that is in operative position and thereby, by a single adjustment, increasing or decreasing the overlap of yarn produced by the specified successive insertion and withdrawal of any two of the yarn fingers.

In testimony of which invention I have hereunto set my hand, at Philadelphia, Pennsylvania, on this 29th day of April, 1926.

HAROLD E. HOUSEMAN.