DOOR LATCH ASSEMBLY

Filed Oct. 16, 1967

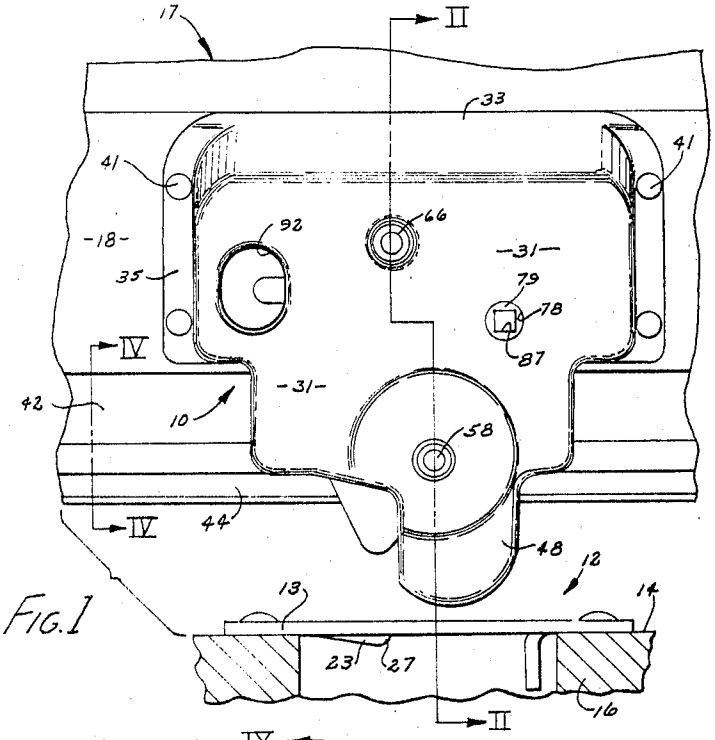

FIG. 1

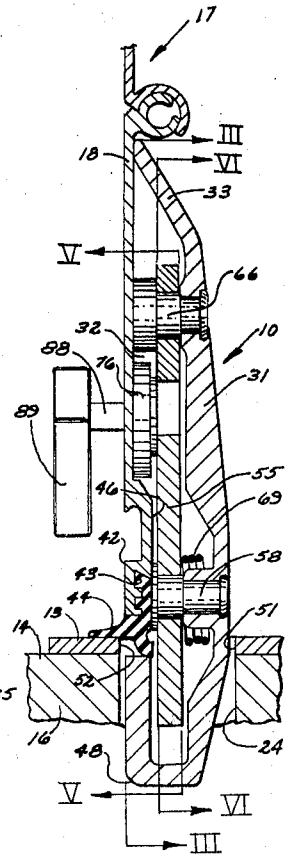

FIG. 2

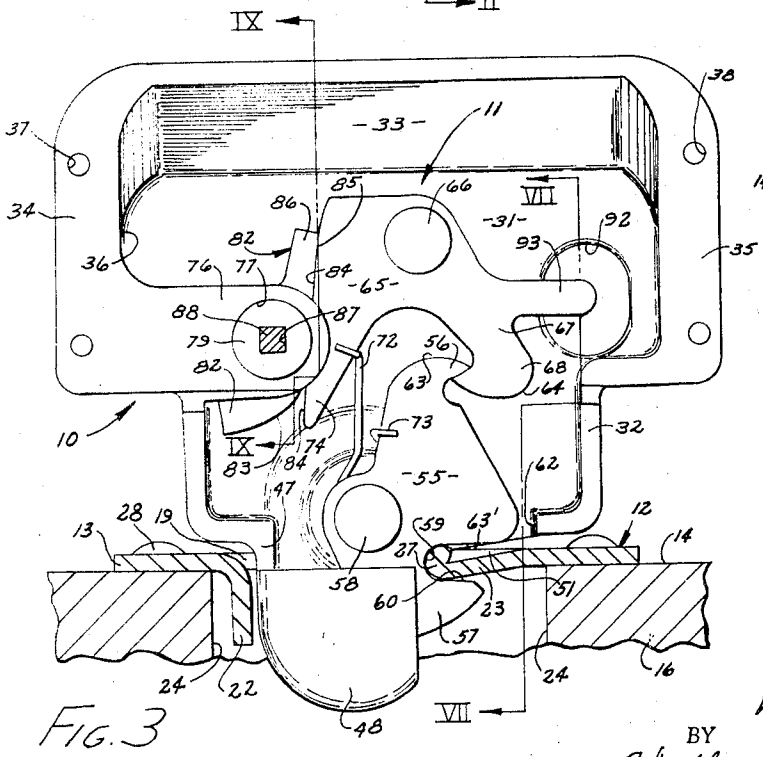

FIG. 3

INVENTOR.
VERNON O. SMITH
BY
Woodhams, Blanchard & Flynn
ATTORNEYS

DOOR LATCH ASSEMBLY

Filed Oct. 16, 1967 Sheet 2 of 3

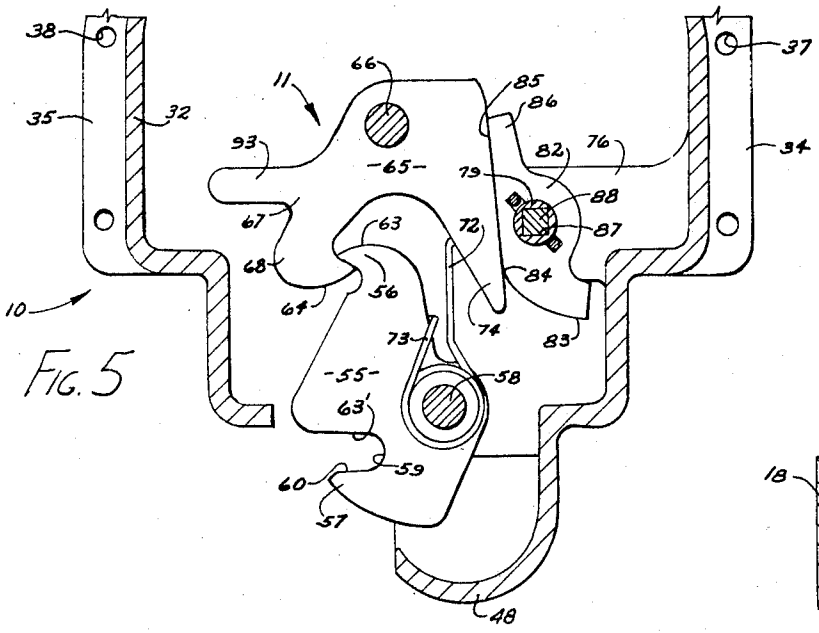

FIG. 5

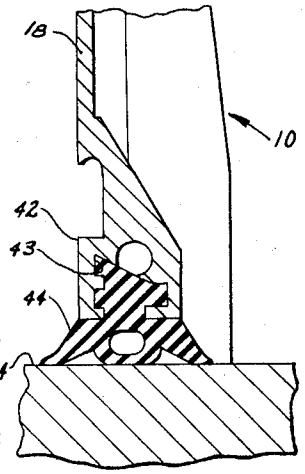

FIG. 4

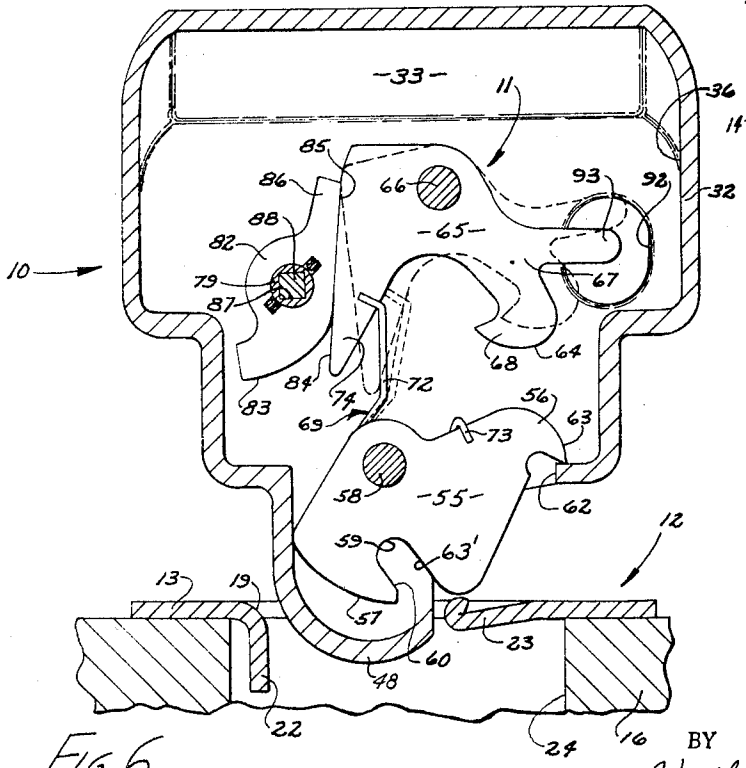

FIG. 6

INVENTOR.
VERNON O. SMITH
BY
Woodhams, Blanchard & Flynn
ATTORNEYS

DOOR LATCH ASSEMBLY

Filed Oct. 16, 1967 Sheet 3 of 3

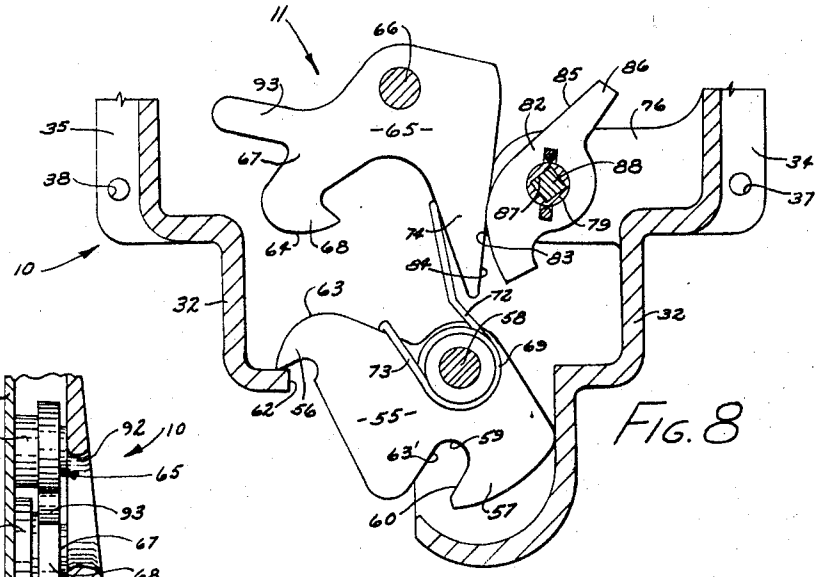

FIG. 8

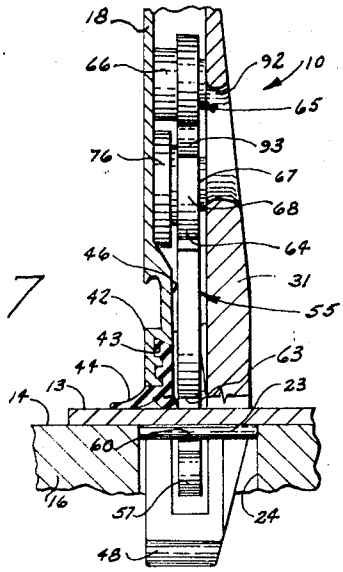

FIG. 7

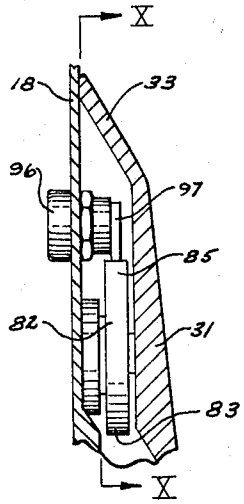

FIG. 9

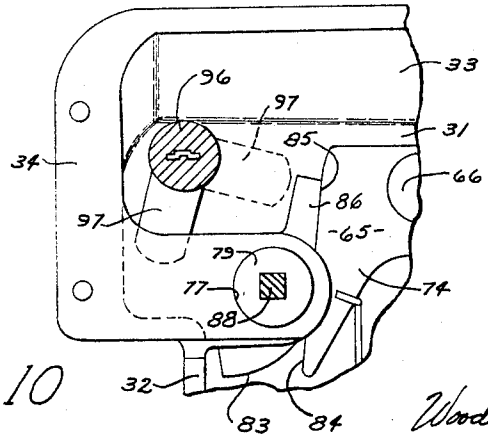

FIG. 10

INVENTOR.
VERNON O. SMITH
BY
Woodhams, Blanchard & Flynn
ATTORNEYS

United States Patent Office

3,439,948

Patented Apr. 22, 1969

1

3,439,948
DOOR LATCH ASSEMBLY

Vernon O. Smith, Ashley, Ohio, assignor to Overhead Door Corporation, Marion, Ohio, a corporation of Indiana

Filed Oct. 16, 1967, Ser. No. 675,516
Int. Cl. E05c 3/06, 3/16
U.S. Cl. 292—216 5 Claims

ABSTRACT OF THE DISCLOSURE

A shallow housing, open on one side, has narrow edges adapted for securement to the side of a sliding door adjacent the closing edge thereof which engages a casing. A latch mechanism within the housing has a latch with first hook means engageable with a catch mounted upon the casing, and second hook means engageable by third hook means on a lever which holds the latch in its catch-engaging position. A cam is arranged to move the lever out of its latch-holding position and lock means controls movement of the cam. An arm on the lever is engageable from the interior side of the door to move the lever out of the latch-holding position.

BACKGROUND OF THE INVENTION

This invention relates in general to a latch assembly for a door which slides or moves substantially within a plane as it approaches the closed position and, more particularly, to a latch for an upwardly acting truck door wherein said latch is automatically moved into the latched position as the door is lowered into its closed position, said latch being adapted for normal release from the external side of the door and emergency release from the interior side of the door.

It has been common practice for many years to use upwardly acting doors on the access openings of truck vans wherein each door comprises a plurality of horizontally hinged, relatively narrow sections. Said doors are guided in their movement between a substantially vertical, closed position and a substantially horizontal open position by means of rollers mounted on the ends of the sections and engaged in suitable tracks, which extend along the opposite edges of said doors. Many types of latch and lock assemblies have been developed for such doors and, in general, have served their purposes. However, there has been a need for a lightweight, inexpensive latch assembly capable of latching automatically as the door is moved into the closed position, but which is constructed so that additional features, such as lock tumblers and the like, can be added without modification of the basic latch assembly.

Further, many trucks having closed vans are equipped with one access opening to such van. Accordingly, there are known instances when personnel have been trapped within the van because the door closed accidentally and because the latch mechanism was not accessible from within the van. For this reason, the use of latch assemblies which are automatically latched when the door moves into the closed position have not received widespread acceptance for use in certain types of truck applications.

It is common knowledge that valuable merchandise is often removed from "locked" truck vans largely because it is frequently necessary to park trucks for extended periods of time where they cannot be watched. Accordingly, it is standard practice to fabricate the latch and/or lock mechanisms from exceptionally heavy-duty materials which cannot be easily tampered or broken to gain access to the interior of the truck van. However, by placing the entire latch mechanism upon the interior side of the door,

2

a relatively lightweight and inexpensive latch mechanism can be made to serve as effectively as the ponderous structures presently used on the external side of the door, and with less chance of permitting unauthorized entry.

Accordingly, a primary object of this invention is the provision of a latch assembly which is adapted for mounting upon the interior side of an upwardly acting truck van door, which is capable of latching automatically as the door is moved into the closed position, which can be fabricated from a minimum number of lightweight, but adequately strong, and relatively inexpensive parts, which can be quickly and easily mounted upon the door, which can be opened from within the van of the truck, and which can be easily equipped with a lock for positively preventing opening of the latch mechanism from the exterior of the door.

A further object of the invention is the provision of a latch assembly, as aforesaid, which is constructed so that it will not interfere with the movement of the door, which will not become jammed against the load within the truck van, which will not interfere with or destroy the effectiveness of the weatherseal along the closing edge of the door and which eliminates the need for any structure extending beyond the exterior surface of the door upon which it is mounted.

Other objects and purposes of the invention will become apparent to persons familiar with this type of equipment upon reading the following descriptive material and examining the accompanying drawings, in which:

FIGURE 1 is a front elevational view of the latch assembly of the invention attached to fragments of an upwardly acting truck door and the threshold therefor.

FIGURE 2 is a sectional view taken along the line II—II in FIGURE 1 with the latch assembly in the closed position.

FIGURE 3 is a sectional view taken along the line III—III in FIGURE 2.

FIGURE 4 is a sectional view taken along the line IV—IV in FIGURE 1.

FIGURE 5 is a fragmentary, sectional view taken along the line V—V in FIGURE 2.

FIGURE 6 is a sectional view taken along the line VI—VI in FIGURE 2 showing the latch mechanism shortly after it has been manually released.

FIGURE 7 is a sectional view taken along the line VII—VII in FIGURE 3.

FIGURE 8 is a fragment of FIGURE 5 showing the latch mechanism shortly after it has been unlatched by the normal procedure.

FIGURE 9 is a sectional view taken along the line IX—IX in FIGURE 3 with a lock mechanism added.

FIGURE 10 is a sectional view taken along the line X—X in FIGURE 9.

For purposes of convenience in description, the terms "upper," "lower," "front," "rear" and words of similar import will have reference to the latch assembly of the invention as appearing in FIGURE 1, which shows the front side of the assembly. The terms "inner," "outer" and derivatives thereof will have reference to the geometric center of said latch assembly and parts thereof.

Specific reference is made herein to an adaptation of the invention for use with an upwardly acting door of a truck van because it was from a need in this field that the invention developed. However, it will be recognized that said latch mechanism is equally applicable to other types of door constructions and other specific uses.

SUMMARY OF THE INVENTION

The objects and purposes of the invention, including those set forth above, have been met by providing a door latch assembly comprised of a latch mechanism disposed within a housing mounted upon the interior surface of a

door near the closing edge thereof, and a catch mounted upon the casing of threshold of the door for engagement by the latch mechanism so that the assembly is automatically latched when the door is closed. While the disclosed embodiment is particularly designed for use with an upwardly acting door on a truck van, the assembly can be used on any type of door structure wherein the final portion of the closing movement of the door against a casing or threshold is substantially planar. The housing is provided with an opening through which an arm on the latch mechanism can be reached for unlatching the mechanism from within the van, even when the door is locked.

DETAILED DESCRIPTION

The latch assembly of the invention, a preferred embodiment of which is shown in FIGURES 1 and 3, is comprised of a housing **10**, in which the latch mechanism **11** is mounted, and a catch unit **12** which the latch mechanism **11** is adapted to engage.

The catch unit **12** is comprised of a substantially rectangular mounting plate **13** which is secured upon the surface **14** of the bed **16** of a conventional truck van having an upwardly acting door **17** consisting of a plurality of horizontally hinged door sections **18**. The mounting plate has a substantially rectangular opening **19** which is produced by striking out two adjacent portions **22** and **23** from the central part of the plate **13**. The portion **22** is preferably bent so that it is approximately perpendicular to the plane of the plate **13** and extends downwardly into an aligned opening **24** in the bed **16**. The portion **23** at the opposite end of the opening **19** is bent downwardly slightly into the opening **24** and the inner edge **27** of portion **23** is folded upon itself to form a catch, which is engaged by the latch mechanism **11**. The mounting plate **13** may be secured to the truck bed **16** by rivets **28**, by welding or the like.

The housing **10** is comprised of a substantially planar front wall **31** and a narrow peripheral wall **32** which extends rearwardly from the front wall **31** and defines therewith a shallow cavity **36**. The upper portion **33** of the peripheral wall **32** slopes downwardly and frontwardly to avoid jamming with a load adjacent to the door **17** when it is opened. The peripheral wall **32** has outwardly extending flanges **34** and **35** on the upper leftward and rightward sides thereof, as appearing in FIGURE 3, through which the openings **37** and **38**, respectively, are pierced for the purpose of receiving rivets **41** (FIGURE 1) by which the housing **10** is rigidly secured to the lowermost door section **18**.

As shown in FIGURE 4, said lowermost door section **18** has an enlarged lower edge portion **42** containing a downwardly opening groove **43** of irregular cross section for receiving the upper lateral edge of an elongated sealing element **44** having a corresponding cross section. As shown in FIGURE 2, parts of the enlarged edge portion **42** and the sealing element **44** are cut off or recessed to blend with the front surface **46** on the section **18**, which is engaged by the recessed rear edge **47** of the lower portion of the peripheral wall **32**.

The housing **10** has an integral, downwardly projecting latch guard **48** which opens upwardly and rightwardly, as appearing in FIGURE 3. The width of the latch guard **48** is slightly less than the distance between the adjacent edges of the portions **22** and **23** of the catch unit **12**, and the thickness of the latch guard **48** is slightly less than the distance between the front and rear edges **51** and **52** of the opening **19** in the plate **13**. Thus, the latch guard **48** can move freely through th opening **19** during a latching or unlatching operation, as discussed hereinafter.

A latch **55** having upper and lower sidewardly projecting hooks **56** and **57** on the rightward side thereof, as appearing in FIGURE 3, is pivotally supported between said hooks upon the pivot pin **58** which is rigidly mounted upon the front wall **31** slightly above the latch guard **48**. The lower hook **57** is disposed within the latch guard **48** when the latch mechanism is in the unlatched position, as shown in FIGURES 6 and 8. However, when the latch **55** is in the latched position, as shown in FIGURES 3 and 5, the hook **57** projects from the latch guard **48** so that the catch element **27** is snugly disposed within the recess defined by the upper edge **60** of the hook **57** and the opposing lower edge **63'** of the latch **55**. Part of the lower edge of the peripheral wall **32** is omitted to provide a latch opening **62** therein adjacent the latch guard **48**.

A latch-retaining lever **65**, which is substantially inverted U-shaped, is pivotally supported near the upper end thereof upon the pivot pin **66** which is rigidly secured to the front wall **31** of the housing **10**. The rightward leg **67** (FIGURE 3) of the lever **65** has a hook **68** which is engageable with the upper hook **56** of latch **55** so as to positively oppose clockwise rotation of the latch **55**. The upper edge **63** of hook **56** and the lower edge **64** of hook **68** are curved to facilitate their engagement when the latch **55** moves into engagement with the catch **27**.

A spring **69**, which encircles the pivot pin **58** (FIGURE 2), has its upwardly projecting ends **72** and **73** engaged respectively with and bearing against adjacent sides of the left leg **74** of the retaining lever **65** and the latch **55** above the pivot pin **66**. Accordingly, the spring **69** continuously urges the hooks **56** and **68** into or toward engaged positions.

The housing **10** has an integral flange **76** which projects rightwardly (FIGURE 3) from the flange **34** to a point adjacent the leg **74** of the retaining lever **65**. The flange **76** has an opening **77** coaxial with an opening **78** in the front wall **31** (FIGURE 1) for rotatably receiving the shaft **79** upon which the actuating cam **82** is rigidly secured between the flange **76** and the front wall **31**. The cam **82** has a downwardly and rightwardly facing arcuate edge **83** which is snugly but slideably engageable with the substantially upright leftward edge **84** of the left leg **74** on the retaining lever **65**. The cam **82** also has an upwardly projecting integral element **86** with a flat right edge **85** engageable with said edge **84** to prevent clockwise rotation of the cam **82** beyond its FIGURE 3 position.

The shaft **79** has an out-of-round, substantially central opening **87** into which the shank **88** of a handle **89** (FIGURE 2) can be removably received for turning the actuating cam **82** in a counterclockwise direction (FIGURE 3) away from its position of FIGURE 3 into its position of FIGURE 8. The spring **69** continuously urges the left leg **74** against the adjacent edge of the actuating cam **82**.

The housing **10** has a finger opening **92** near the flange **35**, and the latch-retaining lever **65** has an integral arm **93** which extends over the opening **92** where it can be manually engaged to move the lever **65** out of its latch-retaining position.

As shown in FIGURES 9 and 10, a lock tumbler **96** can be rigidly secured to the door section **18** so that its locking cam **97** can be moved between its solid line, unlocked position (FIGURE 10) and its broken line locking position with respect to the upwardly projecting element **86** on the actuating cam **82**.

OPERATION

The operation of the above-described latch assembly will be apparent to persons skilled in the art from such description. However, for convenience, such operation will be summarized. Under normal circumstances, the latch mechanism **11** will be in the unlatched condition of FIGURE 1 or 6 when the door is open, and said latch mechanism will be in its latched position of FIGURES 3 and 5 when the door is closed.

As the door **17** (FIGURE 1) is moved downwardly toward the closed position, the latch guard **48** (FIGURE 6) moves through the opening **19** in the mounting plate **13** after which the edge **63'** of the latch **55**, engages the catch element **27**. Since the edge **63'** is rightwardly of the pivot pin **58**, continued downward movement of the door **17** pivots the latch **55** in a counterclockwise direc-

tion, as appearing in FIGURE 6, until the upper arcuate edge **63** of the upper hook **56** engages the lower arcuate edge **64** of the hook **68** on the lever **65**. The spring **69** constantly urges the left leg **74** of the lever **65** against the actuating cam **82**, whereby the lower edge **64** of the hook **68** is held in the path of the upper edge **63** of the hook **56** when the latch **55** is moved in a counterclockwise direction. As the latch **55** continues its counterclockwise movement (due to further downward movement of door **17**), the hook **56** slides along the hook **68** and the lever **65** is urged in a counterclockwise direction contrary to the urging of the spring **69**. When the lower edge of the hook **56** passes the upper edge of hook **68**, the lever **65** is pivoted in a clockwise direction by spring **69** and the hook **68** moves into locked engagement with the hook **56** as appearing in FIGURE 3, such movement being limited by engagement of the left leg **74** with the substantially flat right side **85** of the actuating cam **82**.

While the latch **55** and lever **65** are moving into latched engagement, as discussed in the foregoing paragraph, the catch **27** is being received into the recess **59** where it is firmly engaged by the hook **57** until the latch **55** is released by the lever **65** for clockwise rotation.

As shown in FIGURE 2, the rearward edge of the sealing strip **44** is compressed substantially by the mounting plate **13**. However, appropriate allowance is provided in the structure of the sealing element **44** to permit this while maintaining a firm seal elsewhere, as seen in FIGURE 4. If the mounting plate **13** is flush mounted, then the engagement between the rearward edge of sealing strip **44** and the upper surface **14** of the deck **16** will be as appearing in FIGURE 4 throughout the length of the sealing strip.

When it becomes desirable to open the door **17** in the normal manner, the handle **89** is turned so that it pivots the actuating cam **82** (FIGURE 3) in a counterclockwise direction whereby the arcuate edge **83** engages the left edge **84** of the leg **74** on lever **65** and thereby pivots said lever **65** in a counterclockwise direction into the position thereof appearing in FIGURE 8. As sooon as the hook **56** is released from its engagement with the hook **68**, due to the pivotal movement of the lever **65**, the latch **55** is rotated in a clockwise direction by the spring **69** into the position of FIGURE 8 wherein the tip of the hook **56** bears against the portion of the peripheral wall **32** adjacent the opening **62** therein and the closed end of the hook **57** bears against the extension of the peripheral wall **32** in the latch guard **48**.

As shown in FIGURE 8, the left leg **74** of the lever **65** will be urged by spring **69** against the adjacent edge of the actuating cam **82** as soon as the hook **56** releases the hook **68**. Thus, when the handle **89** is released, the leg **74** (FIGURE 8) will urge the counterclockwise rotation of the actuating cam **82** into its detent position of FIGURE 3. That is, the latch mechanism **11** will automatically reset itself, in the solid line position of FIGURE 6, for latching engagement with the catch **27** when the door **17** is again moved toward the catch unit **12**.

When the latch mechanism **11** is in latched engagement with the catch unit **12**, as appearing in FIGURE 3, an unlatching operation can also be performed by engaging the arm **93**, either manually or by an instrument, through the opening **92** and thereafter raising the arm **93** until the hook **56** releases the hook **68** after which the subsequent operation of the latch mechanism may be identical with that discussed above following the normal operation of the latch mechanism by the handle **89**. As soon as the engagement of the arm **93** is released, the latch mechanism **11** will move toward its solid line position of FIGURE 6, so that it is set for a subsequent latching operation when the door **17** is moved downwardly. The left edge **84** of the left leg **74** is shaped so that the lever **65** can be rotated in a counterclockwise direction, as appearing in FIGURE 3, without interference from or movement of the actuating cam **82**.

As shown in FIGURES 9 and 10, it may be desirable to provide a tumbler and locking cam in association with the latch mechanism **11** to prevent unauthorized opening of the door **17** by turning the handle **89**. When the locking cam **97** is in its broken line position of FIGURE 10, it is substantially perpendicular to the initial direction of movement of the adjacent outer end of the element **86** on the actuating cam **82**. Accordingly, counterclockwise unlatching movement of the actuating cam **82** is positively prevented by said cam **97**. Clockwise unlatching movement of the actuating cam **82** is positively prevented by engagement between the edge **85** of the cam **82** and the edge **84** of lever leg **74**.

By moving the locking cam **97** into its solid line position of FIGURE 10, it no longer obstructs the counterclockwise movement (FIGURE 10) of the actuating cam **82** in effecting an unlatching operation of the latch mechanism **11**. Moreover, since it is unnecessary to move the actuating cam **82** when the latching mechanism **11** is manually operated by the arm **93**, an emergency opening of the latch mechanism **11** by the arm **93** can be effected when the cam **82** is locked in its FIGURE 3 position by cam **97**.

Under some circumstances, it may be desirable to indicate that there has been an emergency operation of the latch mechanism **11** by the arm **93**, particularly where there is another means of gaining access to the interior of the truck van. In such case, the opening **92** may be covered with a sealing material which must be broken or otherwise mutilated in order to achieve access to the arm **93**.

Although particular preferred embodiments of the invention have been disclosed above for illustrative purposes, it will be understood that variations or modifications of such disclosure, which come within the scope of the appended claims, are fully contemplated.

The embodiments of the invention in which an exclusive property or privilege is claimed are defined as follows:

1. A latch assembly for a sliding door on a truck van, said door being movable within a plane substantially toward and away from a jamb and having an edge engageable with said jamb when said door is in the closed position, said door further having an inside surface confronting the interior of said truck van and an outside surface on the side thereof opposite said inside surface, comprising:

housing means having a sidewall and a peripheral wall defining a shallow cavity, said peripheral wall having the free edge thereof adapted for securement to the inside surface of said door near said edge thereof whereby said cavity is covered;

catch means mounted upon said jamb;

latch means supported upon said housing means and coacting between said catch means and said door for maintaining said door in the closed position, said latch means including a latch member pivotally supported upon said housing means within said cavity and having first and second hook portions thereon, said first hook portion being adapted to engage said catch means when said edge of said door is closely adjacent said jamb, disengagement of said latch means from said catch means being effected by pivotal movement of said latch member in one direction from a latched position to an unlatched position, said latch member further having a cam surface thereon coacting with said catch means for effecting pivotal movement of said latch member in the opposite direction from said unlatched position toward said latched position when said edge of said door is moved into a position adjacent said jamb;

first resilient means continuously yieldably urging said latch member in said one direction toward said unlatched position;

lever means pivotally supported upon said housing within said cavity, said lever means having a third

hook portion engageable with said second hook portion when said lever means is in a retaining position for positively maintaining said latch member in said latched position and preventing pivotal movement thereof in said one direction;

second resilient means continuously yieldably urging said lever means toward said retained position wherein said third hook portion is engageable with said second hook portion;

actuating cam means pivotally supported upon said housing means within said cavity and coacting with said lever means for moving same out of said retaining position whereby said third hook portion disengages said second hook portion for permitting said first resilient means to pivotally move said latch member in said one direction toward said unlatched position;

manually actuatable handle means positioned adjacent the outside surface of said door for permitting said latch member to be moved in said one direction from said latched to said unlatched position, said handle means including a portion extending through said door and fixedly connected to said cam means for pivotally moving same;

means defining a small opening in the sidewall of said housing for permitting communication between the cavity within said housing and the interior of said truck van; and

said lever means further having a manually actuatable portion positioned adjacent to and in substantial alignment with said opening when said lever means is in said retaining position, said manually engageable portion being accessible and manually engageable through said opening for permitting said lever means to be moved away from said retaining position whereby said latch member can be disengaged from within the interior of said truck van.

2. A latch assembly according to claim **1**, wherein said housing is substantially narrow and the sidewall thereof is substantially planar, and wherein said peripheral wall means has an upper portion which slopes downwardly and outwardly from the inside surface of said door so as to avoid jambing of said door with a load positioned within the truck van when the door is being opened.

3. A latch assembly according to claim **1**, wherein said housing has a latch guard integrally fixed thereto and projecting beyond the edge of said door, said latch guard having substantially parallel front and rear wall members defining a cavity therebetween in which is received said first hook portion when said latch member is in said unlatched position, whereby said latch member is thus protected when the door is in the open position.

4. A latch assembly according to claim **1**, including lock means pivotally supported within said cavity for movement into and out of a position with respect to said cam means for positively preventing movement of said cam means when said cam means is holding said lever means in said retaining position.

5. A latch assembly according to claim **1**, wherein said lever means comprises a substantially U-shaped lever member having a pair of legs integrally joined by a base portion with said base portion being pivotally connected to said housing, one of said legs having said third hook portion integrally formed thereon, the other of said legs coacting with and being contacted by said cam means for permitting said cam means to move said lever means away from said retaining position; and

spring means coacting between said latch member and the other leg of said lever member, one end of said spring constituting said first resilient means and being connected to said latch member for biasing same in said one direction, the other end of said spring constituting said second resilient means and being connected to the other leg of said lever means for biasing same into said retaining position.

References Cited

UNITED STATES PATENTS

2,153,102	4/1939	Smith	292—180
2,194,408	3/1940	Sluss	292—101
2,727,774	12/1955	Marple et al.	292—216
3,023,804	3/1962	Howell	49—488 X
3,103,805	9/1963	Crosswell	70—142
3,170,722	2/1965	Schutte	292—216 X
3,236,551	2/1966	Nash	292—216 X

RICHARD E. MOORE, *Primary Examiner.*